PJM Manual 12:

Balancing Operations

Revision: 58

Effective Date: December 1, 2026

Prepared By
Dispatch

PJM © 2026

Table of Contents

Table of Exhibits 4

Approval 5

Current Revision 6

Introduction 8

About PJM Manuals 8

About This Manual 8

Using This Manual 9

Section 1: Overview 10

1.1 Scope and Purpose of Dispatching 10

1.2 PJM Responsibilities 10

1.3 PJM Member Responsibilities 12

Section 2: Dispatching Tools 13

2.1 Control Center Tools 13

Section 3: System Control 16

3.1 Adjusting PJM Balancing Area-Scheduled Resources 16

3.2 Time Error 27

3.3 External Transactions Scheduling - Deleted (Section 2.1 of the Regional Transmission and Energy Scheduling Practices document is the official source of this information) 28

3.4 External Transaction Scheduling Business Rules – Deleted (Section 2.2 of the Regional Transmission and Energy Scheduling Practices document is the official source of this information) 28

3.5 Inadvertent Interchange 28

3.6 Primary Frequency Response 30

Section 4: Providing Ancillary Services 32

4.1 Reserves 32

4.2 Simultaneous Activation of Reserves (NPCC) 35

4.3 Regulation 37
4.4 Qualifying Regulation Resources 44
4.5 Black Start Service 51

Section 5: Transmission Facility Control 67

5.1 Corrective Control Strategies 67
5.2 Reactive Limitation Control 71
5.3 Voltage Control 72
5.4 Thermal Overloaded Transmission 75
5.5 Stability Limited Generation 77

Attachment A: PJM Instantaneous Reserve Check 78

IRC – Definitions of Terms/Calculations 78

Attachment B: Transmission Constraint Control Guidelines 82

B.1 Non-Cost Measures 82
B.2 Generation Re-dispatch 83
B.3 Analyzing and Controlling Non-Market BES Facilities 85

Attachment C: PJM Black Start Test Report Form 89

Attachment D: Disturbance Control Performance/Standard 90

Attachment E: PJM Reporting of NERC BAL Standard 92

E.1 Daily Data Support for BAL-001,BAL-002, BAL-003, and BAL-005, Reporting 92
E.2 PJM Frequency Bias 92

Attachment F: Dynamic Transfers 94

F.1 Background 94
F.2 Dynamic Transfer Request Process Flow 95
F.3 PJM EMS Modeling Requirements for Implementing Pseudo-Ties 100
F.4 Generation Dynamic Transfer Business Rules 100
F.5 Dynamic Transfer Requirements Summary 108
F.6 References 113

Revision History **115**

Table of Exhibits

Exhibit 1: Calculation of PJM ACE 18

Exhibit 2: PJM Regulation Signal 22

Exhibit 3: ~~Resource Dispatching~~ 23

Exhibit 4: Real Time Market Application Process Flow 24

Exhibit 5: PJM Member Interface 26

Exhibit 6: Assigned Regulation and Regulation Range Requirements 38

Exhibit 7: Limit Relationship for Regulation 39

Exhibit 8: ~~Regulation Assignment~~ 42

Exhibit 9: Corrective Control Strategies 67

Exhibit 10: Power System Limits 70

Exhibit 11: PJM Instantaneous Reserve Check Terms and Relationships 78

Exhibit 12: Definitions of PJM Instantaneous Reserve Check Terms 79

Exhibit 13: Sample Completed Instantaneous Reserve Check Company Unit Data 80

Exhibit 14: Partial Unit Dynamic Transfer Methods 101

Exhibit 15: Dynamic Transfer Requirements Summary 109

Approval

Approval Date: 04/22/2026
Effective Date: 12/01/2026~~04/22/2026~~

Paul Dajewski, Sr. Manager, Dispatch

Current Revision

Revision 58 (12/01/2026):

- Revised language to accommodate two new market products, Regulation-Up and Regulation-Down in Sections 3.1.2, 3.1.3, 4.3 and 4.4.
- Updated definitions for Markets Database, Dispatch Management Tool and PI Vision in Section 2.1.2.
- Removed Resource Dispatching Exhibit and Regulation Assignment Exhibit as these exhibits are not relevant anymore.
- Updated PJM Member Interface Exhibit and Assigned Regulation Exhibit to accommodate RegUp and RegDn.
- Removed irrelevant sentence related to synchronized reserves and regulation in Section 4.1.2.

~~**Revision 57 (04/22/2026):**~~

- ~~Periodic Review updated to address:~~
  - ~~Updated manual ownership from Kevin Hatch to Paul Dajewski~~
  - ~~Cover-to-cover changes: Corrected punctuation, spelling and grammar, changed from exhibit numbers to exhibit titles in body, updated BAL-001, BAL-002, BAL-003, and BAL-005 for new revisions~~
  - ~~Removed references to retired NERC standards INT-001-3 and INT-004-3.1~~
  - ~~Removed "Dispatching Timeline" exhibit from Section 1.1~~
  - ~~Updated Section 2.1.2 to remove Hydro Calculator, changed PI Process Book to PI Vision, and added Transient Stability Analysis~~
  - ~~Updated Section 2.1.3 Phone Recording Device description~~
  - ~~Updated Section 3.1.1 PJM Area Control Error~~
  - ~~Updated Real Time Data Sources in Section 3.1.2~~
  - ~~Updated to ensure time error correction All-Call is initiated in advance of the time error correction in Section 3.2.1~~
  - ~~Updated PJM Actions for loading synchronized reserves in Section 4.1.2~~
  - ~~Renamed Section 4.2 from Shared Reserves to Simultaneous Activation of Reserves (NPCC)~~

- ~~Changed shared reserves to activated reserves in Section 4.2~~
- ~~Removed specific control zones in Section 4.2~~
- ~~Updated Section 4.5.1 to include the specific Black Start Service Section of this manual~~

Introduction

Welcome to the PJM Manual 12, Balancing Operations. In this introduction, you will find information about PJM manuals, an overview of this manual and information on how to use it.

About PJM Manuals

The PJM manuals are the instructions, rules, procedures and guidelines established by PJM for the operation, planning and accounting requirements of the PJM RTO and the PJM Energy Market. The manuals are grouped under the following categories:

- Transmission
- PJM Energy Market
- Generation and transmission interconnection
- Reserve
- Accounting and billing
- PJM administrative services

For a complete list of all PJM manuals, go to the Library section on pjm.com.

About This Manual

PJM Manual 12, Balancing Operations, is one of a series of manuals within the PJM Energy Market manuals. This manual focuses on the activities that occur in the real-time operation of the PJM Energy Market. The manual describes how PJM dispatches and controls Capacity Resources, and how PJM monitors transmission facilities. It also describes how PJM provides Ancillary Services.

Manual 12 consists of five sections and six attachments. Both the sections and the attachments are listed in the table of contents beginning on page 2.

Intended Audiences

The intended audiences for the Manual 12 are:

- PJM Members – Any participant requesting to purchase or sell energy to or from the PJM Energy Market, and any participant that schedules bilateral sales or purchases.
- PJM operations staff – PJM operations staff monitors the performance of the Capacity Resource.
- PJM dispatchers – PJM dispatchers are responsible for the reliable operation of the PJM RTO and for posting information in the OASIS. “PJM dispatchers” refers to PJM dispatchers located in all PJM control centers.

- Transmission Owners/Generation Owners – The Transmission Owners'/Generation Owners' system operators/dispatchers direct operation of the local facilities, and communicate with PJM dispatchers to coordinate the operation of the Bulk Power System.

References

The references to other documents that provide background or additional details directly related to Manual 12 are:

- NERC Operating Manual
- PJM Manual 1, Control Center and Data Exchange Requirements
- PJM Manual 3, Transmission Operations
- PJM Manual 10, Pre-Scheduling Operations
- PJM Manual 11, Energy & Ancillary Services Market Operations
- PJM Manual 13, Emergency Operations
- PJM Manual 28, Operating Agreement Accounting
- Regional Transmission and Energy Scheduling Practices

Using This Manual

We believe that explaining concepts is just as important as presenting the procedures. This philosophy is reflected in the way we organize the material in this PJM manual. We start each section with an overview. Then, we present details and procedures, or references to procedures found in other PJM manuals. The following provides an orientation to the manual's structure.

What You Will Find in This Manual

- Table of contents that lists two levels of subheadings within each of the sections and attachments
- Approval page that lists the required approvals and a brief outline of the current revision
- Sections containing the specific guidelines, requirements or procedures including PJM actions and PJM Member actions
- Attachments that include additional supporting documents, forms or tables
- Section at the end detailing all previous revisions of this PJM manual

Section 1: Overview

Welcome to the Overview section of the PJM Manual 12, Balancing Operations. In this section, you will find the following information:

- A description of the scope and purpose of dispatching (see Scope and Purpose of Dispatching)
- A list of PJM dispatching responsibilities (see PJM Responsibilities)
- A list of the PJM Member's dispatching responsibilities (see PJM Member Responsibilities)

1.1 Scope and Purpose of Dispatching

Operation of the PJM RTO involves many activities that are performed by different operating and technical personnel. These activities occur in parallel on a continuous basis, 24 hours a day and can be grouped into three overlapping time frames:

- Pre-Scheduling Operations
- Scheduling Operations
- Dispatching Operations

In PJM Manual 12, Balancing Operations, we focus mainly on the Dispatching Operation activities that take place in the current hour of the Operating Day.

Dispatching includes system control, Ancillary Service monitoring, and transmission system monitoring and control. During the dispatching process, PJM implements and adjusts the current operating plan, which is developed during the scheduling process, to maintain reliability and minimize the cost of supplying the energy, reserves and other services that are required by the PJM Members and the operation of the PJM RTO. The current operating plan is developed within the guidelines and rules of the Day-Ahead Market.

In this manual we make no special distinction between the terms "price" and "cost." PJM Members submit their bids according to either actual cost or offer price, as designated by PJM for each generation resource. For specific information as to the use of price and cost, refer to the Markets Database section of PJM Manual 11, Energy & Ancillary Services Operation.

1.2 PJM Responsibilities

PJM monitors and controls the PJM RTO such that the least-cost means of satisfying the projected hourly energy, Operating Reserves (the amount of generating capacity scheduled to be available for a specified period of an Operating Day), and other Ancillary Services requirements of the Market Buyers (Members that have met reasonable creditworthiness standards established by the Office of the Interconnection and that are otherwise able to make

purchases in the PJM Interchange Energy Market), including the reliability requirements of the PJM Balancing Authority Area, are met. Specifically, PJM's responsibilities to support dispatching activities include:

- Directing PJM Members to adjust the output of any PJM RTO-scheduled resource; commit unscheduled PJM RTO resources; cancel selection of PJM Balancing Authority Area-scheduled resources.
- Operating the PJM RTO transmission system in accordance with NERC and regional reliability council standards and procedures.
- Committing the most cost efficient Regulation and Synchronized Reserve resources available.
- Implementing the PJM/MISO congestion management procedure for congested transmission facilities external to PJM RTO.
- Implementing the NERC Transmission Loading Relief (TLR) procedure as necessary to provide relief to external or internal transmission facilities.
- Verifying the accuracy of Locational Marginal Pricing (LMP) data during constrained/ unconstrained operations.
- Implementation of Emergency Procedures in accordance with PJM Manual M-13, Emergency Operations.

Note:
Synchronized Reserve: Section 1 Definitions of the PJM Operating Agreement (OA) defines Synchronized Reserves as the reserve capability of generation resources that can be converted fully into energy or Demand Resources whose demand can be reduced within 10 minutes from the request of the Office of the Interconnection dispatcher, and is provided by equipment that is electrically synchronized to the Transmission System. Synchronized Reserves are supplied from 10-minute synchronized generating resources (i.e., Synchronous Reserves) and 10-minute demand-side response resources.

1.2.1 PJM Communications

PJM dispatching operations are conducted from two control centers. The dispatchers in both control centers work together as a single team. The shift supervisor provides real-time leadership over dispatchers in both control centers. Communications between the control centers is facilitated through the use of closed-circuit TV through which dispatchers can communicate visually and orally in real time with their counterparts. System monitoring and control responsibilities are shared between the control centers.

1.3 PJM Member Responsibilities

Only Market Buyers and Market Sellers are eligible to submit offers and purchase energy or related services in the PJM Energy Market. The PJM Members include the Market Buyers and the Market Sellers.

1.3.1 Market Buyers

There are two general types of Market Buyers:

1. Internal Market Buyer: A Market Buyer that is purchasing energy from the PJM Energy Market for consumption by end-users that are located inside the PJM RTO. An Internal Market Buyer may be further classified as a Generating Market Buyer. A Generating Market Buyer is an Internal Market Buyer that owns or has contractual rights to the output of generation resources that are capable of serving the Market Buyer's load in the PJM RTO or selling energy-related services in the PJM Energy Market or elsewhere.
2. External Market Buyer: A Market Buyer that is making purchases of energy from the PJM Energy Market for consumption by end-users that are located outside the PJM RTO.

The Internal Market Buyer's dispatching responsibilities include satisfying its Regulation obligation from its own resources by one of these methods:

- Contractual arrangements with another PJM Member
- Purchases from the PJM Energy Market

1.3.2 Market Sellers

A Market Seller is a PJM Member that demonstrates to PJM that it meets the standards for the issuance of an order mandating the provision of transmission service under Section 211 of the Federal Power Act, submits an application to PJM, and is approved. By definition, all Market Buyers become Market Sellers upon approval of their applications.

Market Sellers' dispatching responsibilities include:

- Ensuring each Capacity Resource complies with energy dispatching signals and instructions that are issued by PJM
- Complying with Regulation signals and instructions that are issued by PJM

1.3.3 Load Serving Entities

A Load Serving Entity (LSE) is any entity that has been granted authority or has an obligation pursuant to state or local law, regulation, or franchise to sell electric energy to end-users that are located within the PJM RTO. An LSE may be a Market Buyer or a Market Seller.

Section 2: Dispatching Tools

Welcome to the Dispatching Tools section of Manual 12. In this section you will find the following information:

- A description of PJM Control Center tools used for dispatching and operations
- A description of the information that is passed on to Market Settlements

2.1 Control Center Tools

The tools that are currently used by PJM Operations staff are described according to three categories: PJM Energy Management System (EMS) computer applications, PC applications and ancillary tools. EMS is further described in PJM Manual 01, Control Center and Data Exchange Requirements, section 1, PJM Systems.

2.1.1 EMS Applications

- Automatic Generation Control (AGC) — This program runs every two seconds, calculating Area Control Error (ACE), Regulation control and economic dispatch.
- Security Analysis (SA) – This program runs approximately every 1 to 2 minutes and calculates the simulated post-contingency flows on a large number of monitored facilities on the PJM system for the loss of selected contingencies. An EMS alarm is generated for any SA post-contingency value that goes beyond, or falls back under, 100 percent of the monitored facility's Normal Limit (NL) of 80 percent of the monitored facility's Long-Term Limit (LT). Any facility with an SA value that is greater than 100 percent of the NL, or 80 percent of the monitored facility's LT, will be monitored in the SA thermals display of PJM's RTNA package.
- State Estimator (SE) – This program runs approximately every minute and provides simulated flows for the PJM system based on current topology and the availability of telemetered data. SE is used to provide the input to the market systems. An EMS alarm is generated for any SE value that goes beyond, or falls back under 92 percent of the monitored facility's NL. Any facility with an SE value that is greater than 92 percent of the NL will be monitored in the Actual Thermal Overload display, as well as the SA thermals display, of PJM's RTNA Package.
- Transfer Limit Calculator (TLC) – This program runs approximately every 4 to 5 minutes and establishes transfer limits for selected interfaces on the PJM system. It establishes the voltage collapse point for these interfaces and applies a suitable margin from the collapse point as the safe operating limit. TLC facilities are monitored continuously on PJM's RTO critical information display. In addition, an EMS alarm is generated whenever the SE megawatt flow for a transfer interface exceeds the recommended limit as calculated by TLC.

2.1.2 PC Applications

- Markets Database (MDB) —This database is used by PJM Market Operations~~the Day-Ahead and Market-Based Regulation Systems~~. Market Participants update the MDB continuously via XML and Web-based interfaces.
- Dispatch Management Tool (DMT) — The DMT enables PJM dispatchers to manage resource information, transmission constraint information and administer the ancillary service markets and operations~~Regulation Market~~. The DMT automatically logs resource status changes and provides an electronic source of logging information for Market Settlements.
- Real-Time Security Constrained Economic Dispatch (RT-SCED) – This application calculates security constrained economic dispatch solutions for presentation to the dispatchers. The dispatchers then select the best solution that utilizes least-cost dispatch while simultaneously controlling active transmission constraints.
- Intermediate-Term Security Constrained Economic Dispatch (IT-SCED) – This application utilizes projected system conditions to calculate commit/decommit resources on the system and provide a forward-looking dispatch trajectory for presentation to the dispatchers.
- eDART – Dispatcher Applications and Reporting Tool. This Internet-based system allows communication of system information between PJM and member company dispatchers, i.e. generation and transmission outage tickets.
- eDart Generation Checkout – This program compares unit schedule availability/bid data in Markets Gateway, unit outages submitted via Generator Ticket (eDart) and stated capability to ensure accurate market data and capacity/reserve projections.
- Scheduling Coordinator's Tool – Updates day-ahead generation forecasts and schedules from market databases with additional data from various input sources. This tool is utilized to project system reserves.
- Interchange Manager (IXM) – This program is used by PJM dispatchers and transaction coordinators to manage transaction information.
- ExSchedule – Internet-based system that allows PSEs to submit, revise and review energy schedules.
- Interchange Distribution Calculator (IDC) – IDC is a NERC-sponsored program, used in the Eastern Interconnection for the purpose of managing transactions. All interchange transactions are modeled in the IDC and the IDC calculates flow impacts of these transactions on each flowgate. If flow relief on any of these flowgates becomes necessary, the IDC is used to communicate which transactions will be modified or curtailed to provide the relief in accordance with business rules established in the NERC TLR procedure.
- Reliability Coordinator Information System (RCIS) – Internet-based system used to exchange operating information among Reliability Coordinators and Balancing Authorities.
- Smartlog – Database logging tool used by dispatch to log system events. This tool contains bridges from various systems to partially automate the logging process.

- ALL-CALL – Used by PJM operations staff to simultaneously disseminate information to transmission and generation control centers.
- Data Viewer – Internet-based system that allows the PJM dispatcher and participants to view current and projected system data and emergency procedures information.
- PI Vision – Internet-based ~~V~~visualization system that~~tool utilized to~~ displays telemetered data.
- Reliability Assessment and Commitment (RAC). The RAC performs a second resource commitment known as the RAC Run, which includes the updated offers, updated resource availability information and updated PJM load forecast information and load forecast deviation. The focus of this commitment is reliability and the objective is to minimize startup and no load costs for any additional resources that are committed.
- Dispatch Interactive Map Application (DIMA) is a real time, geospatial operations tool that enhances PJM dispatchers' situational awareness of the grid. DIMA enables dispatchers to see a variety of information layered together, including transmission line status, contingencies, transmission and generation equipment status, and current weather.
- Transient Stability Analysis (TSA) - TSA is utilized to project current and future period stability concerns.
- Performance Score Calculation Engine (PSCE) – is a Java application that calculates the interval and historic performance score of a resource's regulation response compared to the regulation signal sent by PJM. PSCE also calculates the mileage.

2.1.3 Ancillary Tools

- Informational TV – This TV is used to obtain weather and emergency information from selected local network and cable channels.
- Weather Data – Weather reports are printed from the Internet, as posted by the vendor.
- Direct Phone Lines – Direct telephone line communication is available between PJM, the local control centers, Load Serving Entities (LSEs) and between PJM and adjacent Balancing Authorities.
- Dynamic Mapboard – The dynamic mapboard displays selected system data, status of lines, transformers, capacitors and generators, and the results of security analysis of the bulk power transmission system.
- Phone Recording Device – Used to record all phone conversations within the control room.
- Satellite Communications – Push-to-talk all-call and direct point-to-point satellite communications exists with PJM participants and participating external entities as back-up communications.
- Phones/cell phones – Used for back-up communications.

Section 3: System Control

Welcome to the System Control section of Manual 12. In this section, you will find the following information:

- How PJM adjusts PJM RTO-scheduled resources
- How PJM corrects for time error
- How PJM corrects for accumulated inadvertent interchange

PJM, as the RTO, operates to maintain interconnection steady-state frequency within defined limits by balancing real power demand and supply in real time (per NERC Standard BAL-001-2, Real Power Balancing Control Performance), and ensures, as the Balancing Authority, its ability to utilize reserves to balance resources, and demand and return interconnection frequency within defined limits following a reportable disturbance (per NERC Standard BAL-002-3, Disturbance Control Standard - Contingency Reserve for a Recovery from a Balancing Contingency Event). Specifics are discussed as follows.

3.1 Adjusting PJM Balancing Area-Scheduled Resources

The PJM RTO must operate sufficient generating capacity under automatic control to meet its obligation to continuously balance its generation and interchange schedules with its load. It is also required to provide its contribution to frequency Regulation for the Eastern Interconnection.

Frequency deviates from schedule, because actual tie line power flow does not continuously match scheduled tie line power flow. This imbalance must be minimized so as not to impose the PJM RTO's control requirements on the interconnected system. Area Control Error (ACE) is a value that defines how well the PJM Balancing Area is meeting its obligation.

PJM frequency source under primary control is based on the use of a global positioning system (GPS)-based "truetime" device which is linked into the Energy Management System (EMS) providing two-second signal input for continuous frequency monitoring. The dispatcher has the ability to change the frequency source within EMS should the primary source become disabled. Should there be a need to control an ACE in multiple zones due to extreme operations, frequency sources can be selected by generation control zones as set up in EMS.

3.1.1 PJM Area Control Error

ACE is a measure of the imbalance between sources of power and uses of power within the PJM RTO. This imbalance is calculated indirectly as the difference between scheduled and actual net interchange, plus the frequency-bias contribution to yield ACE in megawatts. Two additional terms may be included in ACE under certain conditions – the time-error bias term and PJM dispatcher adjustment term (manual add). These provide for error compensation and automatic, inadvertent interchange payback, respectively.

The sign convention for power flow used at PJM is positive for power flow into PJM, in contrast to the NERC sign convention, in which power flow into a Balancing Authority Area is negative. This has been carried over into the PJM ACE calculation, which results in a positive ACE representing overgeneration and a negative ACE representing undergeneration. The Calculation of PJM ACE Exhibit shows the calculation of PJM ACE in block diagram form.

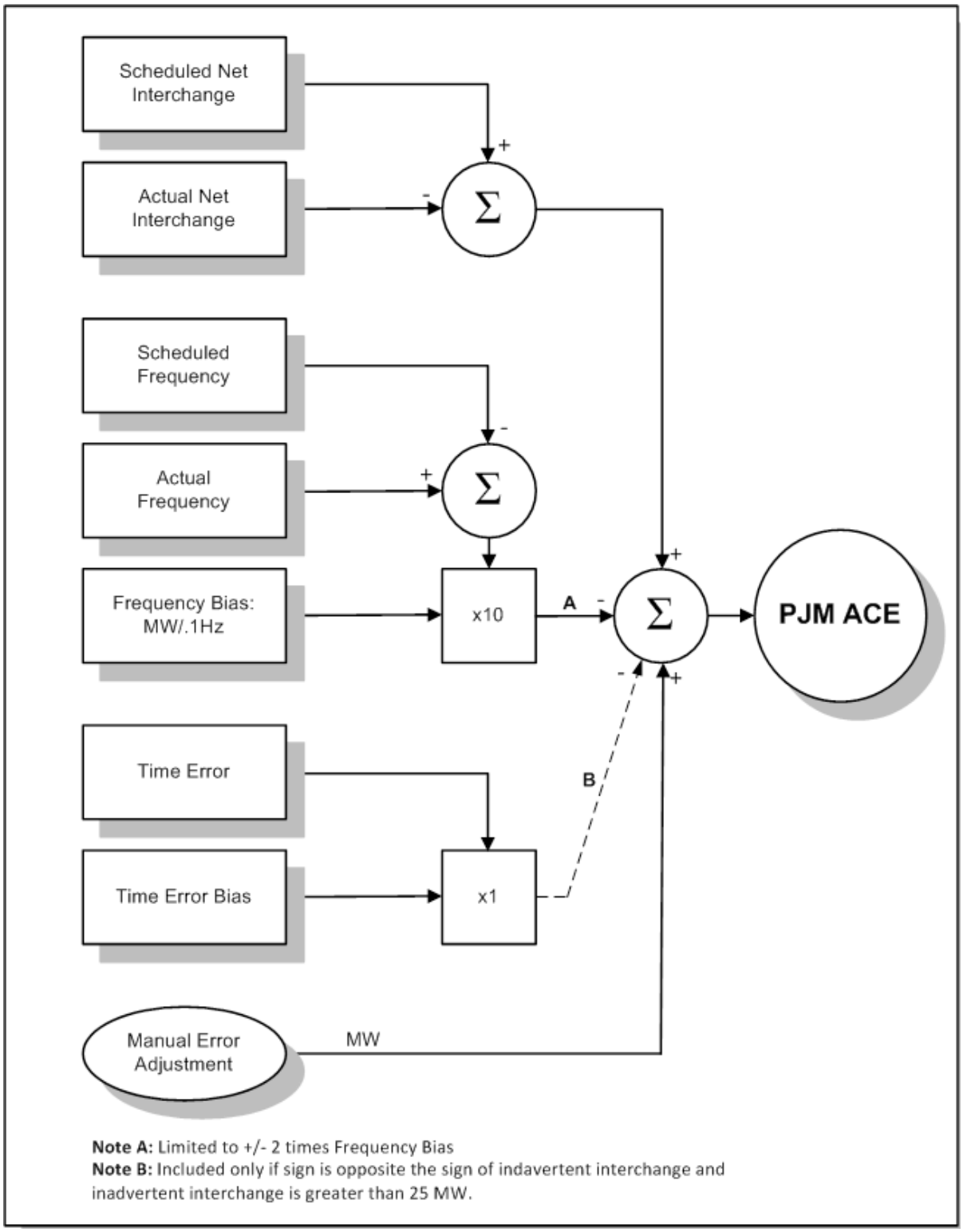
Scheduled Net Interchange
Actual Net Interchange
Scheduled Frequency
Actual Frequency
Frequency Bias: MW/.1Hz
x10
A
PJM ACE
Time Error
Time Error Bias
x1
B
Manual Error Adjustment
MW
Note A: Limited to +/- 2 times Frequency Bias
Note B: Included only if sign is opposite the sign of indavertent interchange and inadvertent interchange is greater than 25 MW.

Exhibit 1: Calculation of PJM ACE

Per NERC Standard BAL-001-2, Real Power Balancing Control Performance:

$$ACE = (NI_A - NI_S) - 10B(F_A - F_S) - I_{ME}$$

Where:

NI A	is the algebraic sum of actual flows on all tie lines (i.e., Actual Net Interchange)
NI S	is the algebraic sum of scheduled flows on all tie line (i.e., Scheduled Net Interchange)
B	is the Frequency Bias Setting (MW/0.1 H Z) for the Balancing Authority. The constant factor of 10 converts the frequency setting to MW/ H Z
F A	is the actual frequency
F S	is the scheduled frequency
I ME	is the meter error correction factor

ACE Control Modes

There are three modes of control available to PJM dispatchers for the operation of the PJM RTO.

- Flat Frequency Control – Flat Frequency Control utilizes only power system frequency as the controlling parameter. This mode of control only responds to frequency deviations and does not adjust operations for any interconnection tie line schedule deviations. This mode is applicable only to those instances when the PJM Balancing Authority Area becomes isolated from the Eastern Interconnection.
- Flat Tie Line Control – Flat tie Line Control utilizes only interconnection tie line flow as the controlling parameter. This mode of control only responds to net tie flow deviations and does not adjust operation for any frequency deviations. This mode is limited to special circumstances when the PJM Balancing Authority desires to maintain a given net

interchange flow, and the power system frequency is stable and being controlled by other Balancing Areas.

- Tie Line Bias Control – Tie Line Bias Control is the most widely used mode of control for multi-Balancing Area power systems. This mode of control responds to both frequency and net tie line flow deviations. The Calculation of PJM ACE Exhibit shows all of the calculations for Tie Line Bias Control. The frequency bias factor for the PJM RTO is set by interconnection agreement that is at least 1 percent of the yearly peak value and accomplishes the following:
    - Compensates for automatic governor action so that ACE does not “undo” the changes in generator output due to frequency fluctuations.
    - Compensates for any lack of PJM governor response by calculating an ACE that produces the PJM RTO’s agreed upon share of frequency support to the Eastern Interconnection.

NERC Control Performance Standard

The PJM RTO operates in accordance with NERC Resource and Demand Balancing (i.e., BAL) standards to ensure its capability to utilize reserves to balance resources and demand in real time and to return interconnection frequency within defined limits following a Reportable Disturbance. PJM satisfies the BAL standards by maintaining sufficient generating capacity under automatic control to satisfy its frequency-regulation obligation as a member of the Eastern Interconnection. NERC establishes definitive measures of control performance. These control performance standards are documented in the NERC in numerous BAL standards. The NERC Control Performance Standards (CPS) as presented in NERC Standard BAL-001-2 define a standard of minimum control performance for each Balancing Authority. The standards are summarized as follows:

- Continuous Monitoring – Each Balancing Authority monitors its control performance on a continuous basis against two standards:
    - Standard One: CPS1 – Over a year, the average of the clock-minute averages of a Balancing Area’s ACE divided by minus 10 B (where B is Balancing Area frequency bias) times the corresponding clock-minute averages of the interconnection’s frequency error must be less than a specific limit. This limit is a constant derived from a targeted frequency bound (limit) that is reviewed and set, as necessary, by NERC.
    - Standard Two: BAAL – The Balancing Authority ACE Limit (BAAL) operations evaluate the clock-minute average of reporting ACE does not exceed its clock-minute limit for more than 30 consecutive clock minutes.
- Disturbance Conditions – In addition to CPS1 and BAAL, the Disturbance Control Standard (DCS) as presented in NERC Standard BAL-002-3, Disturbance Control Standard - Contingency Reserve for Recovery from a Balancing Contingency Event, is used by each Balancing Authority to monitor control performance during recovery from Disturbance Conditions. The DCS states that ACE must return either to zero or to its pre-disturbance level within fifteen minutes following the start of the disturbance.

Measurements and Compliance – continuous monitoring is performed by PJM's Performance Compliance Department on a daily, monthly, quarterly and annual basis to ensure compliance with NERC BAL Standards. Performance data measurements are retained in electronic form per NERC BAL requirements.

- ACE Values – The ACE used to determine compliance to the CPS must reflect its actual value and exclude short excursions due to transient telemetering problems or other influences such as control algorithm action.
- System frequency used to determine compliance to CPS must reflect the actual value used in dispatch provided at full scan rate (minimum 4 seconds).
- CPS Compliance – Each Balancing Authority must achieve CPS1 compliance of 100 percent and not exceed 30 consecutive BAAL clock minutes. Daily reports are generated with CPS1 and BAAL preliminary information for dispatch.
- Performance Standard Surveys – All Balancing Authorities must respond to performance standard surveys that are requested by NERC; survey descriptions are found in Attachment E.
- Disturbance Control Standard Surveys – Each Balancing Authority must submit a quarterly summary report to the regional authority, NERC, documenting the control area's compliance to the DCS during the reporting quarter. Details provided in Attachment E reporting requirements for NERC Standard BAL-002-3.
- DCS Compliance – Each Balancing Authority must achieve DCS compliance 100 percent of the time for reportable disturbances.
- Reporting requirements for NERC BAL standards are found in Attachment E. PJM performs an annual review of measurement parameters and requirement thresholds per NERC and ReliabilityFirst standards.

Whenever the magnitude of ACE indicates a severe shortage of generation, a PJM dispatcher notifies PJM Members to immediately supply energy from their Synchronized Reserves. These requests are made via the PJM ALL-CALL communications software and via EMS ICCP data points.

3.1.2 PJM Control Implementation

PJM uses the PJM ACE signal to establish the required Regulation control signal that is sent to each PJM Member whose generating resources come under the direction of PJM. PJM develops two types of control signals as follows:

- Regulation
- Dispatch

Regulation Signal

PJM calculates one Regulation signal, as shown by the PJM Regulation Signal Exhibit. The Regulation control signal is a combination of Regulation-Up (RegUp) and Regulation-Down (RegDn).

- Regulation control signal (RegA) is low-pass filter of ACE. The Regulation control signal is sent to each resource owner. The resource owners receive the signal and then send the signal to each regulating resource.

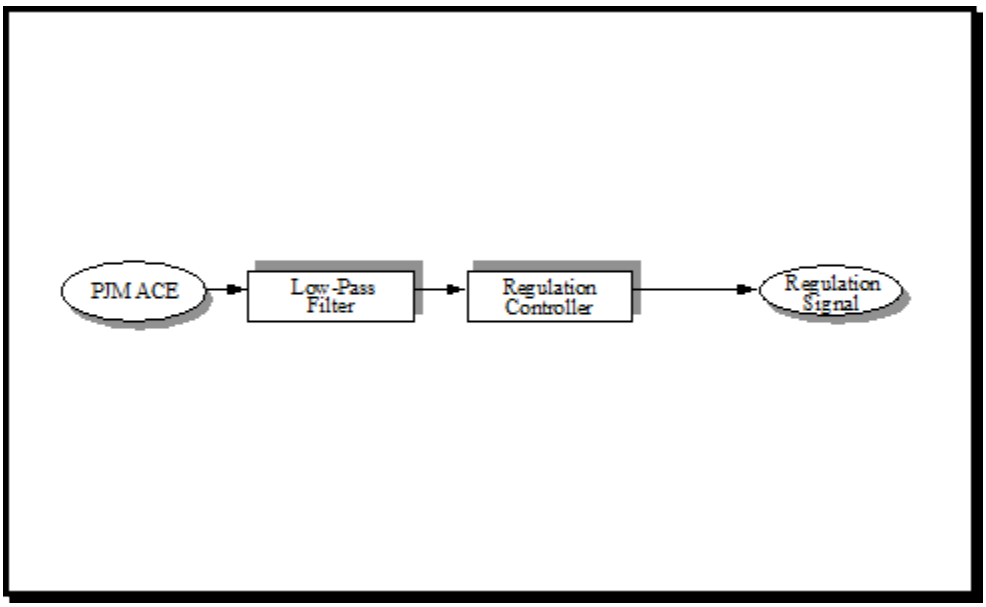

Exhibit 2: PJM Regulation Signal

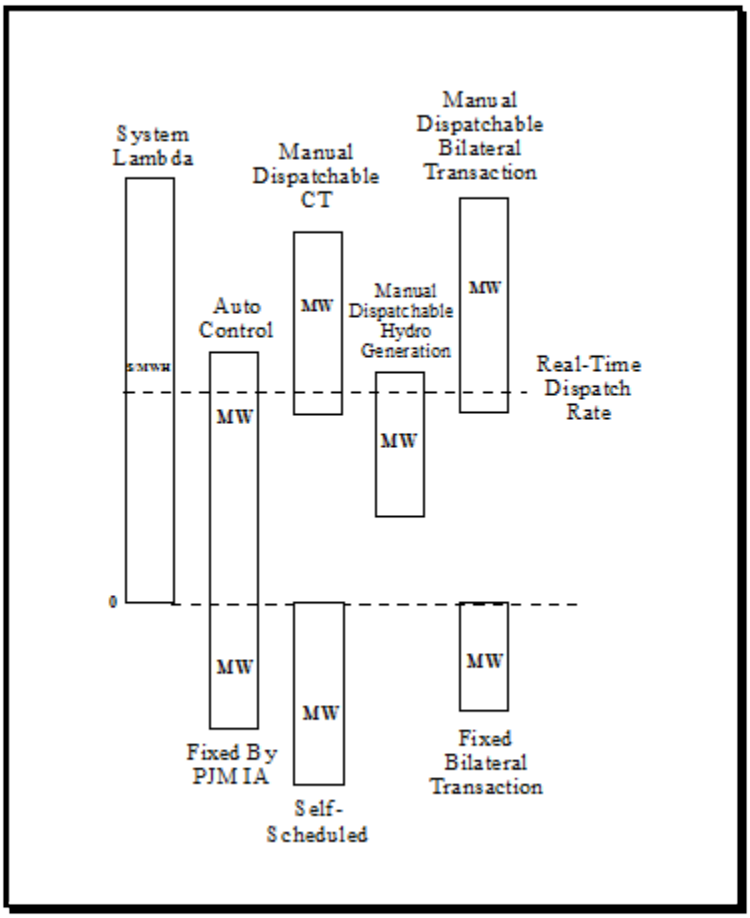

Exhibit 3: ~~Resource Dispatching~~

Real-Time Market Applications

To conduct the Real-time Markets, a multi-module software platform is used by PJM to dispatch energy, ensure adequate reserves in real-time and regulation in near time (see the image below). The Real-~~-~~time market c~~C~~learing e~~E~~ngines and various other applications communicate jointly and the most recent information from each application is stored and upon request provides the relevant data to each application. To run the Real-time Markets, data is processed from the markets database and other PJM systems.

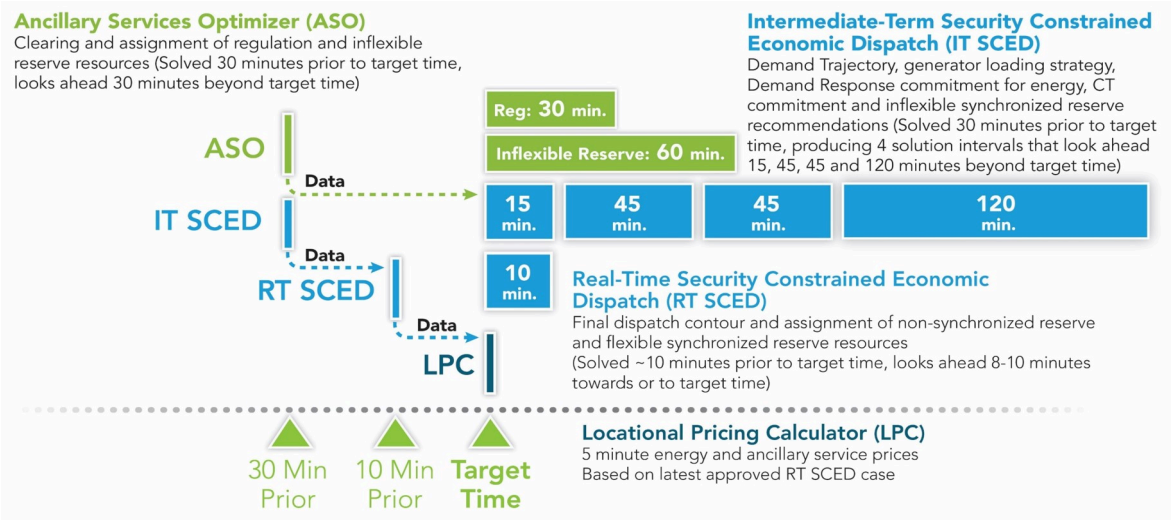

Exhibit 4: Real Time Market Application Process Flow

The applications jointly optimize the products on a 5-minute basis to ensure that all system requirements are met using the least cost resource set.

The real-time market applications consist of the following:

- **Ancillary Service Optimizer (ASO):** The Ancillary Services Optimizer (ASO) performs the joint optimization function of energy, reserves and regulation. The ASO creates an interval-based solution over a half-hour look-ahead period, and performs the regulation three pivotal supplier test. ASO does not calculate final market clearing prices. The main functions of ASO are the commitment of all regulation resources for the next half-hour interval and inflexible reserve resources for the next operating hour. More information about ASO can be found in Manual 11, Section 2.5.1.
- **Real-Time Security Constrained Economic Dispatch (RT SCED):** The Real-Time Security Constrained Economic Dispatch (RT SCED) application is responsible for dispatching resources to maintain the system balance of energy and reserves over a near-term look-ahead period. Historical and current system information is used to anticipate generator performance to various requests, and to provide accurate information regarding generator operating parameters under multiple scenarios. RT SCED will jointly optimize energy, online regulation and reserves with dispatchable resources to ensure system needs are maintained. The results from the RT SCED are energy basepoints and reserve commitments that are sent to resource owners in real-time. All quantities may change with each solution based on system economics and reserve needs. RT SCED determines reserves shortages.
- **Intermediate Term Security Constrained Economic Dispatch (IT SCED):** The Intermediate Term Security Constrained Economic Dispatch (IT SCED) application is used by PJM to perform various functions over a 1-2 hour look-ahead period. Historical and

current system information is used to anticipate generator performance to various requests, and to provide accurate information regarding generator operating parameters under multiple scenarios. The IT SCED solves a multi-interval, time-coupled solution to perform the following functions:

- Calculate energy dispatch trajectory for use in real-time dispatch
- Resource commitment recommendations for energy and reserves
- Resource commitment decisions for economic demand resources
- Execution of the Three Pivotal Supplier Test for energy
- Coordinated Transaction Scheduling

An RT SCED case is executed automatically every five minutes or when executed by the operator. To calculate the solution in each case, data from multiple sources is used, including but not limited to, data regarding online and available resources, resource offers, forecasted load, scheduled and current interchange, as well as various other input parameters. The RT SCED cases use the load forecast and other relevant system information for the look-ahead interval, rather than the time at which the case is executing, to achieve a dispatch solution that will adequately control for those forecasted conditions.

Real-time data sources include:

- Load forecast data from EMS
- Constraint data - including resource sensitivities from EMS
- State Estimator output from EMS
- Transaction data from ExSchedule
- Generator operating parameters, availability, and offer data from Markets Gateway

Multiple RT SCED cases are then produced, with each solution solving the security constrained economic dispatch problem. Each of these solution cases contains:

- A recommended set of zonal dispatch rates
- A list of exceptions to the dispatch rates for constraint control
- Individual resource dispatch rates
- Individual Resource Desired MW level
- Individual Resource Reserve Commitments

The operator may have to adjust Real Time SCED cases to produce an output to control the system reliably by adjusting the load bias. Biasing is used to compensate for any deviations in load forecast, wind and solar forecast, interchange forecast and generator operating parameters. The bias is entered as a MW value and is distributed across the entire RTO. Biasing is used to account for various variances between the demand and generation and helps to compensate for the deviations. Biasing can also be used to compensate for any loss of data inputs and system emergencies.

3.1.3 PJM Member Control Implementation

PJM assigns desired control actions to the internal PJM Members. PJM Members are responsible for the actual physical control of generating resources. This is generally accomplished through Generation Owners. The PJM Member Interface Exhibit shows the information that is exchanged between PJM and the Generation Owners.

Specific requirements regarding telemetered data and controls as required by NERC Standard BAL-005-1, Balancing Authority Control, are described in PJM Manual 01, Control Center and Data Exchange Requirements, Control Center Requirements, section 5, Metering System Requirements.

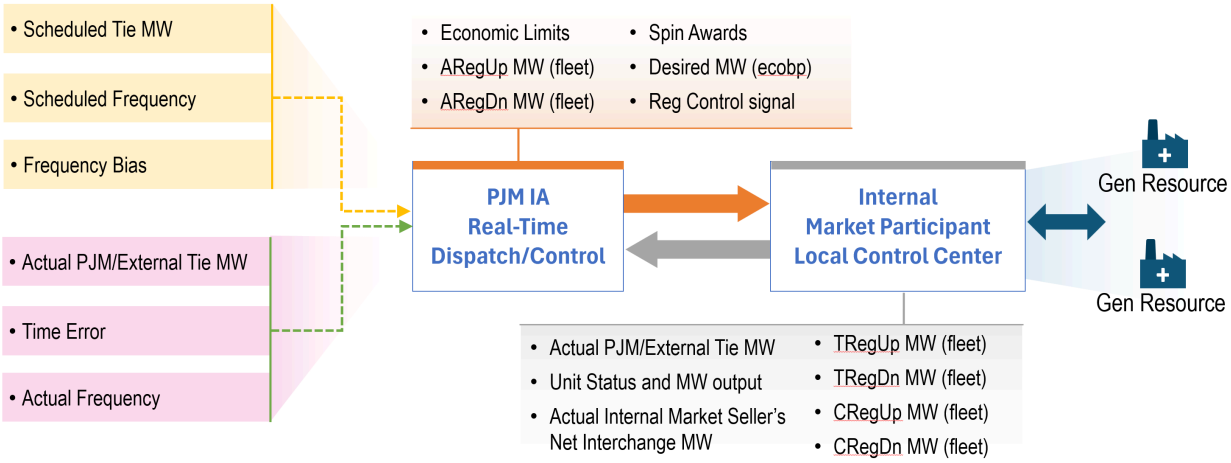

Exhibit 5: PJM Member Interface

The following information is sent by PJM to the Generation Owners:

- Economic Limits
- Assigned Regulation megawatt (ARegUp and/or ARegDn)
- Spin awards
- Desired megawatt (economic basepoint)
- Regulation control signal

The following information is sent by the PJM Members to PJM:

- Actual PJM/external tie line megawatt
- Unit status and MW output
- Total assigned Regulation megawatt that is fleet based (TRegUp and/or TRegDn) ~~(fleet)~~
- Total current Regulation megawatt that is fleet based (CRegUp and/or CRegDn) ~~(fleet)~~
- Actual net interchange megawatt

The PJM Member's Generation Owner converts the total dispatch signal and the Regulation signal to individual unit control signals. PJM Member resources that are dispatchable are expected to respond to the dispatch and regulation signals received from PJM. PJM Members are expected to operate their generating resources as close to desired output levels, as practical, consistent with Good Utility Practice.

3.2 Time Error

The system-wide mismatch between load and generation results in frequency deviations from scheduled frequency. The integrated deviation appears as a departure from correct time, i.e., a time error. Therefore, time error is the accumulation of frequency deviation over a defined period of time.

In accordance with NERC BAL Standards, each interconnection designates an Interconnection Time Monitor to monitor time error and to initiate or terminate corrective action when time error reaches predetermined limits. The PJM RTO is a part of the Eastern Interconnection. The Interconnection Time Monitor monitors the electric system time against true time, as measured by the National Institute of Standards and Technology (NIST) in Boulder, Colorado. When time error reaches ±10 seconds, the Interconnection Time Monitor initiates a time correction. No time error corrections for fast time will be initiated between 0400 and 1100 CST. In response to the Interconnection Time Monitor, PJM implements the requested frequency schedule offset.

A time correction may be halted, terminated or extended if the designated Interconnection Time Monitor or PJM determines system reliability conditions warrant such action.

After the premature termination of a manual time correction, a slow clock time correction can be reinstated after the frequency has returned to 60 Hz or above for a period of 10 minutes. A fast clock time correction can be reinitiated after the frequency has returned to 60 Hz or lower for a period of ten minutes. At least one hour shall elapse, however, between the termination and re-initiation notices.

3.2.1 Time Error Correction Notification

The Interconnection Time Monitor issues the time correction information via a NERC hotline conference call, and a message is posted on the RCIS. A frequency offset of ±0.02 Hz starts and terminates on the hour or half-hour.

PJM Actions

- Step One – PJM dispatcher notifies the Transmission Owners/Generation Owners, via the PJM ALL-CALL, that a time error correction is scheduled to go into effect. To correct for a slow or fast clock, system frequency schedules are offset by ±0.02 Hz and are assigned a letter designator.

- Step Two – At the assigned time, PJM dispatcher inputs frequency schedule into the PJM EMS System using to 59.98 Hz to correct for fast-time error or 60.02 Hz to correct for slow-time error as directed by the Interconnection Time Monitor.
- Step Three – When the time error is reduced to specified levels, or if the time error is not corrected in a reasonable period, the Interconnection Time Monitor issues the order to return frequency schedule setters to 60.00 Hz. The Interconnection Time Monitor initiates a NERC hotline conference call and posts a message on the RCIS. At this time, PJM dispatcher resets the PJM EMS frequency schedule to 60.00 Hz at the assigned time.
- Step Four – PJM dispatcher notifies the Transmission Owners/Generation Owners via the PJM ALL-CALL of the cancellation of the time correction, and the time the scheduled system frequency will return to 60.00 Hz.
- Step Five – If reliability concerns develop during the execution of the time error correction, the PJM dispatcher notifies the Interconnection Time Monitor and requests that the time error correction be immediately terminated. Similarly, if reliability concerns are anticipated with a scheduled time error correction, the PJM dispatcher notifies the Interconnection Time Monitor to cancel the scheduled time error correction.

3.3 External Transactions Scheduling - Deleted (Section 2.1 of the Regional Transmission and Energy Scheduling Practices document is the official source of this information)

3.4 External Transaction Scheduling Business Rules – Deleted (Section 2.2 of the Regional Transmission and Energy Scheduling Practices document is the official source of this information)

3.5 Inadvertent Interchange

Hourly Inadvertent Interchange is defined as the difference between hourly net actual interchange and hourly net scheduled interchange of a Balancing Authority. Attachment E provides additional detail regarding BAL standard reporting requirements. It is caused by any of the following factors:

- Bias response to frequency deviations occurring on the interconnected system
- Metering errors (methods of correction details are discussed in the PJM Manual 28, Operating Agreement Accounting, section 12, Metering Reconciliation Accounting
- Inability of system generation to exactly match load and/or net interchange schedule changes

Hourly Inadvertent Interchange may accumulate in a Balancing Authority Area as a megawatt hour credit or debit. It is accounted for each month. PJM maintains a record of the PJM RTO's

accumulated Inadvertent Interchange for both on- and off-peak periods as required by the applicable NERC and NAESB standards.

Over time, PJM attempts to minimize the amount of accumulated Inadvertent Interchange. This is accomplished by continually monitoring and correcting for Inadvertent Interchange. The portion of Inadvertent Interchange caused by frequency bias is self-compensating if no additional action is taken by a PJM dispatcher. This is because, on the average, frequency deviations are low as often as they are high. In order for time error to average zero, the Inadvertent Interchange that flows as the result of frequency bias contribution is balanced automatically by the tie line bias control.

3.5.1 Correcting for Accumulation of Inadvertent Interchange

It is the responsibility of PJM dispatcher to correct for the accumulation of Inadvertent Interchange.

PJM Actions

The reduction of an accumulation (on an on-peak period or off-peak period basis as defined above) of Inadvertent Interchange is accomplished by one of the following two methods:

- Unilateral Payback – Inadvertent Interchange accumulations may be paid back unilaterally by controlling to a target of non-zero ACE. Controlling to a non-zero ACE ensures that the unilateral payback is accounted for in the CPS calculations. The unilateral payback control offset is limited to PJM's L10 limit and shall not burden the interconnection.
- Bilateral Payback – Bilateral Payback is scheduled with another Balancing Authority and is accomplished as follows:
    - Inadvertent Interchange accumulation may be reduced by scheduling a correction with any adjacent Balancing Authority, provided they have an accumulation in the opposite direction. The amount of schedule established by a PJM dispatcher is determined by the following factors:
        - Amount of accumulated Inadvertent Interchange
        - Current net interchange schedule in effect
        - Current state of the PJM Balancing Authority Area with respect to load and transmission facilities
- If a schedule cannot be established with the adjacent Balancing Authority, correction of Inadvertent Interchange accumulations may be scheduled with a remote Balancing Authority, provided that the intervening Balancing Authority dispatchers are advised of such schedules and are agreeable.
- There may be times when the adjacent Balancing Authority desires to establish a schedule to reduce Inadvertent Interchange accumulations with Balancing Authorities other than the PJM RTO.

3.5.2 Measurements and Compliance

In accordance with NERC INT Standards, PJM will coordinate interchange transactions per the respective established Operating Agreements.

PJM Members' Actions

None.

3.6 Primary Frequency Response

Primary Frequency Response is the first stage of frequency control and is the response of generator governors and loads to arrest locally detected changes in frequency.

Primary Frequency Response is automatic, is not driven by any centralized system, and begins within seconds after the frequency changes.

Primary Frequency Response is essential for reliability of the interconnection and is:

- The first line of defense
- Critical for system restoration
- Needed for accurate modeling and event analysis
- Necessary for compliance with NERC Standard BAL-003-2, Frequency Response and Frequency Bias Setting

3.6.1 Generator Primary Frequency Response Evaluation

Generating resources' expected performance will be calculated using the primary frequency control calculation, taking into account the droop, deadband, and operating requirements in PJM Manual 14D, Generator Operational Requirements, section 7.1, Dispatching of Generation. Verification of droop and deadband settings should be performed by the resource owner.

- Frequency below governor deadband:

$$MW_{PrimaryControl} = \left[\frac{(HZ_{actual} - 60 + DB)}{(60 * Droop - DB)}\right] * (FrequencyResponsiveCapacity) * (-1)$$

- Frequency above governor deadband:

$$MW_{PrimaryControl} = \left[\frac{(HZ_{actual} - 60 - DB)}{(60 * Droop - DB)}\right] * (FrequencyResponsiveCapacity) * (-1)$$

Where Frequency Responsive Capacity represents the available operating capacity of the generating resource at the time of the event.

When resources are ramping prior to an event, response will be offset by that ramp rate. The ramp rate will be calculated for a resource 10-minutes prior to the event start, and the expected response will be adjusted for this ramp as below:

Actual Response = ($AvgMW_{20\text{-}52sec}$ – $AvgMW_{\text{-}16\text{-}0sec}$) – Ramped MW during event

Exclusions to the frequency response performance evaluation will include:

- Nuclear generation
- Units offline during the event
- Units that have no available headroom/footroom
- Units that are assigned regulation
- Units that have an active eDART ticket for governor outage

If PJM determines that a unit is not providing Primary Frequency Response based on the performance evaluation, PJM will work with the Generation Owner and review additional variables to support performance improvements, including, but not limited to, telemetry, operating scenarios, generator hold points and non-functioning governor equipment.

3.6.2 Event Selection

PJM will evaluate generators during periods of large system frequency deviations. PJM targets two to three frequency events per month for evaluation, but no set number of events will be defined since events are based on system conditions. Selected events and event selection criteria will be reviewed quarterly with the Operating Committee for continued performance and applicability. The criteria required for event selection:

- Frequency goes outside +/- 40mHz deadband
- Frequency stays outside +/-40mHz deadband for 60 continuous seconds
- Minimum/maximum frequency reaches +/- 53mHz

A quarterly review will look at an average performance over a 12-month window. PJM will require a minimum of three applicable events for a resource to perform the performance review (event selection will go back further than 12 months if needed in this case). Each event will be evaluated separately, and the performance will be averaged for responsive/non-responsive determination. A 50 percent or greater average performance will be considered frequency responsive.

Section 4: Providing Ancillary Services

Welcome to the *Providing Ancillary Services* section of the ***PJM Manual for Balancing Operations.*** In this section you will find the following information:

- How PJM monitors and restores reserves (see “Reserves”).
- How PJM determines and assigns Regulation (see “Regulation”).
- How a generating resource is tested and qualified for Regulation service (see “Qualifying Regulating Resources”).
- How PJM ensures and monitors Black Start Service (see “Black Start Service”).

4.1 Reserves

Reserves are additional capacity above the expected load. Scheduling excess capacity protects the power system against the uncertain occurrence of future operating events, including the loss of capacity or load forecasting errors.

4.1.1 Monitoring Reserves

PJM is responsible for monitoring and adjusting the reserves to ensure compliance with NERC Resource and Demand Balancing (BAL) Standards , for the PJM Balancing Authority, within the Reliability First Corporation (RFC) and Southern Electric Reliability Council (SERC) Regional Entity Footprint. On a daily basis, the PJM dispatcher performs an Instantaneous Reserve Check (IRC) prior to each peak, or more often as system conditions require, to determine if adequate reserves exist to meet the PJM reserve requirements. An IRC may be taken more frequently if system conditions dictate. When the PJM generation dispatcher requests an IRC, member dispatchers report the information via eDART. If eDART is unavailable, member dispatchers report the information directly to the PJM generation dispatcher. Attachment A presents and describes the PJM IRC report.

An IRC provides the PJM dispatcher with an indication of the actual reserves that are available at that point in time. By conducting an IRC at strategic points during the day, the PJM dispatcher establishes benchmarks between which the actual reserve can be estimated. Since system conditions can change very rapidly, the IRC is only an indication of the actual reported reserves at that point in time. The PJM dispatcher uses the results of the IRC to determine if reserve shortages exist and what, if any, Emergency Procedures should be declared to supplement the electronic reporting of reserves through the EMS systems.

When the PJM Net Tie Deviation indicates under-generation, the Synchronized Reserve total is adjusted downward by the amount of the Net Tie Deviation to reflect the PJM Balancing Authority Area’s generation deficiency. Conversely, when the PJM Net Tie Deviation indicates over-generation, the Synchronized Reserve total is adjusted upward by the amount of the Net Tie Deviation to reflect the PJM Balancing Authority Area’s generation excess. Therefore, when

possible, the PJM dispatcher requests an IRC when the ACE and Net Tie Deviation is close to 0 MW.

PJM Actions

- **Step One** – Using the PJM ALL-CALL, PJM dispatcher requests an IRC.
- **Step Two** – Upon receipt of all Generation Owner reports, PJM dispatcher determines the following values:
  - PJM Operating Reserve
  - Adjusted Primary Reserve versus Primary Reserve Requirement
  - Adjusted Synchronized Reserve versus Synchronized Reserve Requirement
  - Area Synchronized Reserve levels
- **Step Three** – PJM dispatcher compares the values calculated in Step Two to the corresponding objectives, and then determines whether reserve deficiencies exist.
- **Step Four** – Using PJM eDART, the PJM dispatcher reports the results of the IRC to the Generation Owners/Transmission Owners.
- **Step Five** – Where applicable, the PJM dispatcher follows up with the Generation Owner or PJM support personnel around any adjusted values that stem from invalid market data.

PJM Member Actions

- **Step One –** The Generation Owner responds to an IRC request as requested by PJM.
- **Step Two –** The Generation Owner promptly reports the following values on a discrete unit-by-unit level to PJM via the eDART IRC application. If eDART is unavailable, the values are reported directly to a PJM dispatcher via telephone.
  - **Synchronized** Reserve (Regulating)
  - **Synchronized** Reserve (Non-Regulating)
  - Non-Synchronized (Quick-Start) Reserves
  - Secondary reserve
  - Beyond secondary reserve
- **Step Three** – Where applicable, the Generation Owner adjusts any individual generation values (such as EcoMax, ramp rate, availability) that are causing a mismatch between PJM and Generation Owner calculations.

See Attachment A for reserve calculations and IRC reporting requirements.

4.1.2 Loading Reserves

During disturbance conditions (e.g., loss of generation and/or transmission resources), Synchronized Reserve and, to the extent necessary, Non-Synchronized Reserves are used to recover the ACE so that tie line schedules are maintained. Depending on system conditions, manual methods may be used to accomplish this recovery. Based on system conditions and the

ability of regulation to recover, PJM operators will evaluate the need to implement its Contingency Reserve upon the contingent loss of generation.

PJM Actions

- PJM dispatcher determines the approximate amount and location of lost generation, and the amount of Synchronized Reserve that must be loaded to:
  - Correct for the sudden loss of generation located within the PJM Balancing Authority Area (as indicated by the PJM Balancing Authority's ACE and system frequency deviations)
  - Return interchange transfers or other thermal or reactive limitations to within the appropriate limits
- Implement 100 percent Synchronized Reserve and/or Quick Start Reserves if there is insufficient regulation and economic generation to recover the ACE within DCS (BAL standards). A Reportable Balancing Contingency Event is the initial sudden decline in the responsible entity's Reporting ACE that results in a loss of MW output less than or equal to its Most Severe Single Contingency (MSSC), and greater than or equal to the lesser amount of 80% of its MSSC or 900 MWs.
- PJM dispatcher will initiate the event by selecting the appropriate Synchronized Reserve Zone in the PJM EMS. This action will send an initiating signal to resource owners capable of receiving the signal via any existing EMS datalinks established between PJM and the resource owners using ICCP or DNP3 protocols.
- PJM dispatcher will follow up with a PJM ALL-CALL Message requesting resource owners with a Synchronized Reserve Commitment to load a percentage (25, 50, 75, or 100 percent) of the Synchronized Reserve (typically 100 percent) in the appropriate control zone(s). PJM has several Synchronized Reserve market areas. The dispatchers will select the most effective response respecting the requirements of the regional reserve sharing programs in which PJM is a participant.
- If specific equipment is excluded from the request, the PJM dispatcher calls the appropriate resource owner immediately following the PJM ALL-CALL message.
- If transmission limits exist, or may be caused by loading Synchronized Reserve and Non-Synchronized Reserve in certain geographic areas or control zones, the PJM dispatcher specifies the areas or control zones that are to be included in the request for Synchronized Reserve.
- The PJM dispatcher contacts external systems to implement shared reserves (as required).
- PJM dispatcher also requests the loading of an appropriate amount of Non-Synchronized Reserve (as required).
- If the PJM dispatcher determines that the Synchronized Reserve that is being loaded is not sufficient to recover the system from a facility malfunction or failure, the PJM dispatcher requests Synchronized Supplemental Reserve to be loaded (as required).

- As the resource owner dispatchers load the reserves, the PJM dispatcher evaluates the effect. The PJM dispatcher surveys the resources loaded and determines generation that is needed to remain loaded and the replacement resources that can be returned to normal status so that the PJM Balancing Authority load can be economically carried at a new price level.
- The PJM dispatcher cancels the requests, as appropriate.

PJM Members Actions

- Resource owners that elect to use their assets to respond to an event shall, without regard to price and as quickly as possible, load the requested percentage of Synchronized Reserve and Non-Synchronized Reserve immediately after receiving either the PJM ICCP signal, DNP3 signal, or PJM All-Call Message. PJM Members responding to the event will continue to load resources until directed by the PJM dispatcher to discontinue. Resources currently providing Regulation service should remain on Regulation during Synchronized Reserves event. All other resources with no real-time Synchronized Reserve effective assignment should follow their dispatch/schedule or SCED basepoint. ~~Resources providing Regulation service should only provide Synchronized Reserves to the extent that they can quickly resume accurate Regulation control following the event.~~
- Upon cancellation, the Generation Owner dispatchers unload the Synchronized and Non-Synchronized Reserve, as directed by the PJM dispatcher.

4.2 Simultaneous Activation of Reserves (NPCC)

Simultaneous Activation of Reserves is a procedure between the Northeast Power Coordinating Council (NPCC) and PJM to jointly activate a portion of their 10-minute reserve following any of the following situations:

- Generation or energy purchase contingencies equal to or greater than 500 MW (300 MW for Maritimes) occur under conditions where activation assists in reducing a sustained load/generation mismatch
- Two or more resource losses below 500 MW (300 MW for Maritimes) within one hour of each other
- Periods of significant mismatch of load and generation

The participating systems in NPCC Simultaneous Activation of Reserves are the ISO New England (ISO NE), the New York Independent System Operator (NYISO), PJM, Maritimes, New Brunswick and Independent Electricity Market Operator (IESO formerly IMO of Ontario). The objective is to provide faster relief of the initial stress on the interconnected transmission system. The NPCC Operating Reserve Policy and the Operating Reserve Policies of all NPCC areas and of PJM are not changed by any of the provisions of this plan.

The NYISO acts as the plan coordinator.

PJM Actions

If the loss of generation/purchase is located in the NPCC:

- The NYISO supervising dispatcher assigns PJM a share of reserve pick-up. NYISO indicates the amount of participation.
- PJM dispatcher manually adjusts regulation, loads generation or Synchronized Reserve in selected areas or across the entirety of PJM based on transfer limitations. This assistance is implemented at a zero-time ramp rate immediately following allocation notification. Response by assisting balancing areas shall respond as quickly as possible, assuming the same obligation as if the contingency occurred within the balancing area. This should be implemented via manually adjusting regulation if possible.
- PJM dispatcher notifies the NYISO supervising dispatcher that PJM's reserve pick-up is completed.
- When the contingent system satisfies its ACE requirements, they notify the NYISO supervising dispatcher, who requests all participants to cancel their activated reserve allocations (normally 10 minutes, but no longer than 30 minutes) when the generator loss is replaced. The assistance provided by PJM is ramped out at a 10-minute ramp rate.
- When PJM completes its reserve pick-up, the PJM dispatcher notifies the Local Control Centers to cancel Synchronized Reserve loading.

If the loss of generation/purchase is located in PJM:

- PJM dispatcher activates 100 percent Synchronized Reserves and notifies the NYISO supervising dispatcher of generation loss, and includes any special requests. For example, for the loss of a large eastern unit, PJM dispatcher may request IMO not to participate.
- The NYISO supervising dispatcher activates reserves and notifies PJM dispatcher, via conference call, of the 10-minute reserve amount that NPCC members contribute.
- PJM dispatcher terminates activated reserves (normally 10 minutes, but no longer than 30 minutes) when the generation loss is replaced.

4.2.1 Payback

Currently, payback MWh are not required for NPCC Simultaneous Activation of Reserves Events.

PJM Member Actions

None

4.2.2 Restoring Reserves

By continuously monitoring reserves, the PJM dispatcher ensures that reserve levels are maintained in accordance with NERC BAL Standards. During normal operation, the PJM dispatcher loads the system based on economics while monitoring the available reserves. If,

however, based on the best judgment of the PJM dispatcher after evaluating the results of the IRC, reserve deficiencies exist on the system, the following actions are taken, dependent on the deficiency:

- Synchronized Reserve Deficiency — Normally, restoration of Synchronized Reserve is accomplished by condensing CTs, notifying interruptible load resources, or loading Non-Synchronized Reserve or Supplemental Reserve to a minimum level to provide sufficient Synchronized Reserve or to the economic energy level to allow equipment (i.e., steam units) to back down to provide sufficient Synchronized Reserve.
- Primary Reserve Deficiency — When the PJM dispatcher is assured that the Synchronized Reserve objective is covered, the PJM dispatcher attempts to eliminate any Primary Reserve deficiency. Restoration is accomplished by any combination of the following actions:
    - Loading Supplemental Reserve to Primary Reserve status or providing additional Primary Reserve on other equipment.
    - Bringing additional equipment which is available but not scheduled to operate into the Primary Reserve status.

That portion of the Primary Reserve deficiency that is due to an adjustment to the internal PJM Primary Reserve as a result of a net non-capacity interchange scheduled into PJM can be tolerated provided system reliability is not degraded. On these occasions, the PJM dispatcher ensures that sufficient shutdown CT and/or hydro capability are readily available to cover the amount of the deficiency.

- Operating Reserve Deficiency — When the PJM dispatcher is assured that both the Synchronized and Primary Reserve objectives are covered, the PJM dispatcher attempts to eliminate any deficiency in Operating Reserve. Sufficient reserve is maintained for coverage of load-forecast uncertainty and probable additional failure or malfunction of generating equipment. The decision of whether to replenish Operating Reserve is based on the PJM dispatcher's best judgment. The PJM dispatcher may choose to replenish all, some, or none of the Operating Reserve during the operating day.

4.3 Regulation

The PJM RTO is a single Balancing Authority Area consisting of multiple Control Zones. Resource owners providing Regulation are required to comply with standards and requirements of Regulation capability and dispatch, as described in this section.

PJM requires that all regulating generation resources be equipped with an Automatic Generator Control (AGC) scheme to receive, process and respond to a Regulation control signal that bifurcates into two market products, Regulation Up (RegUp) and Regulation Down (RegDn). Demand response resources providing Regulation must have a similar control system to accommodate RegUp and RegDn.

4.3.1 PJM RTO Regulation Market Obligations

The Regulation Requirement for the PJM RTO can be found in this manual in Section 4.3.3, Determining Regulation Assignment. The resources assigned to meet this requirement must be capable of responding to the Regulation control signal immediately for RegUp and/or RegDn~~,~~ and achieve their bid capability within five minutes ~~and must increase or decrease their outputs at the ramping rates that are specified in the data that is submitted to PJM~~.

The PJM RTO requires that the Regulation range of a resource is at least ~~twice~~ the amount of Regulation assigned for RegUp and/or RegDn, ~~and that the resource can symmetrically provide the total amount of Regulation assigned (a full raise and lower of assigned regulation from set-point)~~ as illustrated in the Assigned Regulation and Regulation r~~R~~ange r~~R~~equirements Exhibit below.

Demand Response resources providing Regulation for RegUp and/or RegDn are required to fulfill the Regulation range r~~R~~equirements without injecting energy into the Bulk Electric System (BES).

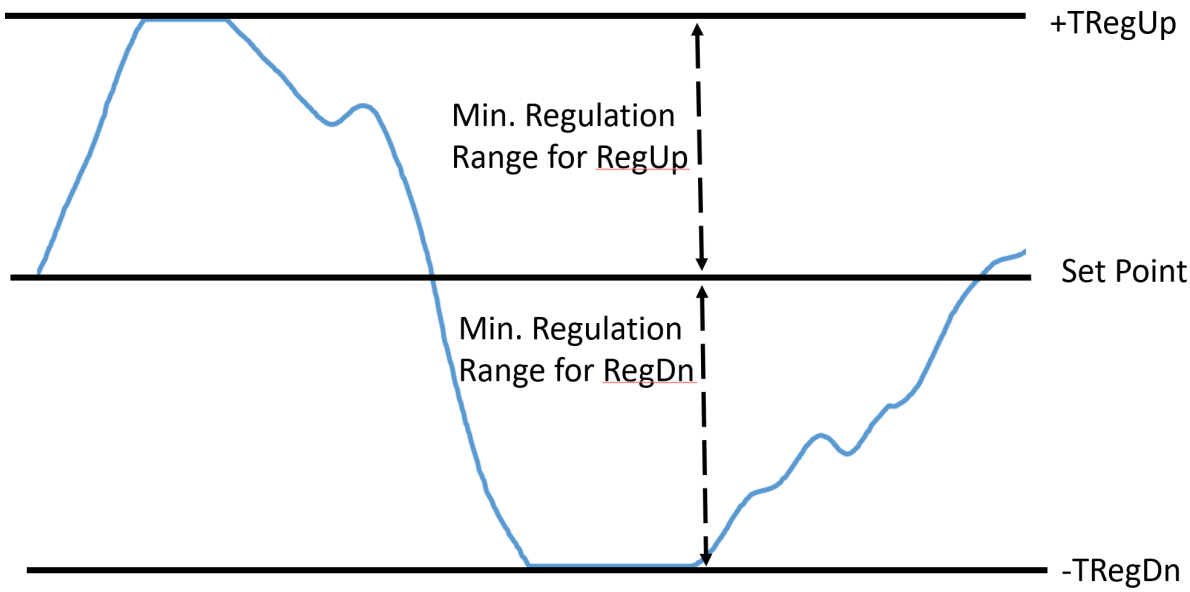

Exhibit 6: Assigned Regulation and Regulation Range Requirements

~~A resource capable of automatic energy dispatch that is also providing Regulation reduces its energy dispatch range by the Regulation assigned to the resource. This redefines the energy dispatch range of that resource. (The resource's assigned Regulation subtracted from its Regulation maximum forms the upper limit of the new dispatch range, while the resource's Regulation minimum plus its assigned Regulation forms the lower limit of the new dispatch range.) The Limit Relationship for Regulation Exhibit illustrates the limit relationship.~~

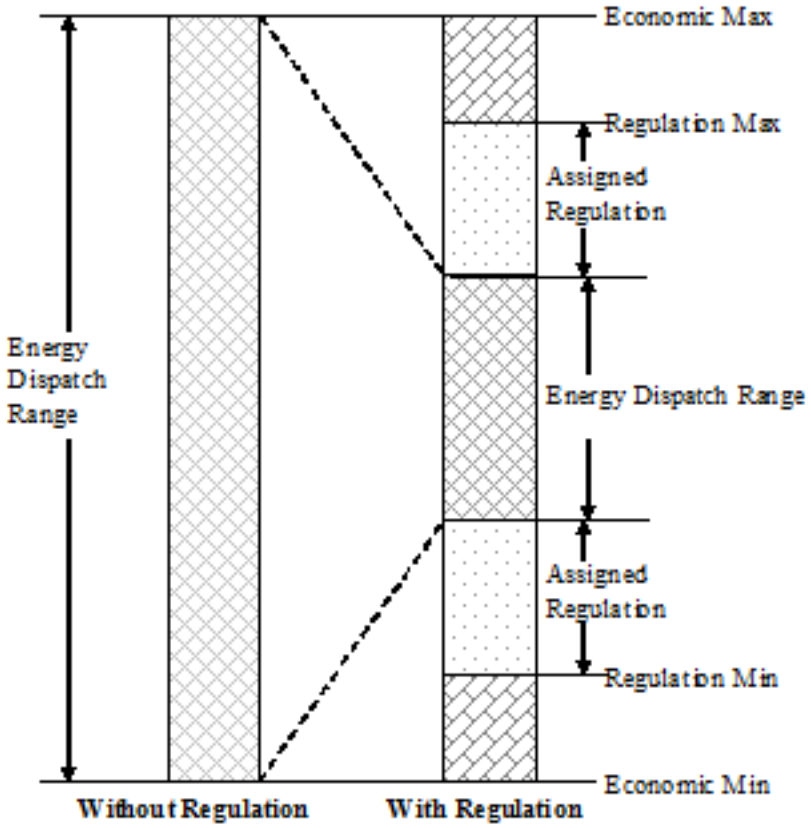

Exhibit 7: Limit Relationship for Regulation

The Regulation set point for RegDn ranges: [RegLo + RegDn to RegHi];

The Regulation set point for RegUp ranges: [RegLo to RegHi - RegUp];

The Regulation set point for RegUp plus RegDn ranges: [RegLo + RegDn to RegHi + RegUp];

where: RegLo = higher of [Regulation Minimum or Economic Minimum]

where: RegHi = lower of [Regulation Maximum or Economic Maximum]

The Limit Relationship for Regulation Exhibit illustrates the limit relationship with Regulation and without Regulation.

Resource owners wishing to provide Regulation in the PJM Balancing Authority Area are required to submit offer data as further detailed in Section 3.2.4 of Manual 11: Energy & Ancillary Services Market Operations.

4.3.2 Regulation Signal

Resource owners will receive from PJM:

- Assigned Regulation (AReg Up and/or ARegDn) – This is the assigned interval Regulation quantity (MW) that is cleared from the Regulation market system. It is assigned for each individual resource that is qualified to regulate in the PJM market. This value, although typically static for the interval, will be sent on a 10-second scan rate.
- Regulation Control Signal (RegA) – Real-time instantaneous resource owner fleet Regulation signal (+/- MW). This signal is used to move regulating resources in the owner's fleet within the fleet capability (+/- TReg Up and/or TRegDn). This value will be sent on a two-second scan rate.

Resource owners will send to PJM:

- Total Regulation (TReg Up and/or TRegDn) – This is the real-time fleet regulation capability (MW) that represents the active resource owner's ability to regulate. Ideally the value of this quantity should be the sum of the resource owner's non-zero assigned Regulation quantities for the majority of the interval, but must reflect any reductions in regulating capability as they occur (resource's AGC limit restrictions, resource "off control" conditions, etc.). This value shall be calculated every two seconds and sent on a two-second scan rate.
- Current Regulation (CReg Up and/or CRegDn) – This is the real-time fleet regulation feedback (+/- MW) that represents the active position of the fleet with respect to the +/- TReg Up and/or TRegDn capability. Ideally, the value of this quantity will track the Regulation control signal if the regulating fleet is responding as prescribed. This value shall be calculated every two seconds and sent on a two-second scan rate.
- For hydro resources that have no economic offer, these resources must submit the resource(s) midpoint.
- Regulation Only Resources~~Demand Response resources~~ are expected to provide PJM with a MW-value basepoint (LOADBP) in which the resource is regulating around.
- LOADBP can be updated at most once every 5 minutes.

Resource owners may send the following to PJM if the resource owner will be using a performance group as described in Section 4.4.6, Use of Performance Groups in the Performance Score, of this manual for evaluation:

- Resource Allocation – Individual unit allocation may be sent to evaluate resource response. Allocation should be sent as percent allocation for each individual regulating resource of the resource assigned Regulation. When the resource is not assigned it will send a 0 percent. Resources without an associated allocation signal will be scored on a proportional basis.
- Operational Midpoint – the point around which the regulating resource (unit, plant or registration) operates.

If the above signals are not sent, then PJM will use proportional allocation and economic setpoint.

4.3.3 Determining Regulation Assignment

The Regulation Requirement megawatt table and methodology for RegUp and RegDn posted on pjm.com at:

http://www.pjm.com/markets-and-operations/ancillary-services.aspx

PJM dispatch may increase or decrease the Regulation Requirements as needed to accommodate system conditions. Each Load Serving Entity (LSE) is required to provide a share of the PJM Regulation Requirement. A LSE's actual hourly Regulation obligation is determined for the hour, after-the-fact, based on the LSE's total load in the PJM RTO, as follows:

LSEs Regulation Obligation = $(LSEs\ Load\ Allocation\ \% \times PJM\ Assigned\ Regulation)$

A LSE may satisfy its Regulation obligation by any of the following methods:

- Self-Scheduled Resources — A LSE can satisfy its Regulation obligation by self-scheduling Regulation.
- Bilateral Transaction — A LSE can make contractual arrangements with other PJM Members that are able to provide Regulation service.
- PJM Regulation Market Purchases — A LSE can purchase its Regulation obligation from the PJM Regulation market, i.e., from the excess Regulation capability provided to PJM by resource owners.

All Regulation offers reported to PJM must provide RegUp and/or RegDn~~Regulation~~ that has a quality standard of 75 percent or greater, as established by verification testing.

PJM Actions

- PJM will notify the Transmission Owners and Generation Owners via the PJM ALL-CALL of changes to the Regulation Requirement and the expected duration of such change.

PJM Members Actions

- Each LSE determines its estimated Regulation obligation for the operating day for both products based on its own forecast load and the information received via the PJM ALL-CALL.
- Resource owners view the half hour Regulation market results via Markets Gateway (available at least ten (10) minutes before the operating interval) as to those resources to which Regulation has been assigned RegUp and/or RegDn. Resource owners that have self-scheduled Regulation on any of their resources inform the PJM dispatcher when those resources are online and able to provide the self-scheduled Regulation, RegUp and/or RegDn.

- Once Regulation on a resource is self-scheduled by a resource owner, it is no longer eligible to participate as a pool-assigned regulating resource for the current operating day for RegUp and/or RegDn.
- One Market Participant may sell Regulation for RegUp and/or RegDn to another Market Participant. The two Market Participants in the Bilateral Transactions must operate in accordance with PJM Manual 11, Section 3.9.1, Regulation Bilateral Transactions.

4.3.4 Dispatching Regulation

PJM obtains the most cost efficient Regulation available, as needed, to meet the PJM RTO's Regulation Requirement for both products. PJM assigns Regulation in economic order based on the total cost of each available resource to provide Regulation for RegUp and/or RegDn, including real-time opportunity cost and the resource's Regulation offer price. The Regulation control signal for RegUp and/or RegDn is then automatically sent to the resource owners via AGC. Resource owners are responsible for maintaining unit regulating capability for RegUp and/or RegDn. ~~The Regulation Assignment Exhibit shows how the Regulation is assigned to the resources.~~

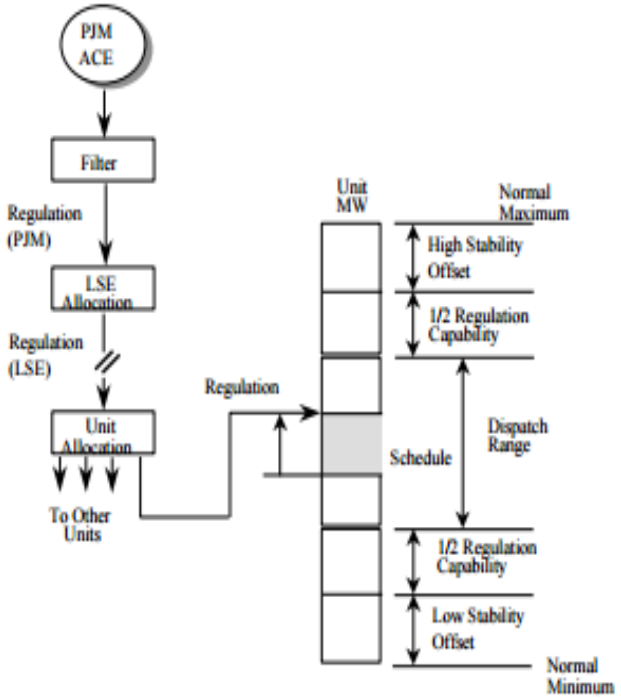

Exhibit 8: ~~Regulation Assignment~~

The PJM dispatcher re-assigns regulating capability as necessary to meet the PJM Balancing Authority's Regulation Requirement. Market Sellers must comply with Regulation control signal

for both products that is transmitted by PJM. Market Sellers must operate their regulating resources as close to desired output levels, as practical, consistent with Good Utility Practices.

Regulation Deficiency

After the initial Regulation assignments are made, and throughout the operating interval, PJM Members report changes to their resource's regulating capabilities either by a phone call to PJM or by virtue of the total Regulation signal~~(s)~~ each company sends to PJM. If a resource becomes unable to supply its assigned amount of Regulation, the PJM dispatcher must de-assign deficient resources and assign replacement Regulation to ensure that the total Regulation Requirement is met. Such assignments are made economically based on each available resource's total cost to provide Regulation, including real-time opportunity cost and the resource's Regulation offer price.

If, after assigning all available Regulation, the PJM Regulation Requirement is still not met, the PJM dispatcher operates the system without the required amount of Regulation, logging such events.

In the event there is a loss of EMS communication between PJM and a resource owner, current Regulation assignments must be reassigned to another resource owner until EMS communication is reestablished.

PJM Actions

- PJM dispatcher continuously monitors the Regulation deviation to assess resource owner fleet capability and reassigns Regulation as necessary.
- PJM settlement staff determines the billing for the regulating service, according to the procedures in Manual 28: Operating Agreement Accounting.

PJM Member Actions

- When initial assignments and reassignments are made, each affected resource owner dispatcher then updates the entity's regulating capability as defined by the resource owner total Regulation value.
- Participants report to the PJM dispatcher changes (of at least +/- 1 MW for duration greater than 15 minutes) to assigned Regulation capability.

Bilateral Transactions

One PJM Member may sell Regulation by product type to another PJM Member. The two members participating in the Bilateral Transactions must operate in accordance with PJM Manual 11, Section 3.9.1, Regulation Bilateral Transactions.

4.4 Qualifying Regulation Resources

In order to ensure the quality of Regulation supplied to control the PJM RTO, a quality standard is developed. A resource must meet the quality standard to be permitted to regulate.

In general, there are two phases to qualifying a regulating resource:

- Certifying the resource
- Verifying regulating capability

A Regulation test is used for both certifying and verifying regulating capability for a resource.

Note:
It must be emphasized that the Regulation test is not intended to test a resource's governor response to power system frequency changes.

PJM Actions

- PJM's Performance Compliance Department will evaluate test results against the PJM RTO Regulation Market Obligations as described in Section 4.3.1 and score the test using the performance score calculation as described in Section 4.4.5, Performance Score Calculation, of this manual within three business days of the test.
- PJM's Performance Compliance Department will send results of test to the resource owner within three business days.
- PJM maintains a historical database of individual resource Regulation test results and calculates all appropriate compliance information. Individual test results are provided via email to the participant within three business days to facilitate a review and validation of results at the participant level.
- PJM dispatcher determines if a self-administered test or PJM-administered test can be performed based on system conditions.

4.4.1 Regulation Qualification Test

The Regulation test is run during a continuous 40-minute period when, in the judgment of the PJM test administrator, economic or other conditions do not otherwise change the base loading of the resources that are being tested. All resources performing a Regulation test must set and hold for the test duration the MW-value base point that the resource is regulating around. Changes in base loading for a resource during the test period invalidate the test for that resource. The Regulation test follows a simulated Regulation signal and will last for 40 minutes.

Once a Regulation test is announced, a resource owner is not permitted to change any resource's Regulation assignment.

Following the testing period, an initial evaluation will be performed to ensure all underlying Regulation obligations and testing requirements have been met. This will include verifying the

resource (1) was providing Regulation for the duration (40 minutes) of the test; (2) can achieve its full Regulation testing range (+/- TregUp and/or TregDn~~REG~~); (3) has held its Regulation base loading for the full duration of the test; (4) that no other resources within the testing fleet were in the Regulation market during the testing period and (5) no more than one resource within the same Regulation fleet was testing within the same hour.

Scoring the Regulation test is based on compliance to the performance score calculation as described in Section 4.4.5, Performance Score Calculation, of this manual. The score is evaluated on the entire 40-minute test period.

Changes to the Signal Path Re-Test – New Resource Owner

For previously qualified resources that are either purchased by a new resource owner which would constitute a change in the Regulation signal path, resource owners must conduct a single, successful re-test to verify that each unit is able to respond to the Regulation signal under the new resource owner per product, RegUp or RegDn. This test will be PJM-administered and must meet the threshold for certification as described in Sections 4.4.1–4.4.3. During the transition, resources will not be qualified to offer Regulation. After the re-test, the resource performance score will be set to the re-test qualification score.

Changes to the Signal Path Re-Test – Existing Resource Owner

For previously qualified resources where an existing resource owner makes changes to the Energy Management System (EMS) or Generation Management System (GMS), or other changes which would constitute a change in the Regulation signal path, resource owners must conduct testing based on mutual agreement with PJM. This includes, but is not limited to, the EMS/GMS database, Inter-Control Center Communication Protocol (ICCP) servers and Communication Front End (CFE) replacements and/or upgrades. After system verification, the resource performance score will be set to the re-test qualification score per product, RegUp or RegDn. This test must be administered by PJM. If the changes to the signal path are initiated by PJM or impacts all or a large portion of the PJM Regulation fleet, then keeping historic performance scores will be implemented following test to prove signal path verification.

PJM Actions

- PJM's Performance Compliance Department will certify a resource after one~~two consecutive~~ successful test~~s~~ of 75 percent or better per product, RegUp or RegDn, after changes to the signal path re-test. After this requirement has been met, the change will be made to enable Regulation offers to reflect the new certification by the end of the next business day.

PJM Member Actions

- Contact PJM's Performance Compliance Department at least 24 hours prior to testing stating a regulation test will occur and include the following information: the resource name and identification number, what product, either RegUp or RegDn, the time of the test, the

amount of MW being tested, base point, and a reason why a regulation test is requested. Work with PJM Performance Compliance Department to ensure that the test can be scored by the Performance Score Calculation Engine (PSCE). A new resource of Regulation market must be added to PSCE before a regulation test occurs.

- Contact the PJM dispatcher at least 60 minutes in advance of a PJM-administered test for approval based on system's conditions.
- For a new resource owner, schedule a re-test by contacting RegulationTesting@pjm.com for each unit in a manner similar to the guidelines above when a new owner takes control of an already qualified regulation resource.
- For an existing resource owner, schedule system verification by contacting RegulationTesting@pjm.com based on mutual agreement with PJM staff when an existing resource owner changes the control signal path (e.g., EMS or GMS is changed or upgraded).

4.4.2 Certifying Regulating Resource

A resource may be certified only after it achieves two consecutive scores of 75 percent or above per product, RegUp or RegDn. Resources providing dispatchable energy and Regulation service needs to provide testing at the low economic and high economic Regulation limits.

A resource may choose one option that is more preferable for the resource:

1st Option: 1 self-administered test and 1 PJM-administered test

2nd Option: 2 PJM-administered tests

If a resource picks the first option, then a self-administered test has to be performed prior to the PJM-administered test.

The first of these tests may be performed internally by the Member, following the PJM Regulation Test Procedure. To perform a self-administered test, the Member must use the PJM test shape posted on the Markets and Operations > Ancillary Services > Market Based Regulation page, fed into the resource owner's EMS. Additionally, the Member must notify the PJM Performance Compliance Department at least 24 hours before the test. The resource owner should also notify PJM Dispatch, who will make a determination as to whether the test can be run. The resource should be set to unavailable in Regulation market during the self-administered test, all resources in the same Regulation fleet will be taken out of the Regulation market during the testing period. ~~though other units may continue to regulate.~~ Up to three self-administered tests may be performed on a resource each day.

The remaining test(s) should be administered by PJM Dispatch. The resource owner should contact PJM's Performance Compliance Department at least 24 hours before the test and PJM Dispatch at least 60 minutes prior to the testing. For a PJM-administered test, all resources in the same Regulation fleet will be taken out of the Regulation market during the testing period.

The PJM dispatcher makes the final determination about whether a PJM-administered test can be performed. Only one PJM-administered test may be performed on a resource each day.

PJM Actions

- PJM's Performance Compliance Department will certify a resource after two consecutive successful tests of 75 percent or better per product, RegUp or RegDn. After this requirement has been met, the change will be made to enable Regulation offers to reflect the new certification by the end of next business day.

PJM Member Actions

- Before both self-administered and PJM-administered tests, the resource owner notifies PJM's Performance Compliance Department 24 hours prior to testing and PJM dispatch at least 60 minutes prior to the testing.
- For any tests performed by the Members for the purpose of certification, the Member will supply the resource name and indentification number, what product, either RegUp or RegDn, the time of the test, the amount of MW being tested, the MW-value base point the unit will be regulating around, and a reason why a regulation test is requested to RegulationTesting@pjm.com.
- The resource owner will use the test shape posted on the Markets & Operations > Ancillary Services > Market Based Regulation page (http://www.pjm.com/markets-and-operations/ancillary-services.aspx) for a self-administered test.
- The resource owner will set the resources specific operation setpoints for each resource to test around.

(4.4.3) - Section Deleted

4.4.3 Increasing Regulation Capability on a Resource

One Regulation Certification Test is required for each market resource to increase the regulating capability on the resource per product, RegUp or RegDn. This test must be administered by PJM. Additionally, the member must notify the PJM Performance Compliance Department at least 24 hours before the test and PJM Dispatch at least 60 minutes before the test. All resources in the same Regulation fleet should be set to unavailable in Regulation market during the test.

PJM Actions

- PJM will update the Regulation bidding availability to reflect the new certification by the end of next business day after one successful test of 75 percent or better per product, RegUp or RegDn.

PJM Member Actions

- The resource owner notifies PJM's Performance Compliance Department 24 hours before the test and PJM Dispatch at least 60 minutes before a PJM-administered test.

- For any tests performed by the members for the purpose of increasing certification, the member will supply the resource name and indentification number, what product, either RegUp or RegDn, the time of the test, amount of MW being tested, the MW-value basepoint the unit will be regulating around, and a reason why a regulation test is requested to RegulationTesting@pjm.com.
- Resource owner will set the resources specific operation setpoints for each resource to test around.

4.4.4 Disqualification and Re-Qualification of a Regulation Resource

Regulating resources that have not met performance thresholds over a specified time period will be disqualified and must re-qualify to offer into the Regulation market per product, RegUp or RegDn. The disqualification threshold is based on the historic performance score. The historic performance score is a rolling average actual interval performance score for the last 200 intervals a resource has operated or a weighted average of the average of the two initial or requalification scores that are then averaged with available actual interval performance scores. The interval performance score calculation is described in Section 4.4.5, Performance Score Calculation, of this manual.

When the historical performance score falls below 40 percent per product, RegUp or RegDn, PJM will notify the resource owner and the resource will no longer be eligible to offer into the Regulation market for that product.

The resource owner may schedule a re-test as soon as practicable. One Regulation Certification Test is required for each resource to re-qualify for Regulation market per product, RegUp or RegDn. When a regulating resource re-tests, it will follow the testing procedure described in Sections 4.4.1–4.4.3 of this manual. Upon successful completion of requalification, the regulating resource performance score starts a new rolling average without any intervals from the previous period counting towards the current period's rolling average.

When a regulating resource has no historic performance available, either because it is a new resource or a resource that has re-qualified, the average of the qualification test scores will be used as proxy for the historical performance rolling average as follows:

$$Interval = \frac{X^{*}Qualification\ Performance\ Score + Y^{*}Actual\ Performance\ Score}{200}$$

Where 200 – X = Y and Y is the number of intervals after qualification. After 200 30 minute intervals of actual performance scores X → 0.

PJM Actions

- Tracks rolling average of a regulating resource's performance score
- Alerts the regulating resource's owner when performance falls below threshold of 40 percent
- Blocks the disqualified resource from offering into the market

- Monitors re-testing of the regulating resource
- Re-qualifies regulating resource

PJM Member Actions

- Schedules re-test to re-qualify as regulating resource status, if desired, while adhering to regulation testing guidelines.

4.4.5 Performance Score Calculation

PJM will calculate an interval performance score that reflects a Regulation resource's accuracy in increasing or decreasing its output to provide frequency Regulation service in response to PJM's dispatch signal. With the PSCE, PJM will collect Regulation signal data every 10 seconds and resource operating parameters that will be inputs into the performance score. The performance score calculation evaluates each resource's accuracy in following the AGC signal.

PSCE Assumptions

Unless a resource owner elects to send additional data to detail operational decisions, it is assumed that resources are allocating the Regulation control signal proportionally and operating around the PJM Individual Generator Dispatch (IGD) set point. If a resource elects to use something other than proportional dispatch, the resource must send Operation Midpoint and Resource Allocation described in Section 4.3.2, Regulation Signal, of this manual.

Performance Score

For each 10 second interval starting from Time 0 +10, PJM will calculate a Performance Score as a function of the difference in the energy provided versus the energy requested by the regulation signal while scaling for the number of samples. For each 10 second sample averaged over an interval basis, PJM calculates the Performance Score as the absolute error (ε) as a function of the resource's regulation capacity, as:

$$Error = Avg\ of\ Abs\left|\frac{Abs\left(Response_{10sec} - Signal_{10sec}\right)}{0.5 * IntervalSignal_{AvgAbs} + 0.5 * AReg}\right|$$

$$IntervalSignal_{AvgAbs} = \frac{1}{n}\text{false}\sum Abs\left(Signal\right)$$

$$\begin{matrix} Performance \\ Score \end{matrix} = 1 - \frac{1}{n}\left[\ Abs(\ Error)\right.$$

Where n is the number of samples in the interval and AReg is the assigned Regulation megawatt per product, RegUp or RegDn. The performance score allows a 10 second latency for signal propagation delay for regulating resources.

For periods when assigned regulation is zero, no score will be calculated. Performance score will be calculated with all applicable samples. Null scores will not be included in the interval average performance score.

PJM Actions

- PJM will calculate the performance score for each regulating resource after the operational interval and report the score to resource owners per product, RegUp or RegDn.

PJM Member Actions

- None

4.4.6 Use of Performance Groups in the Performance Score

Resources may elect to use a performance group for performance score evaluation. Performance groups can only be created for resources that satisfy one of the following criteria:

- Resources not eligible for LOC and total to less than or equal to 10 MW across Transmission Owner boundaries.
- A performance group can be any number of resources not eligible for LOC inside a Transmission Owner's boundary.
- Resources within a fleet with equivalent applicable offers and point of interconnection.

Resources that are part of a performance group will send the Operational Midpoints and Resource Allocation of the group total Regulation for the grouped resources as described in Section 4.3.2, Regulation Signal. Each resource will be metered independently.

PJM Actions

- PJM will receive additional control data to be used in the performance score calculation to be reflected resource owner's dispatch.

PJM Member Actions

- Resource owners will notify PJM via **RegulationTesting@pjm.com** that they satisfy one of the performance group criteria.
- Resource owners will add required information to their data transfer link to PJM.

4.4.7 Performance Scores During Periods With Insufficient Data

In rare cases of data disruption, circumstances may arise when PJM does not have sufficient data to calculate performance scores. During these disruptions, PJM will calculate performance scores for all intervals with at least 15 contiguous minutes of sufficient data. All intervals with performance scores, and only those intervals, will contribute equally to the interval performance score. In the event that an operating interval does not contain 15 contiguous minutes of sufficient data, the historical score will be used as the interval performance score for that operating interval.

PJM will also use the historical score as the interval performance score for an operating interval when a partial-interval Regulation assignment does not result in 15 contiguous minutes of sufficient data.

PJM Actions

- PJM uses the current operating day historical performance score for an operating interval where input data for performance score calculations last for greater than 15 minutes.
- PJM will use operating day historical performance score when partial-interval Regulation assignment results in less than 15 minutes of data.

4.4.8 Performance Scores for Regulation Assignments With Limited Notification

Performance scoring will begin 10 minutes after PJM Dispatch logs a resource to provide Regulation service. This will not impact the length of time a resource is considered to be providing regulation service for settlement calculations. For purposes of scoring under Performance Scores During Periods With Insufficient Data, Section 4.5.7, the 15 contiguous minutes condition will begin 10 minutes after PJM Dispatch logs a resource to provide regulation service.

PJM Actions

- PJM Dispatch logs the time of the start for the Regulation assignment.
- PJM will score performance starting 10 minutes after the PJM dispatch log indicates resource start time.

4.4.9 Regulation De-assignment

Self de-assignment results in zero score for the remainder of the commitment period. PJM Dispatcher de-assignment does not impact performance score.

PJM Actions

- PJM will assign zero in performance score for self-de-assignment for the remainder assigned interval.

PJM Member Actions

- None

4.5 Black Start Service

Black Start Capability is necessary to restore the PJM transmission system following a blackout. Resources participating in PJM's Black Start Service, known as Black Start units enables PJM and Transmission Owners, to re-energize the transmission system.

Black Start Units, are able to start without an outside electrical supply; or, have demonstrated a high operating factor (subject to PJM approval) to remain operating, at reduced levels, when

automatically disconnected from the grid. The planning and maintenance of adequate Black Start Capability for restoration of the PJM balancing area following a blackout represents a benefit to all transmission customers. All Transmission Customers must therefore take this service from PJM.

Some Black Start Units are designated as Fuel Assured Black Start Units and these units are capable of running 16 hours or more at full load during a restoration event.

Black Start Service can be provided by either fuel assured or non-fuel assured units that participate in system restoration. Such units may be eligible for compensation under Black Start Service. If a partial or system-wide blackout occurs, Black Start Units can assist in the restoration of the PJM balancing area.

4.5.1 Additional PJM Requirements

The following is a summary of PJM Manuals that include information about PJM requirements for providing Black Start Service:

PJM Manual 12: Balancing Operations

- Section 4.5: Black Start Service
- Attachment C: PJM Black Start Test Report Form – includes link to forms on PJM website:
  - PJM Black Start Test Form
  - PJM Auto Load Reject Test Report Form
  - PJM Black Start Formulaic Cost Data Form
  - PJM Black Start Actual Cost Data Form

PJM Manual 10: Pre-Scheduling Operations

- Section 2: Generation Outage Reporting

PJM Manual 1: Control Center and Data Exchange Requirements

- Section 5: Meter Accuracy Standards

PJM Manual 14D: Generation Operational Requirements

- Section 10: Black Start Generation Procurement
- Attachment E: PJM Generator and Synchronous Condenser Reactive Capability Testing

PJM Manual 27: Open Access Transmission Tariff Accounting

- Section 7: Black Start Service Accounting

PJM Manual 36: System Restoration

- Section 6: Generation
- Section 8: System Restoration Plan Guidelines

- Attachment A: Minimum Critical Black Start Requirement

4.5.2 Restoration Assumptions

Transmission Customers must purchase Black Start Capability from PJM. Generation resources providing this service must successfully pass the requirements for Black Start Capability.

PJM, in collaboration with the Transmission Owners, is responsible for identifying the generating units that are critical for PJM balancing area system restoration. During restoration activities, the Transmission Owner manages and deploys the Black Start Capability, as needed, depending on the specific situation. PJM, in collaboration with the Transmission Owners, is also responsible for selecting fuel assured black start generation units to meet a zone's fuel assurance requirements as defined in Manual 36.

The Transmission Owners have developed, and shall annually review, the restoration plan. The annual update of the Transmission Owner's restoration plan may highlight the need for changes to the black start requirement. The Transmission Owner will alert PJM of these situations to allow PJM to acquire more black start generation, if needed, through the Black Start Incremental request for proposal Process documented in Manual 14D.

PJM is responsible for coordinating payments for all Black Start Capability directly to the generating facilities that provide the service. Credits and charges are determined as described in PJM Manual 27: Open Access Transmission Tariff Accounting. Cost recovery provisions for Black Start Service units are detailed in the Tariff Schedule 6A, Black Start Service.

4.5.3 Jurisdiction

Following the complete loss of system generation (blackout), it will be necessary to establish initial generation that can supply a source of electric power to other system generation and begin system restoration. These initiating generators are referred to as system black start generators. They must be able to self-start without any source of off-site electric power and maintain adequate voltage and frequency while energizing isolated transmission facilities and the auxiliary loads of other generators. Generators that can safely reject load down to their auxiliary load, or an isolated island of load, are another form of black start generator that can aid system restoration. Black Start generators may be fuel assured or non-fuel assured.

4.5.4 Definitions

- **Black Start Unit** – A single generator that is able to start without an outside electrical supply; or, the demonstrated ability of a base load unit to remain operating, at reduced levels, when automatically disconnected from the grid.
- **Fuel Assured Black Start Unit** – A single generator that is able to start without an outside electrical supply and running 16 hours or more at full load and either stores at least 16 hours of fuel on site, can operate independently on 2 or more interstate pipelines, is directly connected to a natural gas gathering system or is an intermittent or hybrid resource

that has been evaluated by the Transmission Provider to be capable of providing 16 hours of full load operation with 90% confidence and meets all other requirements for Black Start Units.

- **Black Start Plant** – A plant that includes Black Start Units and/or Fuel Assured Black Start Units. A Black Start Plant with Black Start Units at different voltage levels (electrically separated) will be considered multiple Black Start Plants.

4.5.5 Objectives of Determining Black Start Criticality

- Provide sufficient amount and redundancy of black start resources to initiate an orderly restoration of critical transmission system components and provide cranking power to generation facilities within PJM.
- Provide sufficient off-site power to ensure restart for nuclear facilities within PJM within the acceptable time-frame.
- Provide operational flexibility to address alternate system restoration scenarios as required by facility failures and outages.

Critical black start generation is used to restore generator auxiliary load or other critical load to facilitate the system restoration process.

4.5.6 Assumptions

- Once a Black Start Unit is started, it can be used to facilitate the startup of other units (black start or not) at the same plant.
- Designated critical black start generation is identified as such in each Transmission Owner's restoration plan.
- Redundancy of critical Black Start Units is desirable due to the possibility of a unit's failure to start or the failure of a transmission facility, preventing Black Start Units from serving their intended loads.

4.5.7 Minimum Critical Black Start Unit and Fuel Assurance Black Start Unit Requirements

PJM Manual 36: System Restoration, Attachment A: Minimum Critical Black Start Requirement, defines the minimum critical black start by transmission zone. In general, there must be sufficient critical black start to serve critical load (plus a 10 percent margin) and a minimum of two critical Black Start Units for each transmission zone that has a critical load requirement. To provide additional restoration reliability, Manual 36 also requires that every zone have at least one Fuel Assured Black Start Unit or two non-fuel assured Black Start Units connected to different pipelines. Each transmission zone is also required to have no natural gas non-fuel Assured Black Start Units whose unavailability during a restoration event would lead to an incremental restoration time increase of 10 hours or more. Exceptions to these requirements will be heard on a case-by-case basis, and must be approved by PJM and seek endorsement by the PJM System Operation Subcommittee – Transmission.

PJM, in its role as Transmission Operator, is responsible for selecting the black start resources for a system restoration plan. PJM would work closely with the Transmission Owners to identify these units based on:

- Critical load requirements
- Available black start resources
- Minimum number of black start resources allocated to a zone
- Possible cross-zonal coordination opportunities
- Zonal black start fuel assurance requirements

The Transmission Owner will adjust its system restoration plan based on the Black Start Units allocated to it from this selection process. The Transmission Owner has the option of procuring additional black start resources (if not already procured by PJM), but the costs of these resources will be recovered, if necessary, outside of the OATT.

Should there be a disagreement about the location, amount or number of black start resources, or disagreement between the supplying Transmission Owners, receiving Transmission Owner, or PJM about cross-zonal coordination, the following process will be followed:

- The parties involved would bring the issue to the SOS-T for consultation.
- If the parties continue to disagree, the issues would be referred to the Dispute Resolution Process as detailed in Schedule 5 of the PJM Operating Agreement.
- A general notification of initiation and result of Dispute Resolution process will be given to the Operating Committee.

4.5.8 Product Description

Black Start Service - A generating unit is defined as “black start capable” or as a Black Start Unit if the following conditions are met:

- The generating unit has the ability of being started and can close an output circuit breaker to a dead bus without energy from any other generating units; or, demonstrated ability to operate at reduced levels upon automatic isolation from the grid in such a way that it meets all requirements stated in the Performance Standards and Testing sections of this document.
- The generating unit owner and PJM have agreed that the unit should be designated as black start capable.
- The generating unit is located where Black Start Capability is determined by PJM and all affected Transmission Owners to be useful to system restoration and will be incorporated into the restoration plans of all affected Transmission Owners.
- The generating unit must have the ability to close the output breaker to a dead bus within three hours of the request from the local Transmission Owner or PJM. PJM may require some black start resources to adhere to less than a three-hour start time given critical load restoration timing requirements. These units will be notified of this timing requirement and

tested to it during annual black start testing. PJM recognizes that black start resources with three-hour start times may not be appropriate to meet nuclear power off-site safe-shutdown load restoration requirements. PJM will allow exceptions to this three-hour start time requirement, if needed, on a case-by-case basis.

- A generating unit that is needed for system restoration and participates in Black Start Service tests and system restoration drills may be eligible for compensation under Black Start Service.

Fuel Assured Black Start Unit Qualifications - A generating unit is defined as a "Fuel Assured Black Start Unit" if it meets all the requirements for Black Start service and the following conditions are met:

- The Black Start Unit owner and PJM have agreed that the Black Start Unit should be designated as a fuel assured Black Start Unit based on the requirements in Tariff, Schedule 6A, and the PJM Manuals.
- The Black Start Unit either stores at least 16 hours of fuel on site, can operate independently on 2 or more interstate pipelines, is directly connected to a natural gas gathering system or is an intermittent or hybrid resource that has been evaluated by the PJM to be capable of providing 16 hours of full load operation with 90% confidence.
- Fuel Assured Black Start units can be thermal, hydro, energy storage, intermittent, hybrid, or distributed energy/demand resources with onsite generator resources, if they can meet the Black Start Service requirements in PJM's Open Access Transmission Tariff and this Manual 12.

4.5.9 Generator Owner's Commitment

For Black Start Units on the base formula rate, the Generation Owner shall be committed to provide Black Start Capability:

- Black Start Units that entered Black Start Service on the base formula rate or on a capital recovery rate before June 6, 2021 that has transitioned to the base formula rate, or became fuel assured under the base formula rate shall commit initially for at least two years to provide Black Start Service from the Black Start Service implementation date, with an annual right to terminate by each party (the Generation Owner and the Transmission Owner) with one year’s advance notice. In the event that neither the Black Start Unit owner nor the Transmission Owner exercises its right to terminate by providing a one year’s advance notice of termination, the commitment to provide Black Start Service automatically will be extended until such termination notice is provided. If, due to an event of force majeure, a Generation Owner cannot provide Black Start Service, the commitment requirements stated above shall not be binding.
- Changes in cost may be made annually, but will become effective in the second year of commitment.
- In the event that a Black Start Unit fails to fulfill its two-year rolling commitment to provide Black Start Service, the Black Start Unit owner shall forfeit the received monthly Black Start

Service revenues for the period of its non-performance not to exceed revenues for a maximum of one year.

- A failure by a Black Start Unit to complete its applicable annual black start requalification test or failure of the annual test does not serve as notification of the Black Start Unit owner's intent to terminate Black Start Service, nor does it serve as notification to start the Black Start Replacement Process described in Manual 14D.
- Black Start Unit owners shall commit to supplying an update to the Black Start Service cost formula as detailed in Schedule 6A of the Tariff via eDART upload process using the black start forms using the link in Attachment C of this manual.

For new Black Start Units entering Black Start Service and/or qualifying as a Fuel Assured Black Start Unit under a Capital Cost Recovery Rate or incurring additional capital costs to continue Black Start Service:

- A Black Start Unit that entered Black Start Service or qualifying as a Fuel Assured Black Start Unit under a capital recovery rate or after incurring additional capital costs to continue Black Start Service on or after June 6, 2021 has a commitment to provide Black Start Service for the capital recovery period plus the remaining life of the Black Start equipment. After entering Black Start Service. such units may terminate the provision of Black Start Service with one year's advance notice and consent of the Transmission Provider (or its commitment period may be involuntarily terminated) provided the Black Start Unit demonstrates to the satisfaction of the Transmission Provider at least one of the following reasons for such termination apply:
    - Black Start Unit retirement or deactivation;
    - Expiration of a state, federal, or other governmental agency permit(s) required for Black Start Service without the potential for renewal absent major capital additions; or
    - Capital additions are required by the Black Start Unit owner to maintain Black Start Service capability (in which case, the Black Start Unit is required to submit those costs into a Black Start Service Request for Proposal if issued by the Transmission Provider in accordance with the procedures set forth in Manual 14D and only continue to provide Black Start Service if selected for Black Start Service by the Transmission Provider).
- New Black Start Unit owners recovering capital cost under either Capital Cost Recovery Rate in the Tariff Schedule 6A shall provide PJM an estimated annual revenue requirement based on the most current cost data at the time the unit enters Black Start Service or becomes fuel assured.
- New Black Start Unit owners will submit capital cost documentation to PJM and the IMM within three months after entering Black Start Service or qualifying to be a Fuel Assured Black Start Unit. Acceptable documentation may consist of:
    - Third-party invoices supporting costs for contractor services and materials
    - Time sheets or other project tracking documentation for internal labor costs (components of labor rates) including rate sheets and applicable overheads

  - When applications and certificates for payment are used to confirm completion of any portion of a project, they must be signed and notarized. The signature and notarization must be visible on any copies provided.
  - When internal costs are charged to the project, they must include documentation supporting all costs which will be included and a breakdown of how the costs were developed.
- New Black Start Unit owners will submit annual revenue costs including variable black start and fuel storage costs (if applicable) to PJM and the IMM within three months after entering Black Start Service or qualifying to be a Fuel Assured Black Start Unit.
  - The annual black start revenue requirement may include annualized capital costs, black start operating and maintenance costs, existing unit level annual VOM cost, and NERC standard compliance costs, all of which must include complete supporting documentation.
  - If the Black Start Unit can be fired on oil, additional required documentation includes support for the claimed minimum tank suction level(s), size of tanks and fuel burn rates. If the tank is shared with other resources, a complete explanation with all supporting data of how tank use is shared and the allocation factor(s) used.
- Fuel Assured Black Start Unit Owners whose unit's become fuel assured via a capital recovery rate shall clearly designate the alternative fuel assured schedule as such in Markets Gateway when that fuel is offered in either the Day-Ahead or Real-Time Energy Market

4.5.10 Performance Standards

Each Black Start Unit shall meet the following performance standards:

- The ability to self-start without any source of electric power from another PJM Capacity Resource within three hours or the time defined in the Transmission Owner's system restoration plan, as demonstrated through testing; or, the demonstrated ability to operate at reduced levels when automatically disconnected from the grid.
- The ability to close into a dead (de-energized) bus. This may be demonstrated by (a) physically closing the generator breaker connected to a dead bus while the unit is running or (b) by a test that simulates closing the generator breaker while only the generator side of the breaker is energized or to a live bus.
- If the unit has the ability to operate at reduced levels when automatically disconnected from the grid, this may be demonstrated by (a) physically removing the unit from the grid while the unit is running or (b) by a test that simulates removing the unit from the grid.
- The capability to maintain frequency under varying load. This may be demonstrated by (a) picking up an isolated block of load, or (b) by appropriate dynamic off-line testing of the governor controls.
- The capability to maintain voltage under varying load. This may be demonstrated by (a) picking up an isolated load, (b) producing both leading and lagging VARs by varying the

voltage setting while the unit is synchronized to the system, or (c) by appropriate dynamic off-line testing of the voltage controls.

- Ability to maintain rated output for the duration identified by the Transmission Owner's system restoration plan. Requirements for supply to gas fueled Black Start Units should be considered in the Transmission Owner's system restoration plan. Specific gas supply requirements include, but are not limited to, electric feed to gas gate valves, or local gas compressors needed to maintain gas supply during the restoration process.
- In addition to these unit-specific performance standards, each black start Generation Owner must maintain procedures for the startup of black start generation at each black start generating station. These standards shall remain in effect for the duration of the commitment.

Each Fuel Assured Black Start Unit shall also meet the following additional performance standards:

- A Fuel Assured Black Start Unit shall store sufficient fuel and related non-fuel consumable to provide at least 3 starts and 16 hours of full load operation, unless the unit can operate independently on 2 or more interstate pipelines, is directly connected to a natural gas well gathering system or is an intermittent or hybrid resource that has been evaluated by the PJM as being capable of providing 16 hours of full load operation with 90% confidence.
- Each Fuel Assured Unit must provide fuel/energy verification to PJM upon PJM request. Fuel/energy level telemetry to PJM is an acceptable form of verification. For natural gas resources, PJM will validate all contractual arrangements for gas supply/delivery. Fuel assured Black Start Generation Owners shall provide certification that 16 hours of fuel and non-fuel consumables inventory per designated fuel assured unit was maintained on site in the last 12 months as part of their Annual Black Start Test. Certification of fuel inventory may be included on the PJM Black Start Test Report Form (Attachment C).
- If the on-site fuel or related non-fuel consumable inventory of a Fuel Assured Black Start Unit falls below the run hour and/or starts requirements for any length of time during any period, PJM must be notified within 24 hours. Note that this also applies to Fuel Assured Black Start Units that can also operate independently on 2 or more interstate pipelines.
- Fuel Assured Black Start Units with dual fuel shall perform an annual test on both fuels, except when the Fuel assured Black Start Unit can also operate independently on 2 or more interstate pipelines.
- Fuel Assured Black Start Units must provide details of their emissions permit limitations for review as requested by PJM. In order to provide additional flexibility during a restoration event, Fuel Assured Black Start Units will make best efforts to obtain emission (e.g. Title V) and effluent (e.g. NPDES) permit modifications and/or waivers to accommodate operations during a restoration situation (operating below normal economic min values), if available and feasible. This additional flexibility is above and beyond PJM's determination that the black start resource is technically viable to be selected as a Fuel Assured Black Start Unit.

4.5.11 PJM Obligations

Generators that commit to provide Black Start Service shall not have their black start capable designation terminated within the time of their commitment. PJM shall provide a one year's advance notice to the owner or owners of generating units that are providing Black Start Service prior to terminating that unit's designation as black start capable unless the non-performance criteria of Section 4.5.14 apply.

Designated black start generating units shall recognize that PJM shall have the authority to ensure a minimum amount of black start capacity when deciding whether to approve generator outages. Critical Black Start Units will have additional planned outage restrictions as defined in Section 2 of PJM Manual 10: Pre-Scheduling Operations.

For run of river hydro resources to qualify as Fuel Assured Black Start Units, PJM will calculate both fuel assured and non-fuel assured confidence level using unit specific historical data submitted to PJM. This historical data includes hourly streamflow data, minimum & maximum flows, and exigent & ordinary storage converted into MWh. For non-fuel assured resources PJM will calculate a yearly confidence level based on a simple average of the number of days the unit can provide its black start ICAP for 16 hours in a day. The overall confidence level for the historical years is calculated using an ELCC weather weighted average. For Fuel Assured Black Start Units, PJM will iterate the Black Start MWs in the non fuel assured calculation to obtain an ELCC weather weighted confidence level of 90% on a monthly basis.

For intermittent and hybrid resources to qualify as Fuel Assured Black Start Units, PJM will calculate both fuel assured and non-fuel assured intermittent and hybrid resource's confidence level using unit specific historical data submitted to PJM. For non-fuel assured Black Start Units which are intermittent and hybrid resources, PJM will calculates a yearly confidence level based on a simple average of the number of days the unit can provide its black start ICAP for 16 hours in a day. The overall confidence level for the historical years is calculated using an ELCC weather weighted average. For Black Start Fuel Assured Units which are intermittent and hybrid resources, PJM will iterate the Black Start MWs in the non-fuel assured calculation to obtain an ELCC weather weighed confidence level of 90% on a monthly basis.

4.5.12 Testing

Every generating unit that is providing Black Start Capability shall be tested to verify that it can be started and operated without being connected to the PJM power system. Black Start Unit owners/operators shall annually schedule tests of resources providing Black Start Capability to confirm the ability of such resources to meet the applicable standards for performance and control.

Tests may be scheduled at the discretion of the Generation Owner; however, tests must be prescheduled with PJM prior to the test. Compensation for energy output delivered to the system shall be provided for the unit's minimum run time at the higher of the unit's cost-capped offer or real-time LMP, plus start-up and no-load costs for up to two start attempts, if necessary.

Any unrecovered costs of black start tests should be submitted in writing to the Manager of Market Settlements.

For units with high operating rates and the ability to remain operating at reduced levels when automatically disconnected from the grid, an opportunity cost will be provided to compensate the unit for lost revenue during the black start testing.

Annual tests shall include:

- Starting and bringing the resource to synchronous speed without assistance from a system electrical feed; or, demonstrating the ability to remain operating at reduced levels when automatically disconnected from the grid
- Testing of all communication circuits
- Actual or simulated switching needed to connect the Black Start Unit to the transmission system following a system blackout
- Testing the features unique to each facility that relate to Black Start Service
- For new Units:
    - For a generator that is a new Black Start Unit, revenue requirements must be submitted to PJM and the IMM through the eDART upload process. Next, the unit must successfully pass a Black Start Service test according to their plant's procedures (and restoration plan requirements) and submit the test results to PJM using the PJM Black Start Test Report Form (Attachment C). Upon successful completion of the Black Start Service test, the payment start date is the first day of the next month following the receipt of both test and cost data.
- For Units Integrating Into PJM:
    - For an existing Black Start Unit that has recently been integrated into the PJM Region, the Black Start Unit owner must send revenue requirements to PJM and the IMM through the eDART upload process at least one month prior to joining PJM. The unit must successfully pass a Black Start Service test within six months of integration, then submit the test results to PJM using the PJM Black Start Test Report Form (Attachment C). The payment start date is the first day of integration.
- For Recertifying Units:
    - After the Black Start Unit has been decertified due to failure to complete testing requirements, the Black Start Unit will be considered a new unit for purposes of testing, and must recertify by conducting a successful Black Start Service test. PJM will reinstate the unit's payment in the next month after the successful test is performed.
- For Dual Fuel Black Start Units:
    - Fuel Assured Black Start Units with dual fuel shall conduct an annual test on both fuels except when the Fuel Assured Black Start Unit can also operate independently on 2 or more interstate pipelines.

- Fuel Assured Black Start Generation Owners shall certify 16 hours of fuel inventory and non-fuel consumables were maintained for the last 12 months on the PJM Black Start test form. Periods when 16 hours of fuel or non-fuel consumables were not maintained shall be noted along with any allowable exceptions i.e. tank inspection or PAI.

4.5.13 Testing and Training Standards and Records

Each black start generating unit shall be tested to verify that it can be started and operated without being connected to the system. The black start generating unit owner/operator shall annually test the start-up and operation of each black start generating unit. Multiple tests may be attempted following the identification and reporting of corrective actions (see Section 4.5.14, Non-Performance). Testing records shall include:

- Date(s) of test(s)
- Duration of test(s) from start of test until unit is online
- Test conditions (ambient temperature, general weather conditions)
- Fuel being used during the test
- Indication of whether the unit was able to start without being connected to the system or demonstration of the ability to disconnect from the grid automatically and remain operating at reduced levels
- Start time of Black Start Unit from beginning of startup until the unit connects to the dead bus
- Indication of the ability to close a circuit breaker into a dead bus
- Indication of the ability to remain stable and control voltages while operating isolated from the transmission grid and supplying the source's own auxiliary load for a period of at least 30 minutes
- Description of the cranking path of the unit
- Description of startup of auxiliary equipment required for startup and operation of the next non-Black Start Unit
- Description of communications and control systems that are capable of allowing SCADA/EMS data and voice communications, as defined in the PJM Control Center and Data Exchange Requirements Manual
- Explanation of failed test and corrective actions taken
- Description of operator training
- Dates of training
- Copies of black start procedures
- Certification of fuel and non-fuel consumable inventory
- If the item is not tested the Generator Owner must submit an explanation on the black start testing form explaining why the item was not tested.

Documentation of the test results of the start-up and operation of each black start generating unit shall be provided to PJM. PJM shall verify that the number, size and location of black start capable units are sufficient to meet PJM's restoration plan expectations.

Note:
If verification is done through simulation, the analytical analysis must be the result of dynamic studies that include the capacitive effects of cranking path circuits, unit reactive capabilities, possible steady-state and transient switching voltages, acceptable frequency and proper modeling of large auxiliary motors required in startup.

4.5.14 Non-Performance

To collect monthly black start revenues, a unit compensated under Black Start Service must have a successful black start test on record with PJM within the last 13 months. Fuel Assured Black Start Units with dual fuel must have a test on both fuels within the last 13 months, except when the Fuel Assured Black Start Unit can operate independently on 2 or more interstate pipelines. Black Start Units providing Black Start Service under the Tariff, Schedule 6A or under a service agreement with the Transmission Owner are required to have a successful black start test on record with PJM within the last 13 months. Once a generator is qualified, they have until the end of the 13th month following the last successful black start test date to submit documentation of the next successful annual test to PJM. Units are encouraged to adopt an annual testing cycle allowing the extra month to be reserved for retesting or scheduling conflicts.

If a unit fails a black start test, the unit is given a 10 day grace period within which it may re-test without financial penalty if within the 13 month testing period. If the unit does not successfully pass a black start test within the 10 day grace period immediately following a failed test, monthly black start revenues will be forfeited from the time of the first day of the month in which the unsuccessful test occurred until the first day of the first month **after** the unit successfully passes a black start test. If the Black Start Unit owner does not make the necessary repairs to enable the Black Start Unit to pass the annual test within a 90 day period, the Black Start Unit will immediately cease to qualify as a Black Start Unit unless the 90 day period is extended up to one year with PJM approval. If the 90 day period is extended, the Black Start Unit owner will continue to forfeit all black start revenues starting from the first day of the month in which the unsuccessful test occurred until the first day of the month **after** the unit successfully passes a black start test.

Fuel Assured Black Start Units shall maintain fuel inventory and non-fuel consumables to meet the 16 hour full load operation requirement at all times. Black start monthly revenues will be foregone for months in which the fuel inventory and/or non-fuel consumables is deficient. Exceptions to this requirement would be the following:

- An approved outage (full derate) for a regulatory requirement

- Low fuel and/or non-fuel consumable inventory due to operating during a PAI. If a unit goes below the 16 hour full load operation requirement as the result of a PAI, fuel and non-fuel consumables shall be restored to the 16 hour requirement as soon as possible.

PJM Actions

- The PJM Performance Compliance department will work directly with the Black Start Unit owner to determine a schedule to complete repairs in order to return Black Start Capability and successfully black start test. Upon PJM acceptance, repair work to include, as necessary, documented equipment procurement, scheduled outage periods dedicated to repairs, and a monthly review with the Black Start Unit owner until the work is complete and successful black start testing. PJM will provide progress information to the IMM once received from the Black Start Unit owner.
- The PJM Performance Compliance department will collect and analyze the black atart test data as described above from each black start unit to determine each unit's eligibility for Black Start Service payments. PJM will notify the MOC or unit owner, as applicable, within five business days of test submittal of unit's failure.
- The PJM Performance Compliance department will notify the LCC if a Black Start Unit in their zone fails to complete a successful black start test in the required timeframe. The PJM Performance Compliance department will also notify the LCC when units that failed black start tests are again eligible after completing a successful test.
- The PJM Performance Compliance department will maintain the list of eligible Black Start Units and forward any changes to PJM Market Settlements.
- The PJM IMM will analyze any requested generator black start cost changes on an annual basis and forward all approved revenue requirements to PJM Market Settlements. The approved revenue requirements will be applied by PJM Market Settlements to Black Start Service payments starting with the month following the submission of the black start cost changes.

PJM Member Actions

- Black Start Generation Owners will notify the PJM Performance Compliance department via Blackstart@pjm.com, as well as the LCC in whose zone the Black Start Unit operates, of the expected black start test date. Proposed testing dates and times should be communicated via eDART to PJM Dispatch and the Transmission Owner no later than 3 business days prior to the test.
- Black Start Generation Owners will notify PJM Dispatch prior to start of the black start test.
- Black Start Generation Owners will report black start test results using the PJM Black Start Test Report Form (link in Attachment C of this manual). Test results should be submitted within 14 days following the black start test or no later than the 25th of each month. Units submitting successful tests after the 25th of the month may have their revenues deferred to the following month. Generation Owners with auto load reject units will report their testing results using the PJM Auto Load Reject Test Report Form (link in Attachment C of this

manual). Completed forms and other requested data will be submitted to the PJM Performance Compliance department using the eDART XLS Upload Process.

- Black Start Generation Owners may request changes to their Schedule 6A revenue requirements (formulaic costs) annually by completing the PJM Black Start Formulaic Cost Data Form (link in Attachment C of this manual). Formulaic cost data requests will be reviewed and approved by the PJM IMM. Alternatively, Black Start Generation Owners may request changes to their actual costs annually by completing the PJM Black Start Actual Cost Data Form (link in Attachment C of this manual). Completed cost data forms and other requested data will be submitted with appropriate documentation to the PJM IMM for analysis using the eDART XLS Upload Process; however, actual cost change requests must be filed with appropriate documentation to FERC for approval.

4.5.15 Termination of Black Start Service

In the event a Black Start Unit intends to terminate Black Start Service, the Black Start Unit owner shall notify PJM of its intent to terminate Black Start Service using the steps described in the Black Start Replacement Process described in Manual 14D.

In accordance with the provision of PJM Tariff Schedule 6A, the unit owner must give one year's advance notice of intent to terminate Black Start Service to allow time for the Black Start Replacement Process. Black Start units with a lifetime of the black start equipment commitment must also meet the requirements of Manual 12 Section 4.5.9 above.

PJM Member Actions

- Follow actions for the Black Start Replacement Process as described in Manual 14D.

4.5.16 Black Start Service Unit Substitution

A generating unit capable of providing Black Start Service, that is at the same Black Start Plant, is on the same voltage level and cranking path, similar age unit (within 5 years), and provides equivalent Black Start Unit Capacity may be substituted for an existing Black Start Unit. PJM will provide the IMM with documentation supporting any substitutions for a Black Start Unit. The black start annual revenue requirement for a substituted unit(s) will be reviewed by the PJM IMM and approved by PJM. A new annual revenue requirement to be completed prior to substitution, and will not include any additional capital expenditures or increase in capital recovery commitment period. All substitutions must have PJM and Transmission Owners approval before a substitution is made.

- A Black Start Unit used as a substitute must have had a valid annual test within the previous 13 months. Black Start testing for substitute units are to follow the testing guidelines and submittals as documented in this manual.
- Black Start Unit substitutions may be permitted for other technical reasons provided by the Generation Owner.
- Black Start Unit substitutions can only be made once every 12 months.

PJM Actions:

- Review non-critical black start test submittals and update the testing status with the impacted Transmission Owner(s).
- Review requests for Black Start Unit substitution to determine Black Start Capability and receive concurrence with the impacted Transmission Owner(s).
- Review annual revenue requirement with PJM IMM and approve by PJM.

PJM TO Member Actions:

- Add Black Start Unit Capability to the impacted Transmission Owner(s) System Restoration Plan(s).

PJM GO Members:

- Substitution requests are to be submitted with 40 days advance notice.
- Request Black Start Unit substitution to PJM using via Blackstart@pjm.com email.
- Submit substituted unit formulaic cost data to PJM and PJM IMM using the PJM Black Start Formulaic Cost Data Form (link in Attachment C of this manual).

Section 5: Transmission Facility Control

Welcome to the Transmission Facility Control section of Manual 12. In this section you will find the following information:

- Identifies major problems and the means of correction (see Corrective Control Strategies)
- How PJM controls for reactive limits (see Reactive Limitation Control)
- How PJM controls voltage (see Voltage Control)
- How PJM responds to overloaded transmission facilities (see Thermal Overloaded Transmission)
- How PJM addresses Generator Stability Limitations (see Stability Limited Generation
- Description of regional reliability coordination (see Reliability Coordination Plan)

5.1 Corrective Control Strategies

Below are the major electrical network problems that can occur in the PJM RTO and the primary (or most effective) means of overcoming these problems. The Corrective Control Strategies Exhibit identifies the major problems as:

- Overloads (pre/post contingency/reactive) and excessive transfers between areas within the PJM RTO
- Transmission system low voltage conditions
- Transmission system high voltage conditions
- Power system low frequency conditions
- Power system high frequency conditions

PJM RTO Problems					
Typical Means of Control	**Overloads & Excess Transfers**	**Low Transmission Voltage**	**High Transmission Voltage**	**Low Frequency Conditions**	**High Frequency Conditions**
Generator Megawatt Adjustment	Raise/ Lower MW			Start Up Generators	Shut Down Generators
Phase Angle Regulator Adjustment	Increase/ Decrease Phase Angle				

PJM RTO Problems					
Typical Means of Control	**Overloads & Excess Transfers**	**Low Transmission Voltage**	**High Transmission Voltage**	**Low Frequency Conditions**	**High Frequency Conditions**
PJM Interchange Schedule Adjustment	Adjust Import/ Export MW		Increase MW Flow Across PJM Balancing Area		
External Interchange Schedule Adjustment	Adjust External Interchange Schedules				
Generator Reactive Power Adjustment		Increase Excitation	Decrease Excitation		
Transformer Tap Adjustment		Raise/Lower Tap Position	Raise/Lower Tap Position		
Shunt Capacitor Switching		Connect to Grid	Disconnect From Grid		
Shunt Reactor Switching		Disconnect From Grid	Connect to Grid		
Synchronous Condenser Adjustment		Increase Excitation	Decrease Excitation		
Transmission Line Switching	Selected Line Switching		Outage Pre-Studied Lines		
Circuit Breaker Switching	Change Network Topology			Change Network Topology	Change Network Topology

PJM RTO Problems					
Typical Means of Control	**Overloads & Excess Transfers**	**Low Transmission Voltage**	**High Transmission Voltage**	**Low Frequency Conditions**	**High Frequency Conditions**
Pumped Storage Pump Operation	Change Pump Status	Shut Down Pumps	Start Up Pumps	Shut Down Pumps	Start Up Pumps
Pumped Storage Generator Operation	Change Generator Status	Start Up Generators	Shut Down Generators	Start Up Generators	Shut Down Generators
Customer Load Voltage Reduction	Apply As Necessary	Apply As Necessary		Apply As Necessary	
Customer Load Shedding	Apply As Necessary	Apply As Necessary		Apply As Necessary	

Exhibit 9: Corrective Control Strategies

Some of these controls are automatically applied by local closed-loop control while other controls are acted on by the individual participants upon PJM request. PJM has no direct means of controlling the generation/transmission/distribution system.

Resource re-dispatch by PJM may be done either electronically or via phone call. The RT-SCED software is used to automatically calculate economic basepoints for resources capable of following its signals. The basepoints produced by the RT-SCED application consider the impact of a specific resource on a transmission constraint such that, by following the RT-SCED basepoint, a resource can relieve a transmission constraint.

Manual dispatch is required by PJM when either a resource capable of following the RT-SCED basepoint is not doing so, or, an effective resource to relieve a transmission constraint cannot follow the RT-SCED basepoint. Manual dispatch is typically only used after economic dispatch is completely exhausted. PJM performs manual dispatch for a transmission constraint using the following steps:

- The PJM Operator identifies the constraint for which further action is required to control a potential or actual overload.

- The PJM Operator identifies the amount of relief currently needed on the constraint and considers the amount of future relief needed depending on changes in load, interchange, generation patterns, outages, etc.
- The PJM Operator validates that all economic resources available have been exhausted.
- The PJM Operator runs a distribution factor report using PJM EMS to determine the resources that are effective to resolve a potential or actual overload.
- The PJM Operator selects a set of resources that are most effective to relieve the transmission constraint and, based on the amount of relief needed and the dfax, determines the amount of curtailment required by each resource.
- The PJM Operator contacts each resource operator and communicates the amount of curtailment required.
- The PJM Operator determines the impact in MW that regulating resources have on the transmission constraint and may manually de-assign Regulation from resources that adversely impact the control of the constraint.
- The PJM Operator reassesses manual curtailments periodically and communicates adjustments or the removal of such restrictions as necessary.

The Power System Conditions Exhibit shows the type of limits that apply to various power system conditions. Nuclear power plants at various locations may have more restrictive voltage limits, imposed by nuclear licensing obligations. In these cases, such limits are to supersede the general guidance provided in the Power System Conditions Exhibit, which details the PJM baseline values. Any exceptions can be found in PJM Manual 03, Transmission Operations, section 3.3.2.

Note:
Thermal and reactive constraint control includes loading of economic generation (on cost) generation.

Power System Conditions		
Types of Limits	**Pre-Contingency Normal Conditions**	**Post-Contingency Emergency Conditions**
Thermal	Actual Flow < Normal Rating	Contingency Flow < Emergency Rating
Reactive Transfer	Equivalent MW Rating	Equivalent MW Rating
Voltage – 765 kV	726.8–803.2 kV	726.8– 803.2 kV Max 8–10% kV Drop

Power System Conditions		
Types of Limits	**Pre-Contingency Normal Conditions**	**Post-Contingency Emergency Conditions**
Voltage – 500 kV	500–550 kV	500–550 kV; Max 5% kV Drop
Voltage – 345 kV	328–362 kV	328–362 kV
Voltage – 230 kV	219–242 kV	219–242 kV
Voltage – 138 kV	131–145 kV	131–145 kV
Voltage – 115 kV	109–121 kV	109–121 kV
Voltage – Customer ANSI Standard	97.5–105%	95–105.8%
Stability – Steady State	Max 60° Difference for 500 kV System	Max 50° Difference for 500 kV System
Stability – Steady State	Max 40° Difference for Generators	Max 30° Difference for Generators

Exhibit 10: Power System Limits

The next subsections describe the procedures that are followed to implement controls in response to specific problems.

5.2 Reactive Limitation Control

This section provides operating guidelines for normal and emergency control of transfer interfaces where a reactive limit is reached or exceeded.

PJM Actions

- When a reactive limit is approached or exceeded, and non-cost moves are ineffective, out-of-merit assignments are made in the most effective areas to control these limitations. The PJM dispatcher also evaluates the impact of the existing inter-area transfers and modifies the transaction schedules that adversely affect the reactive transfer limit. Prior to out-of-merit assignments, transaction schedules that are not willing to pay congestion are curtailed. If insufficient generation is available to control these limitations, the emergency procedures contained in the PJM Manual 13, Emergency Operations, are implemented.

If the emergency procedure steps (from curtailing non-firm contracts through voluntary customer load Curtailment, including implementation of the NERC TLR procedure) are insufficient to control the transfers, a Manual Load Dump Warning is issued to all Generation Owners/ Transmission Owners stating the most serious limitation and the estimated amount of load relief required. The PJM dispatcher, using all available tools, voltage drop curves, actual voltage conditions, proximity to all the different reactive transfer limits and Transmission Owner impacts, determines the most effective area for load dumping. The PJM dispatcher discusses the locations and the amount of load drop required with the affected Load Serving Entities.

- If transfers exceed a reactive transfer limit, and voltage conditions are deteriorating and the PJM dispatcher determines that the system cannot withstand the occurrence of the contingency, the PJM dispatcher orders a Manual Load Dump in the most effective area and in an amount sufficient to return the transfers to within the reactive transfer limit.

If transfers exceed the transfer limit (or a revised transfer limit, if applicable), due to the occurrence of some contingency, but additional actions other than load dumping are available and effective, these actions are first undertaken. If, however, transfers are not returned to within the limits within 30 minutes of the occurrence of the contingency, the PJM Emergency Procedures up to and including load dumping are implemented.

PJM Member Actions

- The Generation Owner/Transmission Owner dispatchers follow actions prescribed in Manual 13.

5.3 Voltage Control

The PJM RTO is operated so that normal voltage profiles are maintained at all load levels. Under normal system conditions, the following criteria are used:

- Each Load Serving Entity is able to supply its reactive load and losses locally at all load levels.
- The 500 kV system is operated so that all 500 kV bus voltages are maintained between 500 kV and 550 kV (494 kV and 540 kV in the Dominion area) on a pre-contingency basis. Maximum voltage capabilities on individual 500 kV buses are given in Attachment B.
- The 345 kV and below portion of the bulk power transmission system is operated so that all bus voltages are maintained within 5 percent of the nominal voltage on a pre-contingency basis, unless use of a different bandwidth is required because of equipment design.

No single contingency outage shall exceed either of the following limits at a 500 kV bus:

- A post-contingency voltage drop of 5 percent (0.20 PU in the Dominion area) on 500 kV facilities.

- A post-contingency angular difference which is 10 degrees less than the setting of the synchro-check relay. Synchro-check relays are set to 60° for 500 kV terminals and 40° for generators.

PJM regularly examines system conditions for potential voltage problems and advises the PJM dispatcher of measures that must be taken to maintain the system within the criteria.

The Generation Owner/Transmission Owner dispatchers establish system voltage control by using controllable reactive sources and load tap changers, including generators, synchronous condensers and switched capacitors. After the controllable reactive sources are utilized, Load Tap Changing (LTC) transformers may be used to adjust 500 kV and 230 kV voltages.

5.3.1 Action in a Low-Voltage Situation

If voltages are, or are expected to be, below the criteria, the following actions are taken by PJM and the Generation Owners/Transmission Owners.

PJM Actions

- The PJM dispatcher requests all Generation Owners/Transmission Owners to implement the heavy-load voltage schedule.
- The PJM dispatcher requests that synchronous condensers and switchable capacitors be placed in service unless studies indicate otherwise.
- The PJM dispatcher verifies that all units in operation are supplying maximum MVAR capability.
- The PJM dispatcher adjusts 500/230 kV transformer taps to optimize system voltage.
- If system voltages are determined to be overly sensitive to slight increases in transfer levels, the PJM dispatcher reduces power transfers into the reactive-deficient area to a value that stabilizes voltages. The PJM dispatcher re-examines system conditions and reduces the limit until voltage stability is achieved.

PJM Member Actions

- The Generation Owner/Transmission Owner dispatchers respond promptly to specific requests and directions of the PJM dispatcher.

5.3.2 500 kV System Voltage Below 500 kV

If the 500 kV system voltage is below 500 kV (or 494 kV in the Dominion area), the following actions are taken:

PJM Actions

- The PJM dispatcher issues a Manual Load Dump Warning and takes appropriate emergency procedures (see Manual 13, Emergency Operations), in the effective area.

- If the 500 kV system voltage has reached a level of, or is decaying toward, 470 kV, or any other level as determined by PJM operations planning staff, the PJM dispatcher orders sufficient load dumping in the deficient area, so as to stabilize the system voltage at 490 kV or better to protect the system from a loss of a large unit.
- The PJM dispatcher directs Transmission Owners, via the PJM ALL-CALL, to avoid taking any actions that adversely affect the 500 kV system voltage, without first obtaining approval from the PJM dispatcher. If the 345 kV system or below has reached a level of 90 percent of nominal and is continuing to decay, the PJM dispatcher orders load dumping in the deficient area, sufficient to return the system voltages to 95 percent or better.

PJM Member Actions

- The Transmission Owner dispatchers promptly dump an amount of load equal to, or in excess of, the amount requested by the PJM dispatcher.
- The Transmission Owner dispatchers report actions taken once implemented.

5.3.3 Action in a High-Voltage Situation

The following items apply to voltage control of the overall PJM 500 kV system. It should be noted that high voltage problems of a localized nature may be more effectively controlled by selective measures in the particular area.

The PJM dispatcher will follow procedures to mitigate and control high system voltages as noted in PJM Manual 03, Transmission Operations, section 3.7, High Voltage Operation and PJM Manual 13, Emergency Operations, section 2.4.7, High System Voltage.

PJM Actions

- The PJM dispatcher requests the Transmission Owners to disconnect all switchable capacitors.
- The PJM dispatcher requests system reactors be placed in service where available.
- The PJM dispatcher requests the Generation Owners/Transmission Owners to operate units to absorb reactive power.
- The PJM dispatcher requests neighboring Balancing Authorities to assist in reducing voltage.
- The PJM dispatcher requests the Transmission Owners to adjust 500/230 kV transformer taps to optimize system voltage.
- The PJM dispatcher requests the Transmission Owners to reset desired voltage on Static Var Compensators (SVCs).
- If the above is not sufficient, high-voltage problems may possibly be relieved by opening a 500 kV circuit. (Opening a circuit loaded below surge impedance loading, 850 MW, results in a net decrease in line charging). If using the EMS real-time program, the PJM dispatcher determines that opening the 500 kV circuit causes no overloads, the PJM dispatcher directs the Transmission Owner to open this line at both terminals. PJM dispatcher

determines if this action has produced the desired effect; if not, PJM dispatcher directs the Transmission Owner to reclose the line. PJM operations planning staff routinely provide the PJM dispatcher with a list of 500 kV circuits that may be opened without degrading system reliability. PJM dispatcher may not open more than one 500 kV circuit for voltage control in an area.

PJM Member Actions

- The Generation Owner/Transmission Owner dispatchers respond promptly to specific requests and directions of the PJM dispatcher.

5.4 Thermal Overloaded Transmission

This section describes the actions to be taken when there is thermal overloading of a transmission facility (line or transformer) at or above the Short-Term Emergency (STE) rating. These actions provide protection of high voltage transmission from failure and damage due to overloaded conditions and preservation of system reliability.

The general procedure is to first apply effective corrective actions that can be taken at little or no cost, for example:

- Transformer tap adjustments
- Phase-angle regulator adjustments
- Capacitor/reactor switching
- Pre-studied line switching
- Curtailment of non-firm transactions not willing to pay for congestion

5.4.1 Transaction Curtailment

PJM may curtail transactions for which the transmission customer has not indicated the desire to buy through congestion. These curtailments are accomplished in an order based on:

- Distribution factor impact on the constrained facility
- Priority of transmission service
- Timestamp of the transmission service request within each priority level

If the transactions that require curtailment are external to PJM, the NERC TLR procedure is invoked.

5.4.2 Generation Redispatch

In the event that further corrective actions are required, the outputs of effective generators are adjusted away (off-cost) from their normal assignments (on-cost).

The generation control cost signal that is sent from PJM to each Generation Owner is established either automatically by computer program or manually by a PJM dispatcher ~~(see the Resource Dispatching Exhibit of this manual)~~.

5.4.3 Operating Mode Change Procedure

The following procedures are applied when the PJM RTO conditions require a change in on/off-cost operating modes:

- From On-Cost to Off-Cost — When generation redispatch is necessary, the PJM dispatcher notifies and coordinates with the applicable Transmission Owner(s). If PJM initiates off cost for an IROL interface, all Generation Owners/Transmission Owners/LSEs are notified, via the PJM ALL-CALL, that particular Control Zones will be operating off-cost.
- From Off-Cost to On-Cost — When conditions permit the PJM dispatcher notifies and coordinates with the applicable Transmission Owner (s) that the off cost is being ended. If PJM ends off cost operations for a IROL interface, the Generation Owners/Transmission Owners/LSE are notified via the PJM ALL-CALL.

A summary of PJM Constraint Control guidelines is included as Attachment B.

PJM Actions

- When a transmission facility is loaded above the STE rating, but does not exceed the load dump rating (generally 115 percent of the STE rating), the PJM dispatcher requests adjustments to controllable equipment within a maximum of 15 minutes, to bring the loading to equal to or below the STE rating.
- If the facility is not reduced within 15 minutes, the PJM dispatcher orders a load dump to reduce the actual flow on the facility to be equal to or below the STE rating.
- When a transmission facility is loaded above the load dump rating, the PJM dispatcher or Transmission Owner on the receiving end of the overloaded facility, has up to a maximum of five minutes to analyze and relieve the overload. If not reduced to equal to or below the STE rating at the end of five minutes, the PJM dispatcher orders a load dump to relieve the facility.
- The PJM dispatcher promptly informs the Transmission Owner dispatcher of any overloads that have occurred and corrective actions being taken.

PJM Member Actions

- The Transmission Owner dispatchers promptly inform the PJM dispatcher of any overloads that have occurred and corrective actions being taken.
- The Transmission Owner dispatchers do not open any overloaded transmission, including inter-balancing area and intra-balancing area circuits, under disturbance conditions unless pre-studied or pre-arranged for specific contingencies.

If an overloaded transformer or cable cannot be relieved by applying the previous criteria, the LCC dispatcher can open the facility, while taking into account the system conditions and the resulting consequences, versus the consequences of having the facility fail and incur damage.

5.4.4 Generation Redispatch (Non-Market Facilities)

In the event that further corrective actions are required beyond non-cost actions, PJM will issue a Non Market Post-Contingency Local Load Relief Warning (PCLLRW).

At the request of the Transmission Owner, PJM will manually direct the redispatch of effective generation. The effective generation will be cost-capped but not permitted to set LMP since the facility is not a “Market” facility. PJM will commit effective generation in order to minimize the total megawatts committed to control the constraint.

Note:
If post-contingency flows exceed the facility’s Load Dump limit, the Transmission Owner’s option to control will no longer apply. PJM will manually direct the re-dispatch of effective generation to maintain the post-contingency flow below the Load Dump limit.

5.5 Stability Limited Generation

This section provides guidelines for controlling generator Stability Limits (as defined in Manual 03, section 3). The PJM RTO establishes Stability Limits for preventing electrical separation of a generating unit(s). In general, stability is not a limiting constraint on the PJM RTO. (See manual 03, Transmission Operations)

PJM Actions

- When stability issues are identified, PJM will confirm/calculate the stability limitation and communicate the limit value(s) as a stability limit, including the effective timeframe for same, to the impacted PJM generation owner(s).This includes any changes, including cancellation, around a given stability limit. For real power (MW) stability limits, limits will be translated into a corresponding generator output constraint (in MW) for a generator whereby the generator output constraints shall be respected.

PJM Member Actions

- Generator Owners respond promptly to specific requests and directions of the PJM dispatcher. Generators honor dispatch basepoints based on stability limitations and follow PJM dispatch.

Attachment A: PJM Instantaneous Reserve Check

IRC – Definitions of Terms/Calculations

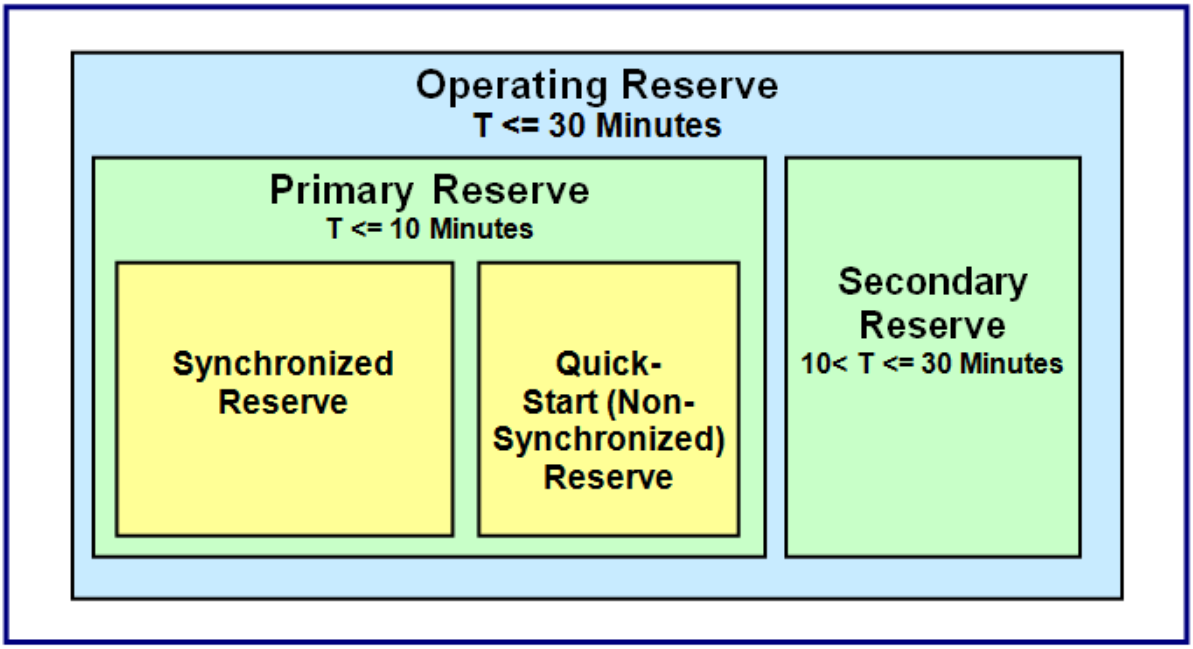

Exhibit 11: PJM Instantaneous Reserve Check Terms and Relationships

Type of Reserve	*Description/Calculation*
Synchronized Reserve	**Generation available within 10 minutes for Online Reserve Units** **1. The Synchronized Reserve is calculated as follows:** • **Synchronous Reserve = the lesser of:** **(a) DGP Adjusted Spin Ramp Rate * 10 min** **(b) Lesser of Spin Max or Eco Max – Current MW Level**
Quick- Start Reserve	**Non-Synchronized Generation available within 10 minutes for Offline Reserve Units** • **Quick- Start Reserve) = Spin Max (if none exists then Economic Max is used) (limited by ramp rate * (10 minutes - TTS))** **Include: Offline Reserve Units that have a (Notification Time + TTS) ≤ 10 min** **Note: TTS = Time to Start**
Primary Reserve	**Synchronized Reserve + Quick-Start Reserve**
Operating Reserve	**Generation available within 30 minutes for Online or Offline Reserve Units** • **Operating Reserve = Offline + Online** • **Offline is calculated as follows:** ○ **Offline = Spin Max (if none exists then Economic Max is used) (limited by Spin Ramp Rate * (30 minutes - TTS))** ○ **Include: Offline Reserve Units that have a (Notification Time + TTS) ≤ 30 min. (limited by Spin Ramp Rate * 30 minutes - TTS)** • **Online is calculated as follows:** ○ **Online = the lesser of:** **a) DGP Adjusted ramp rate * 30 min** **b) Spin Max (if none exists then Economic Max is used) – Current MW Level** **Note: Regulating Units are permitted to be included in the operating reserve calculation.** **Note: If a Maximum Emergency Alert is issued, and Maximum Emergency is called into the capacity, Emergency Maximum should be used in place of Spin Max or Economic Maximum.**
Secondary Reserve	**Operating Reserve - Primary Reserve**

Exhibit 12: Definitions of PJM Instantaneous Reserve Check Terms

Note:
Reserve quantities must reflect current regulation assignments.

IRC Company Data

Company: Electric Company
Request ID: 3047
User Name:

Request Timestamp: 07/22/2015 13:24
Date Updated: 07/22/2015 13:26
Posted Timestamp: 08/20/2015 08:27

PJM RTO & Reserve Pool Totals

Reserve Category	RTO	RTO Req.	MAD	MAD Req.
Operating Reserve	* 9346		3198	
PRIMARY Reserve	* 3387	2025	1366	1923
SYNCHRONIZED Reserve	* 2297	1350	927	1282
Additional Reserve Info	**RTO**	**RTO Req.**	**MAD**	**MAD Req.**
Largest Contingency	1350		1282	
Adjusted Primary Reserve	* 2748		1229	
Adjusted Synchronized Reserve(ASR)	* 1724		849	

Company Totals

Time Range	Reserve Category	PJMCZ	CE_OLD	RTO Total
0m-30m	**OPERATING Reserve**	* 645	0	* 645
0m-10m	PRIMARY Reserve	* 350	0	* 350
	SYNCHRONIZED Reserve	* 130	0	* 130
	Non-synchronized Reserve (Quick Start)	* 220	0	* 220
	-- NSR Hydro	190	0	190
	-- NSR Other	* 30	0	* 30
10m-30m	Secondary Reserve	* 295	0	* 295
30m-180m	Beyond Secondary	* 365	0	* 365

Notes to PJM Operator (500 char. max.)

This is a test note.

Apply Sort | Refresh | Back | Help

Note: Regulation assignments should not be included in the Synchronized Reserves unless the reserve is beyond the regulation bandwidth.
**Please see the Help button for an explanation.
All numbers on this form have been rounded for display.

IRC Company Unit Data

If you do not wish to acknowledge any unit, please uncheck the acknowledge check box prior to clicking Recalc/Submit.

1

Unit Name	ACAP	Unit Type	Zone	Eco Max	Real-Time MW	Regulating	Synchronized Reserves		Quick Start NSR		Secondary		Beyond Secondary		Acknowledge
GENERATOR 1	321	Steam	PJMCZ	0	296	0	4	20	0		0		0		☑
GENERATOR 2	378	Steam	PJMCZ	0	335	0	10		0	30	13		0		☑
GENERATOR 3	735	Steam	PJMCZ	0	660	0	0		0		0	40	0		☑
CT UNIT 1	8	CT	PJMCZ	0	0	0	0		0		0		0	50	☑
CT UNIT 2	14	CT	PJMCZ	0	0	0	0		0		14		0		☑
CT UNIT 3	56	CT	PJMCZ	0	0	0	0		0		27		0		☑
HYDRO UNIT 1**	10	Hydro	PJMCZ	0	0	0	0		0		0		0		☑

Exhibit 13: Sample Completed Instantaneous Reserve Check Company Unit Data

IRC Form Data Entry Guide

1. Reserve data pre-populated from PJM Markets and EMS systems on a Unit by Unit basis.
2. The user has the option to acknowledge reserve values for all units or on a per unit basis.
3. Any changes that actually impact IRC values should be submitted via eDART or Markets Gateway, as applicable.

Attachment B: Transmission Constraint Control Guidelines

B.1 Non-Cost Measures

PJM dispatch utilizes all available non-cost measures prior to generation re-dispatch. Non-cost measures include, but are not limited to:

- Phase Angle Regulator (PAR) adjustments
- Transformer tap adjustments
- Mega Volt Amperes Reactive (MVAR) adjustments
- Switching capacitors /reactors in/out of service
- Switching transmission facilities in/out of service.
- Curtailing transactions “Not-Willing-to-Pay” congestion

Once non-cost measures are exhausted, PJM Dispatch begins to re-dispatch generation. PJM will initiate re-dispatch on a cost-effective basis using the PJM RT-SCED solution. During constrained operations, PJM dispatch will redispatch all generation, including wind or solar, in a consistent manner. PJM assumes that, because of the intermittent nature of wind or solar, these facilities will be at Economic Maximum and that further upward dispatch (increase in output) is not available for constraint control. This curtailment can be achieved by adjusting controls or taking equipment pitching blades or taking individual turbines off-line. Once off-cost operations are activated, the PJM dispatcher will set a desired “threshold” for each individual constraint, which directs the RT-SCED solution to control to the threshold percentage of the appropriate facility rating. Subsequent RT-SCED cases will continue to control to this percentage, usually 95–100 percent of facility rating, until the threshold is changed or constraint closed by the PJM dispatcher.

B.2 Generation Re-dispatch

PJM, prior to initiating re-dispatch, reviews available controlling actions and the distribution factor effect on the overloaded facility. PJM also considers whether there are sufficient resources available to control transmission facilities within acceptable limits.

1. **Contingency Operations:** PJM will initiate off-cost operations if reasonable controlling actions are available with an impact effect generally greater than 5 percent. Once off-cost is initiated, RT-SCED tools will re-dispatch generation based on the dollar-per-megawatt effect, considering all online flexible units with an impact of greater than zero percent unless a specific impact threshold is defined for the off-cost action. PJM staff has the ability to adjust the control percentage on an individual constraint basis. PJM will initiate a Post Contingency Local Load Relief Warning/Action if post-contingency flows exceed designated ratings and insufficient resources are available to control the overloaded facilities.
2. **Normal/Actual Overload:** In general, PJM initiates off-cost and utilizes controlling actions greater than 5 percent impact; however, since an actual overload causes real-time equipment degradation on the affected facility, PJM will load generation with an impact effect of less than 5 percent. Once off-cost is initiated, the RT-SCED tool will re-dispatch generation based on the dollar-per-megawatt effect. PJM staff has the ability to adjust the control percentage on an individual constraint basis.

The RT-SCED software continues to monitor projected flows on constrained facilities and sends ramp-limited set points to optimize re-dispatch for constraint control to the designated threshold. The eligibility of resources to set the Locational Marginal Price is determined in the Locational Price Calculator "LPC" from the set of pool scheduled online dispatchable resources. Please reference Manual 11, Section 2.7 for more details about the Locational Pricing Calculator

Note:
1: In order to ensure resources do not force emergency procedures, they must be dispatchable (Dispatchable Generation) in the range between the greater of the resource's physical minimum operating level or Capacity Interconnection Rights (CIR) and Maximum Facility Output (MFO) (i.e., the fixed generation flag must not be selected).

2: Resources may not submit an Economic Minimum that exceeds the greater of the resource's physical minimum operating level or the level of their Capacity Interconnection Rights (CIR) in the real-time energy market. This restriction does not apply to the day-ahead market.

3: An Intermittent or Hybrid Resource's Economic Minimum shall represent the lowest operating MW point of the resource.

4: An intermittent or Hybrid Resource comprised exclusively of solar, wind, and/or battery components should set its emergency minimum to 0. A Hybrid Resource with a non-inverter component must set emergency min at or below the Economic Minimum of the non-inverter component.

5: The output of a Hybrid Resource should achieve its dispatch point within 5 minutes or consistent with the resource's ramp rate bid. PJM should be notified if the response time is expected to exceed 5 minutes

6: The operator of a Hybrid Resource with a battery component that is dispatchable must indicate to PJM the hours for which the plant is operating in "Generation" mode, during which time the battery is not providing power for the purpose of maintaining hybrid output consistent with PJM dispatch. Dispatchable Hybrid Resources must follow dispatch in all hybrid operational modes.

7: During Constrained Operations, resources will be re-dispatched cost effectively based on their bid parameters.

8: The cost-effective re-dispatch ($/MW effect) objective is to minimize the function [(Current Dispatch Rate – Unit Bid) ÷ Unit Generation Shift Factor)].

9: The unit default cost/price bid will be assumed to be 0 unless provided via Markets Gateway.

10: Intermittent resource curtailment should be achieved within 15 minutes or consistent with the resources ramp rate bid. PJM should be notified if curtailment is expected to exceed 15 minutes.

PJM Member Actions

- Generation dispatchers ensure their units are following PJM economic base points to Economic Minimum output.
- Wind or Solar Generator Operators will adjust Control Systems or manually adjust resource output to achieve the desired RT-SCED basepoint.

B.3 Analyzing and Controlling Non-Market BES Facilities

Background:

PJM is responsible for monitoring Bulk Electric System (BES) facilities, defined as:

- All 100 kV and above non-radial transmission lines
- All non-radial transformers with a high-side voltage of 100 kV and above
- Individual generation resources larger than 20 MVA or a generation plant with aggregate capacity greater than 75 MVA that is connected via a step-up transformer to facilities operated at voltages of 100 kV or higher
- Lines operated at voltages of 100 kV or higher
- Transformers (other than generator step-up) with both primary and secondary windings of 100 kV or higher
- Associated auxiliary and protection and control system equipment that could automatically trip a BES facility, independent of the protection and control equipment's voltage level

A portion of the BES facilities are considered non-market BES facilities and will be controlled in a manner different than market BES facilities. **Controlling actions for non-market BES facilities will be coordinated with the Transmission Owner and will not be permitted to set LMP**.

Procedure:

B.3.1 Outage Approval Process for BES Facilities

Reliability Engineers will evaluate and approve transmission outages consistent with the PJM Manual 03, Transmission Operations, and PJM Manual 38, Operations Planning, ensuring reliability is maintained on all BES facilities.

B.3.2 Outage Approval Process for Non-Market BES Facilities

Additional coordination may be required with the Transmission Owner (TO) for non-market BES facilities to ensure contingency results are consistent in real-time operations:

- For planned outages, the differences in contingency analysis results should be rationalized in advance and instruction provided to real-time operations as to which EMS analysis is more accurate (PJM or TO).

- An operating plan shall be agreed upon in advance, which may require the advanced scheduling of long-lead-time generation at the expense of the Transmission Owner.
- The agreed upon controlling actions should be documented and communicated to PJM and TO or Generation Owner (GO) dispatchers.
- Under certain conditions, a generator may violate Generator Step-up Transformer (GSU) limits upon the loss of another facility. A generator will be permitted to operate above their emergency limits so long as a post-contingency reduction plan has been agreed upon. Pre-contingency reductions would be required in the absence of an agreed-upon plan.

B.3.3 Resolving Modeling Differences

Prior to implementing controlling actions to control flows within limit criteria, PJM dispatch compares PJM EMS Security Analysis results with Transmission Owners' EMS Security Analysis results. Pre-contingency and post-contingency flows and ratings are compared. If a difference exists between PJM and Transmission Owner Security Analysis results, PJM will operate to the most conservative results until the difference can be rationalized. For planned outages, the differences should be rationalized in advance and instruction provided to real-time operations. For situations where differences were not resolved in advance, and if the difference is significant, the following guides will be followed to quickly resolve the difference:

- PJM and Transmission Owner identify modeling issue and operate to the most conservative solution.
- PJM investigates modeling issue and attempts to resolve within one hour. This may involve verification of distribution factors using Seasonal PSS/E load flow case.
- If a discrepancy is greater than 5 percent and expected to last two hours, PJM Dispatch will contact PJM support staff and request Transmission Owner to contact support staff.
- PJM and Transmission Owner on-call support staff will work toward resolving modeling difference.
- PJM and Transmission Owner agree to defer to the most accurate analysis in lieu of operating to the most conservative results, when the difference is understood or resolved.
- PJM and Transmission Owner support staff attempt to correct modeling differences within 24 hours.

B.3.4 Real-Time Controlling Actions

Real-time controlling actions for non-market BES facilities are prioritized as follows:

1. Non-cost measures, including:
    a. PAR adjustments
    b. Transformer tap adjustments
    c. MVAR adjustments
    d. Switching capacitors/reactors in/out of service
    e. Switching transmission facilities in/out-of-service
    f. Curtailing transactions “Not-Willing-to-Pay” congestion
2. In order to control post-contingency voltage or thermal violations, PJM will manually direct the re-dispatch of effective generation at the request of the Transmission Owner. The effective generation will be offer-capped, but not permitted to set LMP since the facility is not a Market facility. PJM will commit effective generation in order to minimize the total megawatts committed to control the constraint.
3. Under certain conditions, a generator may violate GSU limits upon the loss of another facility. A generator will be permitted to operate above their emergency limits so long as a post-contingency reduction plan has been agreed upon. Pre-contingency reductions are required in the absence of an agreed-upon plan.
4. PJM will direct pre-contingency re-dispatch actions to:
    a. Control for actual voltage violations below normal low limits
    b. Control for actual thermal overloads in violation of normal ratings
    c. Control for post-contingency voltage violations below Load Dump low limits
    d. Control for post-contingency thermal overloads in violation of Load Dump limits
    e. Control for post-contingency violations resulting in non-converged contingencies
5. PJM will issue a non-market PCLLRW for a thermal contingency violation and provide post-contingency load distribution factors if the post-contingency flow exceeds the LTE rating.
6. PJM will issue a non-market PCLLRW for a voltage contingency violation and provide post-contingency load distribution factors if the post-contingency voltage is below the emergency limit.

B.3.5 Maintaining System Reliability

PJM is required to ensure system reliability is maintained, ensuring there is an operating plan for all BES facilities. If PJM or a TO analysis indicates that a planned facility outage would result in non-converged contingencies, post-contingency voltages below Load Dump voltage limits, post-contingency voltage drop violations, actual voltages below normal limits or actual flows in excess of normal ratings after all non-cost measures are exhausted, the TO will be required to schedule generation or cancel their planned outage.

Facilities in the posted information can be designated:

- “Unmonitored” or “Not Monitored,” which applies to facilities that may, or may not, be modeled in the PJM EMS. No significant impact on system loading is expected to result from outages on these facilities. PJM’s EMS does not maintain ratings/limits for these facilities.
- “PJM Market,” which indicates that the facility is internal to PJM and is under congestion management. If actual or post-contingency violations occur on these facilities, operators follow appropriate procedures including market re-dispatch to remediate problems. PJM’s EMS maintains ratings/limits for these facilities.
- “PJM Reliability,” which indicates that the facility is monitored by PJM for NERC Security/ Reliability Coordinator obligations. This designation is also applied when coordination is required to ensure that facilities which may not be in the PJM Market are not adversely impacted by switching or phase shifter operations on parallel PJM facilities that are under congestion management. If actual or calculated overloads occur, operators follow appropriate procedures – excluding market re-dispatch – to remediate the problem. PJM’s EMS maintains ratings/limits for these facilities.
- “PJM Status,” which indicates that TOs are required to report, schedule and coordinate outages on the facility. All facilities classified as 1-PJM Market and 2-PJM Reliability Coordination are automatically included as Outage Reportables. TOs are also required to report outages on facilities which may not be in congestion management, but may impact the reliability and/or economics of the system. TOs are required to follow applicable outage reporting procedures for facilities classified as “Reportable High/Yes” and “Reportable Low.” The primary difference in these classifications is that for Reportable High/Yes facilities, TOs are required to call before and after taking outages, whereas TOs are not required to call PJM before taking an outage on Reportable Low facilities. TOs are not required to report outages on facilities classified as Reportable No to PJM. PJM can require that any, or all, OATT facilities be Outage Reportable. PJM’s EMS does not maintain ratings/limits for these facilities.

Attachment C: PJM Black Start Test Report Form

The following forms are located on the PJM Black Start Ancillary Services link on the PJM website, found under the Markets & Operations tab > Ancillary Services > Black Start Service Test & Cost Submittal Forms:

- PJM Black Start Test Form
- PJM Black Start Formulaic Cost Data Form
- Data Secure File Upload Instructions

Links can be found at:

Black Start Test Report Form: http://pjm.com/~/media/markets-ops/ancillary/black-start-test-report-forms.ashx

Black Start Formulaic Cost Data Form: http://www.pjm.com/~/media/markets-ops/ancillary/black-start-cost-submittal-forms.ashx

Attachment D: Disturbance Control Performance/Standard

The purpose of the NERC Standard BAL-002-3, Disturbance Control Standard - Contingency Reserve for Recovery from a Balancing Contingency Event, is to ensure that PJM, a Balancing Authority, is able to utilize its contingency reserve to balance resources and demand, and to return Interconnection frequency to within defined limits following a Reportable Disturbance. NERC defines a Reportable Disturbance as any event that causes an ACE change greater than or equal to 80 percent of a Balancing Authority's or reserve sharing group's most severe contingency. Because generator failures are far more common than significant losses of load and because contingency reserve activation does not typically apply to the loss of load, the application of Disturbance Control Standard (DCS) is limited to the loss of supply and does not apply to the loss of load.

As such, PJM is required to have access to or operate with resource reserves to respond to disturbances. This reserve may be supplied from generation, controllable load or coordinated adjustments to interchange schedules. Further discussion of the various types of operating reserve is made in PJM Manual 10, Pre-Scheduling Operations, section 3, Reserve Requirements. As a minimum, this reserve must be sufficient to cover the most severe single contingency, and this contingency value must be re-evaluated on an annual basis to determine the most severe single contingency.

The DCS Standard requires PJM to satisfy disturbance recovery criterion within a certain disturbance recovery period for 100 percent of Reportable Disturbances. That criterion requires PJM to return its Area Control Error (ACE) to zero if its ACE just prior to the Reportable Disturbance was positive or equal to zero. For negative initial ACE values just prior to the Disturbance, a return of ACE is made to its pre-Disturbance value. In either case, the disturbance recovery period is 15 minutes after the start of a Reportable Disturbance. Subsequently, PJM must fully restore the Synchronized Reserve within 90 minutes. All contingency losses (i.e., Disturbances) lesser of 900 MW in the Eastern Interconnection or 80 percent of the Most Severe Single Contingency must be calculated and reported as follows.

For loss of generation:

If ACE_A <0, then

$$R_i = \frac{MW_{Loss} - \max(0, ACE_A - ACE_M)}{MW_{Loss}} * 100\%$$

If ACE_A <0, then

$$R_i = \frac{MW_{Loss} - \max(0, -ACE_M)}{MW_{Loss}} * 100\%$$

where:

MW_{Loss} is the MW size of the Disturbance as measured at the beginning of the loss,

ACE_A is the pre-disturbance ACE, and

ACE_M is the maximum algebraic value of ACE measured within 15 minutes following the Disturbance. (Note: ACE_M may be set to equal ACE15 min).

The recording of the MW_{Loss} value should be measured at the site of the loss to the extent possible. This value should not be measured as a change in ACE since governor response (and AGC response) may introduce error.

The value for ACE_A shall be based on the average ACE over the period just prior to the start of the Disturbance (10 and 60 seconds prior and including at least four scans of ACE).

The average percent recovery is the arithmetic average of all the calculated R_i values for Reportable Disturbances during a given quarter. Average percent recovery is similarly calculated for excludable Disturbances.

These Disturbances are reported to NERC on a quarterly basis. Additionally, it is important to note that multiple contingencies occurring within one minute or less of each other are treated as a single contingency. However, if the combined magnitude of the multiple contingencies exceeds the most severe single contingency, the loss shall be reported, but excluded from the compliance evaluation (as described above). Additional contingencies that occur after one minute of the start of a Reportable Disturbance but end prior to the end of the disturbance recovery period can be excluded from evaluation as well. Instead, PJM can determine the DCS compliance of the initial Reportable Disturbance by performing a reasonable estimation of the response that would have occurred had the second and subsequent contingencies not occurred.

Attachment E: PJM Reporting of NERC BAL Standard

E.1 Daily Data Support for BAL-001,BAL-002, BAL-003, and BAL-005, Reporting

Data Storage

The PJM data archive stores the following data to support Compliance Monitoring:

- PJM RTO Area Control Error (ACE) instantaneous (scan rate no less than four second scan)
- PJM RTO Reporting Area Control Error (RACE) instantaneous (scan rate no less than four second scan)
- PJM RTO system frequency instantaneous sampled at two second rate
- PJM RTO scheduled frequency as set in the PJM EMS control system
- PJM Net Actual Interchange sampled at scan rate for ACE development
- PJM RTO Net Schedule Interchange sampled at scan rate for ACE development
- PJM RTO BAAL minute high limit and minute low limit
- PJM RTO BAAL minute BA ACE-frequency
- PJM RTO BAAL exceedance minutes

Note that exceedance time for a BAAL exceedance event is a progressive number of minutes that is reset only when the BA's ACE-Frequency value is not outside the BAAL high limit and low limit.

PJM calculates clock-minute averages of the instantaneous data and stores the one minute averages for the following:

- ACE (one minute)
- Frequency (one minute)
- CF(compliance factor)

E.2 PJM Frequency Bias

Frequency Bias Setting

PJM uses the method described by NERC Standard BAL-003-2 R2, Frequency Response and Frequency Bias Setting, Requirements, and outlined in NERC Standard BAL-003-2 Attachment A, to develop the annual Frequency Bias Setting.

PJM will set its Frequency Bias Setting to the greater of (in absolute value) any number between 100 percent and 125 percent of PJM's frequency response measure, calculated on FRS Form 1, or PJM's pro-rate share of the interconnection minimum as determined by the ERO.

PJM Bias Review

Using Eastern Interconnection frequency events selected and distributed by NERC, PJM reviews its Frequency Bias Setting and submits it to NERC by the due date of each year and re-calculates its setting to reflect any change in the frequency response of the Balancing Authority Area. PJM will update the Frequency Bias Setting on April 1 of each year, or as directed by NERC.

PJM Performance Compliance Department Review

Daily review of ACE inputs is performed by PJM's Performance Compliance Department to document any missing or invalid data quality values of ACE or frequency for final determination of CPS and Balancing Authority Area Control Error Limit (BAAL) reporting values.

PJM calculates, via reports, many variations of the minute data to obtain Control Performance Standard (CPS) average values and running balances and BAAL as well as PJM corporate goals related to the BAAL standards.

Quarterly Disturbance Control Standard (DCS) reporting (January, April, July, and October for the previous quarter). The following data is reported voluntarily to the NERC Resources Subcommittee (RS)

- Number of Reportable Balancing Contingency Events (RBCE)
- Number of RBCEs recovered
- Number of RBCEs greater than its Most Severe Single Contingency (MSSC)
- Number of RBCEs greater than its MSSC recovered
- Number of RBCEs with an extended Contingency Event Recovery Period
- Number of RBCEs with an extended Contingency Event Recovery Period recovered
- Maximum extension of the Contingency Event Recovery Period
- Number of RBCEs with an extended Contingency Reserve Restoration Period
- Number of RBCEs with an extended Contingency Reserve Restoration Period recovered
- Maximum extension of the Contingency Reserve Restoration Period

Attachment F: Dynamic Transfers

F.1 Background

The NERC Glossary of Terms defines a Dynamic Transfer[1] [i] as "The provision of the real-time monitoring, telemetering, computer software, hardware, communications, engineering, energy accounting (including inadvertent interchange) and administration required to electronically move all or a portion of the real energy services associated with a generator or load out of one Balancing Authority Area into another." Dynamic Transfers includes both Dynamic Schedules and Pseudo-Ties, which are further defined below.

The NERC Glossary of Terms defines a Dynamic Interchange Schedule or Dynamic Schedule [i] as: "A time-varying energy transfer that is updated in real-time and included in the Scheduled Net Interchange (NIS) term in the same manner as an Interchange Schedule in the affected Balancing Authorities' control ACE equations (or alternate control processes)."

The NERC Glossary of Terms defines a Pseudo-Tie [i] as: "A time-varying energy transfer that is updated in real-time and included in the Actual Net Interchange term (NIA) in the same manner as a Tie Line in the affected Balancing Authorities' control ACE equations (or alternate control processes)."

The major difference between a Dynamic Schedule and a Pseudo-Tie is how they are incorporated within a Balancing Authority's ACE calculation. A Dynamic Schedule is modeled as an "Interchange Schedule" and therefore is subject to NERC tagging requirements [iv][v][ix]. A Pseudo-Tie, modeled as a "virtual" tie, is accounted as actual interchange and requires an adequate level of modeling within the PJM Energy Management System (EMS) and Markets Gateway. A pseudo-tied resource is considered within the Attaining Balancing Authority [i] metered boundary. In contrast, a dynamically scheduled resource continues to be within the Native Balancing Authority [i] metered boundary while providing services in the Attaining Balancing Authority.

Pseudo-Ties must register with the North American Energy Standards Board (NAESB) to assist with inter-regional congestion management and are still subject to the NERC tagging requirements unless the information about the Pseudo-Tie is included in congestion

[1] All capitalized terms that are not otherwise defined herein or in the NERC glossary of terms shall have the same meaning as they are defined in the PJM Open Access Transmission Tariff (Tariff), Amended and Restated Operating Agreement of PJM Interconnection, L.L.C. (Operating Agreement), the Reliability Assurance Agreement Among Load Serving Entities in the PJM Region, or the PJM Manuals.

management procedure(s) via an alternate method. Typically, Pseudo-Ties are not tagged since they are incorporated into congestion management procedures.

F.2 Dynamic Transfer Request Process Flow

Purpose

This section offers additional details to the process flow pertaining to requesting a Dynamic Transfer. All process flow documentation was written based on an optimal situation and could vary per request. The information listed below is intended to provide more insight as to how Dynamic Transfer requests are processed.

Submitting Requests

All requests must be complete to move forward in the process. The request form can be found at the following link: Dynamic Transfer Form. PJM may request any additional information essential to properly process the request. PJM will inform submitter once PJM considers the request to be complete. Please note, PJM will not consider a request complete until the submitter has formally notified the Native Balancing Authority of the request to Pseudo-Tie and provided PJM with evidence of such notification. Additionally, a request should not be made until the resource exists in the Native Balancing Authority's planning queue.

Administrative Fee

Once a Pseudo-Tie request is considered complete by PJM, the submitter will be required to execute a System Modification Cost Reimbursement Agreement. Additionally, with the execution of the agreement, the submitter must provide PJM with the administration fee as described before the process can move forward.

Pseudo-Tie Approval Process

All generator Pseudo-Tie requests, once the administrative fee is received by PJM, must go through the Pseudo-Tie Approval Process. The process consists of planning, modeling and markets eligibility tests and criteria. As each criterion is evaluated, PJM will inform the submitter of the results. All eligibility requirements must be met in order for the request to be approved. Each criterion is described in detail below.

Planning Eligibility Criteria

PJM has established a process in which the study of generation seeking to pseudo-tie to PJM requires the review of the transmission planning studies, for that portion of the study conducted outside of the PJM footprint, as well as providing assistance to the entity seeking to pseudo-tie that generation in the event that the transmission planning studies are not approved as sufficient. The review of these studies conducted outside of PJM's footprint, by PJM, will allow PJM to determine if the studies performed will meet, are similar to, or exceed the requirements associated with the studies of generation seeking to connect to the PJM footprint.

The requirement to review these studies conducted outside of the PJM footprint allows PJM to determine if that generation seeking to pseudo-tie to PJM is similar in its deliverability, when comparing to the generation directly connected to the PJM footprint, as it relates to the criteria used to test the system and the extent to which the system is reinforced for the deliverability of that generation and the system surrounding that generation.

The initial study of generation inside the PJM footprint is conducted under procedures as outlined in PJM Manual 14H, New Services Request Cycle Process, under the Phase I and Phase II System Impact Study requirements of sections 4.3 and 4.5, as well as the general study procedures as outlined in Attachment C and Attachment G of PJM Manual 14B, PJM Region Transmission Planning Process. Ongoing study requirements for the study of generation in the PJM footprint must be maintained under these same standards as is conducted in the annual RTEP studies.

Any entity seeking to pseudo-tie a generation resource to PJM may consult with PJM to review the criteria to be utilized in the transmission planning studies which may be performed, by entities outside of PJM during the conduct of required transmission service studies, in order to allow PJM to provide comment as to the potential need for additional study beyond those transmission service studies. In order to allow PJM to conduct this evaluation, the entity seeking to pseudo-tie to PJM shall provide to PJM the criteria requirements used to both study the individual generation to be pseudo-tied to, as well as provide the criteria which shall be used on an on-going basis to study the system surrounding that generation. This will allow PJM to evaluate both the current process for study as well as the process that may be used to continue to ensure the system is reinforced appropriately.

Alternately, if the transmission service studies have already been completed, the entity seeking to pseudo-tie to PJM may provide the study reports which documented the studies performed to grant the transmission service on those systems outside of PJM. PJM will review these studies to determine if other studies are required in order to allow certification of that initial study. This review will ensure that the study criterion used meets, is similar to, or exceeds the requirements associated with the studies of generation seeking to connect to the PJM footprint. The entity seeking to pseudo-tie to PJM must also provide the criteria which shall be used on an on-going basis to study the system surrounding that generation.

If the studies conducted, or that will be conducted, to allow the external Transmission Service Providers/Balancing Authority to grant transmission service to the entity seeking to pseudo-tie to PJM, as well as the studies conducted to examine the system surrounding the generation on an on-going basis, meet the PJM transmission planning criteria requirements, then no additional work will be required to meet the transmission planning requirements associated with the process to pseudo-tie generation to PJM, and PJM will provide certification of this.

If the studies that were conducted, or that will be conducted, do not meet PJM criteria, then PJM shall delineate what the deficiencies are, such that if the deficiencies are alleviated, then PJM will provide certification. If the studies that were conducted, or that will be conducted, do not

meet the PJM criteria requirements, the entity seeking to pseudo-tie generation to PJM will be required to engage a consultant to perform studies to ensure that all studies, taken together, can be assured as meeting the PJM criteria requirements. PJM will not require performance of duplicate studies in the event that additional studies are to be performed by a consultant.

The entity wishing to pseudo-tie to PJM should also understand that, beyond any initial studies to verify that the generation is deliverable to PJM under the same criteria used to study existing generation internal to the PJM footprint, the entity seeking to pseudo-tie generation will be required to continue to demonstrate, on an on-going basis, that studies performed on the system surrounding the generation are conducted in a manner such that the PJM transmission planning criteria continues to be used. This will again ensure that the system capabilities are being maintained to be consistent with the system capabilities associated with the generation directly connected to PJM.

In the event that any study conducted to certify the transmission planning requirements of the systems outside of PJM's footprint identifies the need for system reinforcement through documentation of a constraint in the study, the entity seeking to pseudo-tie generation to PJM must complete upgrades as needed to eliminate any constraints identified in those studies. This will require that the entity seeking to pseudo-tie generation to PJM engages the external Transmission Service Providers/Balancing Authority to complete the required upgrades as well as demonstrate to PJM that those upgrades are completed.

PJM will allow the option to reduce the Pseudo Tie quantity to meet PJM's planning criteria in order to avoid or reduce the amount of potential transmission upgrades. In the event that the pseudo-tied quantity is reduced due to constraints outside the PJM footprint, the customer must then also reduce the Network External Designated Transmission Service (NEDTS) held in PJM, executing a new agreement, such that the megawatt quantity for both the deliverable megawatt outside PJM and the NEDTS provide the same megawatt quantity. If the customer wishes to retain the energy delivery capability of the previously held quantity associated with the NEDTS, the customer may place a new request for service on the OASIS to retain this capability as point-to-point (PTP) service.

This acquisition of PTP service in place of the NEDTS service, by the customer, will allow PJM to continue to permit the customer to exercise transmission service rights, in the form of the PTP service, for the purposes of the customer's facilities' participation in the energy market, while also recognizing that the NEDTS will allow participation in the PJM capacity market.

Note that PJM's evaluation of the external Transmission Service Providers/Balancing Authority transmission service studies are not requirements associated with any entity exercising the use of that transmission service, but are requirements associated with allowing customers to participate in the PJM capacity market.

Modeling Eligibility Criteria

In order for a requested Pseudo-Tie to be approved, the particular resource must meet the following two modeling criteria: (1) Electrical Distance Test and (2) Seams Coordination Model Consistency. Each of the aforementioned criteria is described in detail below

Electrical Distance Test

PJM staff will evaluate the feasibility of upgrading the PJM Energy Management System (EMS) model to explicitly model the pseudo-tied resource by performing an electrical distance test, from the highest connected voltage at the station the unit is inter-connected, to determine the Thevenin equivalent impedance into PJM. If determined to be feasible, meaning the resulting equivalent impedance is determined to be less than or equal to .065 plus one adjacent bus, the cost of the model upgrade will be borne by the Market Participant requesting to Pseudo-Tie.

Seams Coordination Model Consistency

The EMS Models for PJM and the external Balancing Authority Areas, where the external resource impacts may be required to coordinate flowgates, need to ensure that the models align for effective operation of the requested Pseudo-Tie. This alignment is measured by calculating shift factors of coordinated flowgates and ensuring they are within ± 2 percent of each other's models. Any deviation of more than ± 2 percent will cause the requested Pseudo-Tie to fail the 2 Percent Modeling Accuracy Test. PJM will make their best effort to align the models with the respective external entity without adding unnecessary risk to the PJM State Estimator and operational reliability.

Markets Eligibility Criteria

In order for a requested Pseudo-Tie to be approved, the particular generator must meet the following two markets criteria: (1) Market-to-Market Flowgate Test and (2) Transfer of Firm Allocation Eligibility. Each of the aforementioned criteria is described in detail below

Market-to-Market Flowgate Test

There must be at least one flexible internal PJM generator, which includes generation physically located inside of the PJM region that has the capability to have an economic minimum less than the economic maximum, with at least 1.5 percent impact on each eligible coordinated flowgate, measured with respect to the PJM RTO load, as a result of the requested Generation Pseudo-Tie.

Test Details:

1. Identify new coordinate flowgates impacted by the requested Pseudo-Tie pursuant to any interregional agreements.
2. Identify flexible internal PJM Generation.

3. Perform analysis to determine the percentage of flow impact (shift factor) for a transfer of flow from the flexible internal PJM Generation with respect to the PJM RTO load on coordinated flowgates previously identified.
4. Identify which coordinated flowgates have a flexible internal PJM generator with at least ± 1.5 percent impact.
5. If any flowgates do not have an internal PJM generator with at least ± 1.5 percent impact, the resource fails the M2M Flowgate Eligibility Test and will not be approved for implementation.

Transfer of Firm Allocation Eligibility

Firm allocations associated with coordinated flowgates applicable to the requested Pseudo-Tie must transfer to PJM from the external entities. Firm allocations mean the requested Pseudo-Tie impacts must be eligible to be included as part of PJM's firm flows in the Day-Ahead Market on all coordinated facilities applicable to the requested Pseudo-Tie.

Estimate and Deposit

Once a request has passed the Electrical Distance and Market-to-Market Flowgate requirements as described above, PJM will have 60 days to provide the submitter with an estimate of costs. The submitter will then have 60 days to review the estimate and provide PJM with notification to proceed or withdraw the request. Within 10 days of a submitter indicating the intent to proceed, the submitter must provide PJM with a deposit per the executed System Modification Cost Reimbursement Agreement.

Documentation

The following documentation, if applicable, must be submitted to PJM at least 1.5–3 years prior to the beginning of the Delivery Year.

- External Resource Officer Certification
- Pro Forma Dynamic Schedule Agreement
- Pro Forma Pseudo-Tie Agreement
- Must be executed prior to the Pseudo-Tie going into service
- Transmission Service Agreement
- Upgrade Construction Service Agreement for Execution

Withdrawals

PJM may withdraw a request for the reasons indicated below. If a request is withdrawn, PJM will provide an executed withdrawal letter to the submitter.

1. Requested resource does not pass all required eligibility criteria
2. Submitter chooses not to proceed after reviewing estimate

3. Periodically, PJM will verify the resource owner's intent regarding the requested Pseudo Tie. If PJM does not hear back within 30 days, the resource will be withdrawn. If the resource owner would like to continue, PJM will require a preferred production date from the resource owner. If PJM cannot meet the preferred production date, the first available date will be provided to the resource owner. Lastly, if the resource owner indicates the desire to terminate the Pseudo Tie Request, the resource will be withdrawn.

Note:
The information above does not supersede the PJM Tariff.

F.3 PJM EMS Modeling Requirements for Implementing Pseudo-Ties

PJM Manual 3A, Energy Management System (EMS) Model Updates and Quality Assurance (QA), summarizes the PJM model process and PJM and member obligations to create and maintain an accurate model of the electric system. An accurate model is required to analyze real-time conditions to help ensure that PJM and the neighboring transmission systems are operated safely and reliably.

PJM staff is responsible for regularly exchanging and updating models to support Joint Operating Agreements (JOAs) with neighboring systems. While external generation may not have a significant impact on PJM Transmission Facilities, their output can impact local or neighboring BA transmission facilities, which may be subject to "market-to-market" congestion management. It is for this reason that PJM is required to adequately expand our external model to support market-to-market calculations while ensuring continued State Estimator stability under normal and outage conditions.

PJM limits EMS model builds to four times per year in order to ensure a "stable" model for all stakeholders/participants. The incorporation of new Pseudo-Ties into the PJM model typically requires 12–30 months lead time depending on the location of the external resource and level of existing modeling, but can require additional lead time depending on its electrical proximity to the existing PJM RTO footprint. Please see Manual 3A, exhibit 4, PJM EMS Model Details for visual representation of the existing PJM RTO footprint. In contrast, a Dynamic Schedule may take 3–6 months lead time due to modeling not being required.

F.4 Generation Dynamic Transfer Business Rules

- All Dynamic Transfers are required to comply with applicable NERC Standards [ii][v], the PJM Tariff, the PJM Operating Agreement, PJM's Dynamic Transfer Signal requirements provided in PJM Manual 01, Control Center and Data Exchange Requirements, section 5.2.1 [vii], Tie Lines, and other applicable PJM manuals.
- Several methods exist for the Dynamic Transfer of a unit in to or out of PJM. These methods are summarized below, illustrated in the Partial Unit Dynamic Transfer Methods Exhibit and described in more detail throughout the document:

- Dynamic Transfer of the entire output of the unit.
- Dynamic Transfer of all output above/below a threshold[2] value. This option is generally used to satisfy load serving obligations where unit is physically located (i.e. Native Balancing Authority and transfer remainder of the generation output to the Attaining Balancing Authority). Dynamic Transfer of output below a threshold is a method limited to Dynamic Schedules and not available for Pseudo-Ties.
- Dynamic Transfer of a percentage[2] of the unit's full output (Installed Capacity). This option is generally used to transfer a share of a jointly owned resource from the Native Balancing Authority to the Attaining Balancing Authority. In this method, a maximum of X percent of the full unit output is dynamically transferred into the Attaining Balancing Authority.

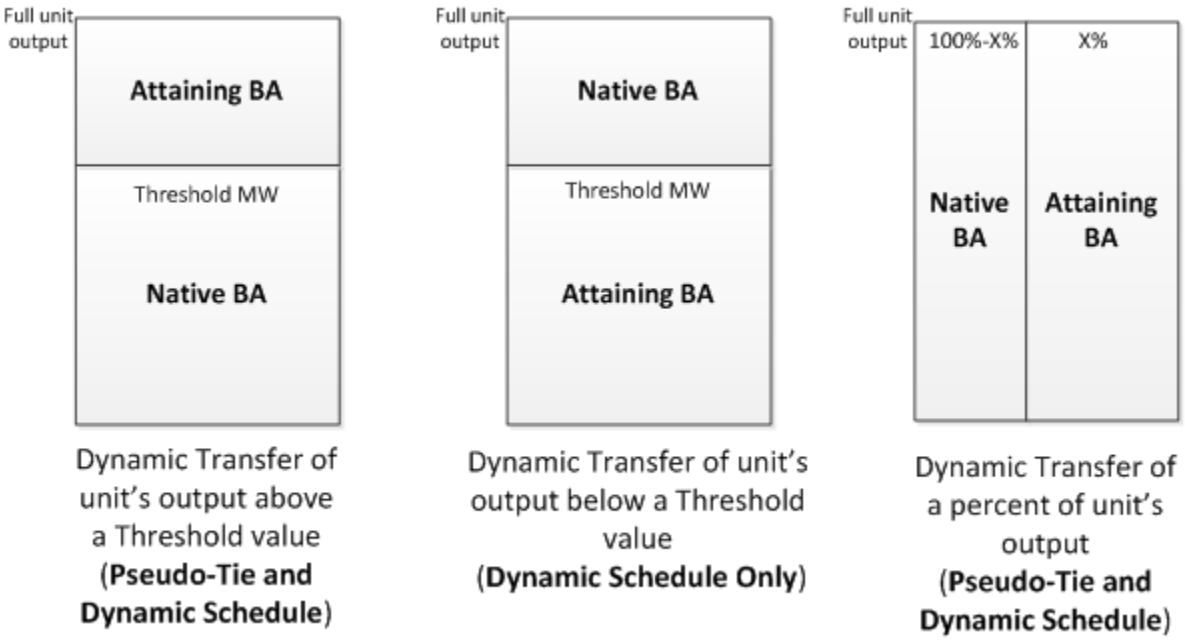

Exhibit 14: Partial Unit Dynamic Transfer Methods

- The value of the Dynamic Transfer megawatts where the entire unit's output is not transferred will be determined as follows:
  - **Case I:** Dynamic Transfer of unit's output **above** the threshold belongs to the Attaining Balancing Authority

[2] Partial unit transfers require approval and additional coordination between Balancing Authorities to manage ACE impacts. This may limit the resource's ability to provide certain market services in the Attaining BA such as: ancillary services.

        - When the unit is producing a real-time megawatt output below the threshold value, all of the output remains in the Native Balancing Authority [i], and the Dynamic Transfer megawatt associated with the Attaining Balancing Authority is zero.
        - When the unit is producing a real-time megawatt output above the threshold value, then the difference between the real-time megawatt output and the threshold value is the Dynamic Transfer megawatt into the Attaining Balancing Authority.
    - **Case II:** Dynamic Transfer of a unit's output below the threshold belongs to the Attaining Balancing Authority. This is only applicable to Dynamic Schedules and is not a viable option when implementing Pseudo-Ties.
        - When the unit is producing a real-time megawatt output below the threshold value, all real-time megawatt output remains in the Attaining Balancing Authority [i]. The Dynamic Transfer megawatt associated with the unit is its real-time megawatt output.
        - When the unit is producing a real-time megawatt output above the threshold value, then the difference between the real-time megawatt output and the threshold value belongs to the Native Balancing Authority and the Dynamic Transfer megawatt is the threshold value.
    - **Case III:** The portion of the real-time megawatt output when using a percentage option belongs to the Attaining Balancing Authority.
        - When the unit is online and producing energy, a portion of real-time megawatt output is the Dynamic Transfer megawatt transferred to the Attaining Balancing Authority while the remainder is in the Native Balancing Authority. The Dynamic Transfer megawatt cannot exceed X percent of the full unit output at any time.

Note:
The threshold or percentage value associated with a partial-unit Dynamic Transfer may be used to model individual capacity of each virtual market share of a single physical generating unit's capacity.

- For Capacity Resources (i.e., units that are committed to PJM through a Reliability Pricing Model (RPM) Auction or a Fixed Resource Requirement (FRR) Capacity Plan), the maximum Dynamic Transfer megawatt amount established by the threshold value or percentage must be greater than or equal to the RPM/FRR committed megawatt (in Installed Capacity (ICAP) terms). All Capacity Performance Resources need to be Pseudo-Tied by the start of relevant Delivery Year.
- All Capacity Resources must secure Firm Point-to-Point Transmission Service for the complete path from the unit to the border of the PJM Region and secure Network External Designated Transmission Service (NEDS) on PJM OASIS from the border of the PJM Region into the PJM transmission system [xv] up to their RPM/FRR commitments (in ICAP

terms) and use that secured Transmission Service to transfer energy into the PJM Region. In addition, any Capacity Performance Resource must obtain long-term firm transmission service with rollover rights as required in the RAA and PJM Tariff. These resources are required to offer, at a minimum, the committed installed capacity portion in the PJM Day-Ahead Energy Market. Additionally, all Capacity Resources shall provide a letter of non-recallability assuring PJM that the energy and capacity from the unit up to their RPM/FRR commitments (in ICAP terms) is not recallable to any other Balancing Authority [xv].

- Dynamically transferred Capacity Resources and Energy Resources must notify PJM of scheduled or unscheduled outages via PJM eDART [xvi], and update unit parameters accordingly via the Markets Gateway application to reflect the de-rates due to the outages. Dynamically transferred Capacity Resources and Energy Resources shall also submit outage information via PJM's eGADS application [xv].
- Units for which the entire output is dynamically transferred into PJM are eligible for Operating Reserve credits for start-up and no-load values when committed by PJM. Pseudo-tied resources need to follow PJM dispatch.
- For combined cycle units utilizing a threshold/percentage option, one threshold/percentage value will be utilized for the facility as a whole, as opposed to using one value for the combustion turbine and another for the steam turbine. The output of all parts of the combined cycle unit will be combined into one value in order to compare to the threshold/ percentage and determine the amount dynamically transferred to PJM.
- The Market Participant will be responsible for providing telemetry [vii] to include: the total unit/plant output, the threshold or percentage value and the calculated dynamically transferred amount to both Native and Attaining BAs. PJM and the Native/Attaining Balancing Authority will exchange these telemetered values to ensure consistent calculation of the Dynamic Transfer and ACE. PJM will alarm for differences between telemetry received by PJM and those received by the Native/Attaining BA. PJM and Native/Attaining Balancing Authority will secure unit telemetry from an alternate source to be used as a backup should the communications link from the resource become unavailable.
- For a given operating day, any change to the threshold value or percentage of a Dynamic Schedule will be communicated by the resource's market participant to both the Native Balancing Authority and Attaining Balancing Authority prior to both BAs' Day-Ahead market deadlines. If both Native and Attaining BAs agree, the market participant shall coordinate the change effective 0000 hours for the entire operating day with both BAs and shall update the market bid parameters to reflect the changes. No intraday changes will be accepted.

Changes to threshold value or percentage of a Pseudo-Tie will only be permitted if sufficient Long-Term Firm Transmission Service has been obtained. If both Native and Attaining BA's agree, the market participant shall coordinate the change effective 0000 hours for the entire term of transmission service. The market participant shall update their market bid parameters to reflect the changes. Any intraday changes to the threshold value or percentage of a Pseudo-Tie

for economic or emergency purposes may be facilitated by block energy scheduling via NERC tags with due coordination.

- Market participants of dynamically transferred resources must coordinate and gain Native and Attaining BA agreement on:
  - Primary and redundant Dynamic Transfer Signal (telemetry)
  - Additional calculations or processing required for the Dynamic Transfer Signal [ii].
  - Coordinating the use of same value in ACE for loss of Pseudo-Tie transfer telemetry [i]
  - Reliability Coordinator (RC) for the pseudo-tied facilities
  - Any ramping limitations to avoid large changes to the Native/Attaining Balancing Authority ACE
  - The accounting of losses resulting from the Dynamic Transfer. This may result in the resource to make arrangements for loss handling across the transfer path (impacted transmission owners) from Native BA to Attaining BA to effectively deliver the resource's RPM/FRR commitments (in ICAP terms) into PJM
  - Ensuring generator Dynamic Transfer MW flows are uni-directional (i.e., from the Native BA to the Attaining BA)
  - Real-time communication mechanisms and contact points
- If the Native BA or RC anticipates the need to operate a dynamically transferred unit to serve its load (e.g., the resource was not given a Day-Ahead award in the Attaining BA, but the Native BA requires the generator for local voltage support), a joint operating procedure may need to be developed.
- Requirements around generation, transmission outage coordination and system restoration shall be addressed in joint operating procedures.
- If a dynamically transferred unit is self-scheduled in the PJM Real-Time Energy Market, the Market Participant must notify PJM Dispatch at least 20 minutes in advance when the instantaneous MW value of the Dynamic Transfer is to be changed. This advance notice is required so that adequate system control may be maintained. If in the event that the NERC tag(s) cannot be processed, a call is required to the PJM Master Coordinator for notification of change in MW output prior to changing.
- Should a unit from which all or a portion of the output is currently dynamically transferred in to or out of PJM trip off-line, the Market Participant shall notify the PJM Dispatch immediately of the value of the Dynamic Transfer at the time of the trip. Additionally, the responsible Market Participant or market operating center should immediately adjust the NERC tag(s) as applicable to reflect the energy loss. The outage shall be communicated via PJM eDART [xvi].
- Pseudo-Tied resources transferring entire unit output or using the method to dynamically transfer **above** a threshold megawatt can be used to provide Synchronized Reserves[i] (primary reserves) only in the Attaining BA [xi] and must acquire Firm Transmission

Service. Pseudo-Tied units where the unit's entire output is transferred into PJM can provide Non-Synchronized Reserve [xvii] if eligible.

- Pseudo-Tied resources transferring the entire unit output or using the option to dynamically transfer **above** a threshold megawatt can be used to provide Regulation only in the Attaining Balancing Authority [xi] and must acquire Firm Transmission Service. The requirements for resources to qualify and provide Regulation service are documented in [xiii] [xiv]. Further, the resources must be capable of receiving nodal economic dispatch basepoints from PJM, and the resources should make automatic regulation control signals [viii] available to PJM.
- A generating unit with pseudo-tied resources using the percentage method can provide Synchronized Reserves and Regulation Services in both Balancing Authorities only if Market Participants can provide an auditable technical solution that is agreed upon by both Bas, which ensures compliance with applicable NERC standards such as [vi] [xi] [xix] [xx].

Absent such an agreed upon auditable technical solution, a generating unit with pseudo-tied resources using the percentage method can provide Synchronized Reserves and Regulation Service in only one Balancing Authority. An agreement for minimum term of one year between Market Participants of the unit and both Balancing Authorities to this effect is required.

In both cases,

- Firm Transmission service is required, along with other qualifying requirements documented in [xiii] [xiv].
- Market Participants are required to agree upon the method to compute telemetry signals for separately marketed shares of the unit and are responsible for the accuracy of telemetry provided to both Balancing Authorities.
- Non-Synchronized Reserve cannot be provided in either Balancing Authority.
- For a Dynamic Transfer that is tagged, the Market Participant must coordinate the implementation of the curtailment with impacted RC/BA. The Market Participant is also required to reflect the updated unit parameters in PJM systems. The Dynamic Transfer MW must be maintained at or below the reliability limit established by the Transmission Loading Relief Procedure curtailment.
- Market Participants must enter applicable interval Meter Values in the PJM Power Meter system in accordance with the established next business day submission deadline rules. These values will include either hourly or five-minute level if applicable, integrations of the Dynamic Transfer megawatt calculated in real-time, and PJM will verify them against the applicable interval values of these transfers as calculated in the PJM EMS. It is the Market Participant's responsibility to ensure that they cross check their data with the respective external Balancing Authority before the given day's submission deadline when making data entries into Power Meter such that when PJM later performs NERC checkout of Actual or Schedule totals with the given external BA there should be no discrepancies.
- The following restrictions apply to non-capacity portion of Dynamic Transfers:

  - In anticipation of an immediate capacity emergency in the unit's Native Balancing Authority, the Native Balancing Authority may request values of the non-capacity backed portion of Dynamic Transfers to zero. The Native Balancing Authority will request this action only when it has declared NERC Energy Emergency Alert (EEA) Level 2, indicating that a capacity emergency situation is imminent to the point that emergency procedures are foreseen or have been implemented up to, but not including, curtailments of firm load commitments. The Native Balancing Authority will provide as much notice as possible to PJM dispatch when this action becomes necessary, and PJM dispatch will make every effort to accommodate this request as expeditiously as possible. The Market Participant must coordinate with both BAs based on pre-existing procedures.
  - Dynamic Transfers with RPM Capacity obligations cannot be reduced by the Native Balancing Authority due to a capacity emergency in the Native BA. Instead, the Native BA can request to make an emergency energy purchase after it has declared an NERC EEA Level 2.
  - Non-capacity generating units may be dynamically scheduled into PJM utilizing either Firm or Non-Firm Transmission Service on system(s) external to PJM. However, if curtailment of a Dynamic Schedule due to the non-firm nature of the Transmission Service utilized on systems external to PJM causes real-time operational difficulties, PJM may suspend the ability for the generator to dynamically schedule into PJM until such time as Firm Transmission Service on the external system(s) is procured to minimize the probability of future curtailments.
- LMP and Base Point Requirements must be satisfied as follows:
  - A Pseudo-Tie must receive a unit level basepoint and nodal LMP
  - All Dynamic Schedules will only receive interface pricing
  - If a self-scheduled resource using a Dynamic Schedule wishes to receive an existing external interface LMP to follow PJM dispatch, PJM shall electronically communicate the interface LMP
  - If PJM determines that a new interface LMP is required to support the Dynamic Schedule, PJM will work with the Market Seller to create a new interface LMP pursuant to section 2.6A of Attachment K-Appendix of the PJM Tariff and Schedule 1 of the Operating Agreement.
- If the Market Seller of a dynamically transferred unit is exporting energy from PJM at the same time any of that entity's units are dynamically transferring energy into PJM, and the energy being exported is flowing across the same PJM interface as the dynamically transferred import would flow were it not dynamically transferred, then the energy being exported (up to the amount being dynamically transferred into PJM) will be priced at the higher of the dynamically transferred unit's bus price or the interface where the energy is being purchased. Any remaining energy being exported from PJM by this Market Seller will be priced at the appropriate export interface.

- For intermittent generation, such as wind or solar units, additional information as listed in Manual 14D [xii] shall be made available to PJM for developing a power forecast.
- Termination of Dynamic Transfers must be coordinated between Native/Attaining Balancing Authority and the Market Seller.
- An external generator that would like to offer services can exercise only one Dynamic Transfer type: Dynamic Schedule or Pseudo-Tie. Portions of a generator cannot be offered in different types.
- The minimum term of a Dynamic Transfer shall be no less than one year from the date of implementation. Pseudo-Ties shall only use long-term firm transmission service to ensure that the impacts are adequately evaluated.
- PJM will determine the feasibility of implementing a Dynamic Transfer based on the electrical proximity ([x], Exhibit 4) and the extent of detailed modeling required. Consistent with the NERC Dynamic Transfer Reference Guidelines [iii], if the reliability impact of implementing a Pseudo-Tie cannot be adequately addressed, or poses risks to the stability/quality of EMS model, PJM may require a Dynamic Schedule.
- Dynamic Transfers cannot be used to provide reactive services in the Attaining Balancing Authority.

Note:
The above mentioned business rules and modeling requirements are summarized in section F.5.

F.5 Dynamic Transfer Requirements Summary

Market Service	Requirement	Pseudo-Tie			Dynamic Schedule		
		Entirely	Above Threshold	Percent	Entirely	Above Threshold	Percent
Capacity	Transmission Service	Firm Network External Designated (NEDS) >= RPM/ FRR Committed ICAP. Capacity Performance Resources require Firm Transmission service with rollover rights			Firm Network External Designated (NEDS) >= RPM/ FRR Committed ICAP		
	NERC Tagging	Not Required. Capacity Performance resources cannot be tagged.			Required		
	Letter of Non Recallability	Required					
	Product Type	All Product Types including Capacity Performance (and associated obligations)			No Capacity Performance. All Dynamic Scheduled Capacity resources have a sunset date of 06/01/2020		
	Day Ahead	Must Offer >= RPM/FRR ICAP Committed					
	Outage Reporting	eDART & eGADS Required; Update Markets Gateway parameters to reflect outage					
Energy	Transmission Service	Firm Network External Designated (NEDS)			Firm Network External Designated (NEDS) /Non-Firm		
	NERC Tagging	May be required[3]			Required		

Market Service	Requirement	Pseudo-Tie			Dynamic Schedule		
		Entirely	Above Threshold	Percent	Entirely	Above Threshold	Percent
	Outage Reporting	eDART Required & eGADS Requested; Update Markets Gateway parameters to reflect outage					
	Nodal Representation-EMS, LMP	Yes			Interface Pricing Only. No nodal representation		
	Self-Scheduled Gen (move up/ down)	20 min notice					
	Start up and No Load Costs	Eligible if entire unit is transferred, called on by PJM					
Ancillary Services (Regulation, Contingency Reserves)	Transmission Service	Firm Network External Designated (NEDS)			Not Eligible		
	NERC Tagging	May be required[3]			Not Eligible		
	Outage Reporting	Notify PJM Dispatch immediately			Not Eligible		
	Regulation Qualification & Scoring	Same as PJM internal resources. Percent Method limited to 1 BA unless agreed upon auditable technical solution is provided by Market Participants.			Not Eligible		

Market Service	Requirement	Pseudo-Tie			Dynamic Schedule		
		Entirely	Above Threshold	Percent	Entirely	Above Threshold	Percent
	Synch Reserves	Eligible if meets PJM Criteria. Percent Method limited to 1 BA unless agreed upon auditable technical solution is provided by Market Participants.			Not Eligible		
	Non-Synch Reserves	Eligible if meets PJM Criteria	Not Eligible				
	Secondary Reserve	Eligible if meets PJM criteria	Not Eligible				
Other Requirements	Power Meter Checkout	Required					
	Redundant Path Telemetry	Required					
	Time Frame for Implementation	12-30 Months			3-6 Months		
	Cost of Implementation	Borne by Resource Owner			None		

Market Service	Requirement	Pseudo-Tie			Dynamic Schedule		
		Entirely	Above Threshold	Percent	Entirely	Above Threshold	Percent
	Transmission Reservation (Firm/Non-Firm) Interruptions due to TLR.	Notify PJM Dispatch immediately					

Exhibit 15: Dynamic Transfer Requirements Summary

F.6 References

1. Glossary of Terms Used in NERC Reliability Standards – updated November 5, 2025: (https://www.nerc.com/pa/Stand/GlossaryofTerms/Glossary_of_Terms.pdf)
2. NERC Standard BAL-005-1 - Balancing Authority Control: (https://www.nerc.com/globalassets/standards/reliability-standards/bal/bal-005-1.pdf)
3. NERC Operating Manual , NERC Dynamic Transfer Reference Guidelines: (http://www.nerc.com/comm/OC/Pages/Operating-Manual.aspx)
4. NERC Standard BAL-003-2 - Frequency Response and Frequency Bias Setting: (https://www.nerc.com/globalassets/standards/reliability-standards/bal/bal-003-2.pdf)
5. PJM Manual 1: Control Center and Data Exchange Requirements, Section 5.2.1: (http://www.pjm.com/~/media/documents/manuals/m01.ashx)
6. PJM Manual 14D: Generator Operational Requirements, Section 4.1.4: (http://www.pjm.com/~/media/documents/manuals/m14d.ashx)
7. PJM Regional Transmission and Energy Scheduling Practices document, Section 1.2.12: (http://www.pjm.com/~/media/committees-groups/committees/mic/20160210/20160210-item-09c-regional-transmission-and-energy-scheduling-practices-v25-clean.ashx)
8. PJM Manual 3A: Energy Management System Model Updates and Quality Assurance :(http://www.pjm.com/~/media/documents/manuals/m03a.ashx)
9. NERC Standard BAL-002-3 - Disturbance Control Standard - Contingency Reserve for Recovery from a Balancing Contingency Event: (https://www.nerc.com/globalassets/standards/reliability-standards/bal/bal-002-3.pdf)
10. PJM Manual 14D: Generator Operational Requirements, Section 8: (http://www.pjm.com/~/media/documents/manuals/m14d.ashx)
11. PJM Manual 11: Energy & Ancillary Services Market Operations: (http://www.pjm.com/~/media/documents/manuals/m11.ashx)
12. PJM Manual 12: Balancing Operations, Sections 4.4, 4.5: (http://www.pjm.com/~/media/documents/manuals/m12.ashx)
13. PJM Manual 18: PJM Capacity Market, Revision 28, Sections 4.2.2: (http://www.pjm.com/~/media/documents/manuals/m18.ashx)
14. PJM Manual 10: Pre-Scheduling Operations, Sections 2: (http://www.pjm.com/~/media/documents/manuals/m10.ashx)
15. Operating Agreement of PJM Interconnection, L.L.C., Section 1.7.19A.01: (https://agreements.pjm.com/oatt/4464)
16. PJM Open Access Transmission Tariff, Attachment K, Section 1.12 (https://agreements.pjm.com/oatt/4469)

17. NERC Standard BAL-001-2 - Real Power Balancing Control Performance: (https://www.nerc.com/globalassets/standards/reliability-standards/bal/bal-001-2.pdf)

Revision History

Revision 57 (04/22/2026):

- Periodic Review updated to address:
  - Updated manual ownership from Kevin Hatch to Paul Dajewski
  - Cover-to-cover changes: Corrected punctuation, spelling and grammar, changed from exhibit numbers to exhibit titles in body, updated BAL-001, BAL-002, BAL-003, and BAL-005 for new revisions
  - Removed references to retired NERC standards INT-001-3 and INT-004-3.1
  - Removed "Dispatching Timeline" exhibit from Section 1.1
  - Updated Section 2.1.2 to remove Hydro Calculator, changed PI Process Book to PI Vision, and added Transient Stability Analysis
  - Updated Section 2.1.3 Phone Recording Device description
  - Updated Section 3.1.1 PJM Area Control Error
  - Updated Real Time Data Sources in Section 3.1.2
  - Updated to ensure time error correction All-Call is initiated in advance of the time error correction in Section 3.2.1
  - Updated PJM Actions for loading synchronized reserves in Section 4.1.2
  - Renamed Section 4.2 from Shared Reserves to Simultaneous Activation of Reserves (NPCC)
  - Changed shared reserves to activated reserves in Section 4.2
  - Removed specific control zones in Section 4.2
  - Updated Section 4.5.1 to include the specific Black Start Service Section of this manual

Revision 56 (10/01/2025):

- Updated Sections 2.1.1, 2.1.2, 3.1.2 and 3.1.3. to update description of PSCE, remove reference to RegD, update Exhibit 6 and associated text within section 3.1.3.
- Updated Sections 4.3. Regulation and 4.4. Qualifying Regulation Resources:
- Changed reference from operating hour to interval hour. Updated from 100 hours to 200 30 minute intervals for daily score calculations.
- Removed reference to two types of Regulation signals and RegD.

- Number of regulation certification tests for new resources decreased from 3 tests to 2 tests.
- Number of regulation certification tests for disqualified resources decreased from 3 tests to 1 test.
- Renamed Section 4.3.2 Regulation Signals to Regulation Signal.
- Updated Regulation Requirements in Section 4.3.3 Determining Regulation Assignment.
- Updated language around changes to the signal path re-test – existing resource owner under Section 4.4.1 Regulation Certification Qualification.
- Deleted Section 4.4.3 Certifying Multiple Combustion Turbines or Hydro Units at a Single Site and Regulation Excess paragraph in Section 4.3.4 Dispatching Regulation.
- Removed Accuracy, Delay and Precision. Updated formulas for Performance Scores.
- Added a new Section 4.4.9 to describe a new rule about regulation de-assignment.

Revision 55 (06/18/2025):

- Periodic Review
  - Cover-to-cover changes: Corrected punctuation, grammar, capitalization
  - Section 3 .1.2:
    - Replaced "applications" with "Clearing Engines"
    - Clarified ASO does not calculate final market clearing price
    - Clarify SCED's solution output is known as a "case"
  - Section 4.5
    - Re-Write of verbiage in Black Start Service Section
    - Clarified annual testing criteria
  - Section 5.4.3
    - Clarified the notification process of initiating and ending off-cost operations
  - Section5.4.4
    - Clarified non-market facilities are controlled with non-market PCLLRWs
  - M12 Attachment F.4
    - Added verbiage clarifying notification expectations for Dynamic Transfers
  - M12 Attachment B.2
    - Updated actual overload controlling criteria
  - M12 Attachment B.2 Notes 4 & 6
    - Additional language detailing emergency minimums for hybrid resources
    - Additional language for hybrid resources with battery component

Revision 54 (12/17/2024):

- RCSTF Short Term Reserve Deployment Changes (Section 4.4.8 Deleted)

Revision 53 (07/24/2024):

- Added omitted language from Fuel Requirement for Black Start Resources (FRBSR)
- Section 4.5.10 - Added certification of fuel and non-fuel consumables and removed six month fuel/energy verification requirement
- Section 4.5.12 - Added certification of fuel inventory requirements
- Section 4.5.13 - Added certification documentation to testing records
- Section 4.5.14 - Added exceptions to fuel inventory requirements

Revision 52 (03/20/2024):

- Periodic Review
- Section 3.1.2 Real time market application process flow diagram updated to match M-11
- Section 3.1.2 Changed "or" to "and" for solar and wind resources
- Section 4.3.3 Updated bi-lateral regulation to reference M-11
- Section 4.4.8 Deleted reference to compensation for regulation resources
- Section 4.5.4 & 4.5.15 Grammatical & typo cleanup
- Attachment B Updated with solar-hybrid resource information
- Attachment F Updated references to match manuals from 14A to 14H

Revision 51 (12/20/2023):

- 3.1.2 PJM Control Implementation
  - Added language to show inclusion of solar resources
- Attachment B.1: Non-Cost Measures
  - Added language to show the inclusion of solar resources
  - Revised language to clarify how curtail resources
- Attachment B.2: Generation Re-Dispatch
  - Note 3: Revised language to clarify definition of an Intermittent Resource's Economic Minimum
  - PJM Member Actions: Added language to show the inclusion of solar resources
- Attachment F: Dynamic Transfers
  - Added Language to show inclusion of solar resources

Revision 49 (09/20/2023):

- Updated section 4.1.2 to include clarifying language under "PJM Actions" & "Member Actions" for resources to respond to synchronized reserve event when either an initiating

signal is received via EMS datalinks (ICCP or DNP3 protocols), or the PJM All-Call message
- Administrative Change included in this publish to fix the Attachment F.5 Table

Revision 48 (03/22/2023):
- Cover to cover Periodic Review
- Approval section corrected name & title
- Section 2.1.3 change made to a generic reference "phone" recording device
- Section 3.1.2 Emphasized RT SCED in bold to match other headings in section
- Section 3.5 & Attachment C unnecessary bullets were removed

Administrative Change (Approved by Donnie Bielak 02/2/2023):
- Fixed Section 4.5.16 in the Table of Contents

Administrative Change (Dave Anders approved 9/22/2022):
- Deleted “External Resource Must Offer Agreement” in Attachment F, section F.2. Capacity Market Seller’s written commitment to the RPM must-offer requirement is to be demonstrated through the External Resource Officer Certification in accordance with Manual 18, rev. 54.

Revision 47 (10/1/2022):
- Section 3.1.2 PJM Control Implementation
- removed reference to Tier 2 Reserve
- Section 4.3 VACAR Reserve Sharing
- removed to coincide with Dominion-Virginia Power exiting VACAR reserve sharing group.
- Adjusted bullet numbering and references in section 4.3 through 4.6
- Update to Attachment F exhibit 16 removing Day Ahead Scheduling Reserve from Market Service, update Requirement from Reserve Credits to Secondary Reserve

Administrative Change:
- Added a cross reference to M03 for the term “Stability Limits” in Section 5.5.

Revision 46 (6/1/2022):
- Section 5.5
  - Added new section addressing Stability Limited Generation.

Revision 45 (3/23/2022):
- Section 3.1.1
  - Removed outdated references to former Attachment H under Measurements and Compliance to Attachment E PJM Reporting of NERC BAL Standards

- Section 4.5.5
  - Removed Notifies LSEs of a resource's certification for Regulation within three business days
- Attachment E
  - Updated E.1 Daily Data Support, Changed E.3 to E.2 PJM Frequency Bias,
  - Removed E.2 Inadvertent Interchange Calculation section, and NERC Disturbance Control Standard Report

Revision 44 (3/1/2022)

- Updated manual ownership from Rebecca Carroll to Donnie Bielak
- Section 4.5.7
  - Added language to extend the logic of regulation performance group performance score sharing to the historic performance score.

Revision 43 (6/6/2021):

- Section 4.6:
  - Updated references to the PJM Tariff and PJM manuals
  - Updated capitalization of defined terms
- Section 4.6.9:
  - Added conditions for Black Start Units entering Black Start Service on or after June 6, 2021 to provide service for capital cost recovery period plus remaining life of the unit
  - Added conditions for these units to terminate Black Start Service
- Section 4.6.14:
  - Added 90 day period to make repairs to Black Start Unit including one year extension period with PJM approval
  - Added language that Black Start revenues may be deferred until the following month if a Black Start Unit submits its black start test after the 25th day of the month
- Added Section 4.6.16
  - Added conditions for Black Start Unit substitution

Revision 42 (01/27/2021):

- Periodic Review:
- Section 2.1.2 PC Applications
  - Updated two settlement terminology to day ahead in the MDB application
  - Removed reference to the resource scheduling and commitment tool
  - Added references to DIMA & RAC
- Section 4.1.1 Monitoring Reserves

  - Updated reference from RFC BAL Standards to NERC Resource and Demand Balancing (BAL) Reliability Standards
- Section 4.6.8 Product Description
  - Removed specific PJM generator reference and updated to any generator for black start unit starting requirements
- Section 5.3.3 Action in a High – Voltage Situation
  - Added reference to PJM M03 Transmission Operations section 3.7 High Voltage Operation & PJM M13 Emergency Operations section 2.4.7 High System Voltage

Revision 41 (11/19/2020):

- Section 1.1 Scope and Purpose of Dispatching
  - Updated Two-Pass System terminology to Day-Ahead market
  - Updated reference from Manual 10 to Manual 11
- Section 3.1.1
  - Updated reference from Exhibit 4 to Exhibit 2
- Section 3.1.2 PJM Control Implementation
  - Updated dispatch signals section to align with M11 section 2.5
  - Added section on operator SCED case bias
  - Replaced exhibit 4 Calculation of Dispatch Price & Megawatt Signals with Real Time Market Application Process Flow
- Section 4.1.2: Loading Reserves
  - Removed manual method description based on mention of manual method in the paragraph
- Attachment B2: Generation Re-dispatch
  - Updated re dispatch terminology for $/MW effect
  - Replaced loss of life with equipment degradation for transmission equipment violating its equipment limitations
  - Referenced eligibility of units to set LMP to M11 section 2.7
- Attachment E2: Re formatted control standard reports to fit page

Revision 40 (03/26/2020):

- Periodic Review updated to address in all sections:
  - Standard grammar
  - Standard punctuation
  - Capitalization – all capitalized defined terms checked in OA, Tariff and RAA as well as within Manual 12 and the NERC glossary of terms
  - Check links

  - Check names of PJM departments/divisions
  - Remove extra words/add missing words – queried when not obvious
  - Fix spelling errors
  - Fix spacing errors
  - Put times, numbers, phone numbers and units of measure into consistent format
- Updated manual ownership from Chris Pilong to Rebecca Carroll
- About this Manual – updated Bulk Power Electric Supply system facilities to Bulk Power System
- About this Manual – added a reference to the Regional Transmission and Energy Scheduling Practices document
- Section 3.3 – deleted entire section. Section 2.1 of the Regional Transmission and Energy Scheduling Practices document is the official source of this information
- Section 3.4 – deleted entire section. Section 2.2 of the Regional Transmission and Energy Scheduling Practices document is the official source of this information
- Section 4.1.2 and Attachment D – updated language to be consistent with the NERC definition of a Disturbance Control Standard (DCS) event
- Attachment B Section 3.4 – changed cost-capped to offer-capped
- Attachment D – added the NERC definition for a Reportable Disturbance
- Attachment F Section F3 – updated references to PJM Manual 03A which were recently changed

Revision 39 (02/21/2019)

- Section 3 and Attachment D – removed version numbers from BAL-001 and BAL-002 references
- Added sub section 3.6 for Primary Frequency Response Performance
- Cover to cover periodic review

Revision 38 (04/20/2018):

- Section F.2, previously section F.4, completely revised to reflect new eligibility criteria approved by FERC in the External Capacity Filing as well as updated language for Estimates, PJM Deliverables and Withdrawals.
- Section F.3 contains minor changes including removal of feasibility language which was moved to section F.2
- Section F.4, previously section F.2, includes updated PowerMeter submission language.
- Section F.5 contains minor changes to reflect updates made in the previous sections.

Revision 37 (11/16/2017):

- Update to Section 4.6.9 to add requirements for new Black Start units entering the service.

Administrative Change (11/06/2017):

- Update to Section 4.6.1 to replace reference to Manual 14D: Section 9: Black Start Selection Process/Black Start Replacement Process to Section 10: Black Start Generation Procurement

Revision 36 (02/01/2017):

- Update to Section 4.4.3 to update regulation requirement definition.

Revision 35 (08/25/2016):

- Update to Section 4.4- Regulation to clarify/remove language to align with current operations and removal of information already outlined in Manual 11- Energy & Ancillary Services Market Operations
- Update to Section 3.1.3 PJM Member Control Implementation with conforming changes to current data exchange
- Update to Attachment E- PJM Reporting Of NERC BAL Standard and Section 3.1.1 PJM Area Control Error to align with newly approved NERC balancing standards
    - BAL-001-1, BAAL replaces CPS2, reporting requirement removed
    - BAL-003-1, Updated Frequency Bias calculation and timeline
    - Update black start links and conforming changes in Section 4.6.10 Performance Standards and Attachment C: PJM Black Start Test Report Form

Revision 34 (04/28/2016):

- *Added Attachment F: Dynamic Transfers*
- *Administrative Change:*
    - Updated references from eMkts to Markets Gateway
    - Updated references from eMeter to Power Meter

Revision 33 (12/01/2015):

- Updates to Section 3.2 around Time Error Correction to eliminate mention of Midwest ISO as the Interconnection Time Monitor.
- Updates to Section 4.1.1 and Appendix A around the “Instantaneous Reserve Check” to correspond with recent changes to the IRC application & process within eDART.
- Administrative Change:
    - Updated references from edata to Data Viewer
    - Updated references from eMkts to Markets Gateway
- Periodic Review

Revision 32 (04/06/2015):

Updates to Section 4.4 and 4.5 and any subsections within it:

- Language for regulation range
- Language on regulation testing requirements
- Language on basepoint definition
- Added new Exhibit 12 and corrected Exhibit numbers accordingly
- Administrative Change: Updated references from ESS to ExSchedule

Revision 31 (08/21/2014):

These changes pertain to Section 4.5 and any subsections within it:

- *"PJM Actions" section added to Section 4.5 - Taken from previous subsections to give an overall description*
- *Examples of "signal path change" given in Section 4.5.1*
- *Added value of basepoint in PJM Member Actions*
- *Notification time changed from 60 minutes to 24 hours*
- *No self-test for increasing regulating capability*
- *Corrected typo in Performance Score Calculation*

Revision 30 (12/1/2013):

- Regulation Requirement will be a fixed value (525 MW off-peak 700 MW on-peak) in lieu of a percentage of the Load Forecast.

Revision 29 (11/01/2013):

Two changes for calculation of performance scores:

- §4.5.9 Performance Scores during Periods with Insufficient Data – When data is unavailable during the operating for periods of greater than 15 contiguous minutes or partial hour assignment the historical performance score will be used as the actual hourly performance score.
- §4.5.10 Performance Scores for Regulation Assignments with Limited Notification – Performance scoring will be 10 minutes after PJM Dispatch logs that a resource is providing regulation.

Revision 28 (9/9/2013):

- Section 4.6 - Updated language to reflect the System Restoration Strategy Task Force recommendations for Black Start Service changes.
- Attachment C – Updated link for Black Start Test Report Forms

Revision 27 (12/20/2012):

- Section 3.5 – Update language on inadvertent interchange.

- Section 4.5 – Update language regarding regulation testing for signal path re-tests.
- Section 5.1 – Added additional clarity on the manual dispatch process for all resources.
- Section 5.4 – Following a review of the Southwestern Blackout Recommendations #13 and #23, a NOTE has been added regarding generation redispatch for non-market facilities exceeding the Load Dump limit.
- Attachment B – Following a review of the Southwestern Blackout Recommendations #13 and #23, a statement has been added that generation redispatch is initiated for post-contingency flows on non-market facilities exceeding the Load Dump limit.
- Attachment E – Clarified language on inadvertent interchange and included language regarding BAL-006.

Revision 26 (effective 9/19/2012):

- Section 2.1.2 – PC Applications added detail about Performance Score Calculation Engine (PSCE).
- Section 3.1.2 – PJM Control Implementation added detail about Regulation A and Regulation D signal.
- Section 3.1.3 – PJM Member Control Implementation added detail about Regulation A and Regulation D signal.
- Section 4.4.2 – Regulation Signals added detail regulation controls signals sent by PJM, including Regulation D, and signals sent by PJM members.
- Section 4.5.1 – Regulation Qualification Test removed square wave and Rate of Compliance for Regulation A testing and added detail for Regulation D testing as well as new PJM Actions and PJM Member Actions.
- Section 4.5.2 – Certifying Regulating Resource added language clarifying self testing as well as new PJM Actions and PJM Member Actions.
- Section 4.5.3 – Certifying Multiple Combustion Turbines or Hydro Units at a Single Site added language methodology to group resources for regulation.
- Section 4.5.4 – Increasing Regulation Capability on a Resource added language clarifying the use of self testing as well as new PJM Actions and PJM Member Actions.
- Section 4.5.6 – Performance Score Calculation this is a new section that replaces the rate of compliance calculation with the performance score calculation method that uses accuracy, delay and precision to evaluate a resources response to the PJM regulation control signal as well as new PJM Actions and PJM Member Actions.
- Section 4.5.7 – Performance Groups this is a new section that describes the data transfer needed for resources that would like to be evaluated together or that will follow other than proportional dispatch as well as new PJM Actions and PJM Member Actions.

Revision 26 (effective 10/1/2012):

- 4.1.2 Loading Reserves add clarification about priority of following regulation during a synchronized reserve event.

- Section 4.4.1 – PJM RTO Regulation Market Obligations added detail about Regulation Requirement and Regulation Offer price.
- Section 4.4.3 – Determining Regulation Assignments changed regulation requirement from 1% to 0.78% and 0.70% variable percentage based on effective MWs.
- Section 4.4.4 – Dispatching Regulation added detail about Regulation A and Regulation D signal.
- Section 4.5.5 – Disqualification and Requalification of a Regulating Resource this section completely replaced the existing section and describes the calculation of the historic performance score which is the last 100 operating hours of the regulating resource or the weighted average of the qualification score as well as new PJM Actions and PJM Member Actions. It also sets the qualification performance threshold at 40%.
- 4.5.8 Performance Scores for Regulation Resources during a Synchronized Reserve Event this section details how Performance Scores will be treated during a Synchronized Reserve Event.

Revision 25 (06/28/2012):

- Updated Section 4 to clarify with Blackstart language.
- Update Exhibit 16 in Section 5.1 to remove DVP voltage limits. Also clarify references to Exhibits 11 and 12 which should have been 15 and 16.
- Updated Section 4.4 requiring AGC for generators providing regulation per BAL-005-0.1b (R2).
- Annual review of M-12

Revision 24 (04/03/2012):

- Attachment B: Updated language regarding PJM issuing PCLLRWs for non-market facilities. Added language regarding post-contingency low voltage PCLLRWs.

Revision 23 (11/16/2011):

- Attachment A: Added note for clarity on IRC calculations. Need to reflect regulation assignments.
- Attachment B: Updated language regarding PJM issuing PCLLRWs for non-market facilities.
- Section 4.6.17: Remove this section completely to incorporate into M-27.
- Section 4.6.15: Remove responsibility for GO to send blackstart test results to LCC.
- Throughout: Update UDS and LAUDS to RT-SCED and IT-SCED, respectively.
- Throughout: Update UDS and LAUDS to RT-SCED and IT-SCED, respectively.

Revision 22 (05/13/2011):

- Attachment A: Updated to reflect June 2010 changes to IRC reporting.

Revision 21 (10/01/2010):

- Attachment B: Transmission Constraint Control Guidelines: Replaced existing note box in section B.2 Generation Redispatch to reflect revision to PJM tariff regarding energy resource curtailments (Docket #ER10-1762-000).

Revision 20 (10/05/2009):

- Annual Review of Manual 12

Revision 19 (06/30/2009):

- Section 4 - Revision included throughout manual to consolidate references and language related to black start resources
- Section 4 – New language to outline NERC standards cost recovery guidelines.
- Made updates to reserves section of Section 4 – changes secondary to supplemental
- Added language to Attachment B for wind operations / curtailments

Revision 18 (07/02/2008):

- Version to correct real-time controlling actions for BES non-market facilities.

Revision 17 (07/01/2008):

- Section 5: Transmission Facility Control - Defined Generation Redispatch procedures for Market versus Non-Market facilities
- Attachment B: Transmission Constraint Control Guidelines – Defined Generation Redispatch procedures for Market versus Non-Market facilities.

Revision 16 (11/01/2007):

- Clarified language for synchronized reserves to include implementing upon the contingent loss of generation equal to 80% or more of its most severe single contingency.
- Added clarification language on black start testing.

Revision 15 (05/15/2007):

- General: Changed references from Control Center Requirements Manual / Dispatching Operations Manual to Control Center and Data Exchange Manual / Balancing Operations Manual.
- Section 2: Added references to EMS alarms generated
- Section 3: Provided additional detail for PJM's ACE calculation and compliance monitoring and reporting efforts performed by Performance Compliance Department. Also relocated Manual 11, Section 7, "External Transaction Scheduling" to this section (PJM Member Actions). Provided clarity
- Section 4: Deleted all references to Automatic Reserve Sharing System for ECAR and MAIN Regions. Provided clarity on Minimum Critical Blackstart requirements, referencing

PJM System Restoration Manual, Attachment A: Minimum Critical Black Start Requirement.

- Section 5: Modified Exhibit 17. Deleted Voltage Coordination Plan.
- Section 7: Relocated this section to Manual 12, Section 3, “System Control”
- Attachment H: Added PJM reporting of NERC BAL standard
- Throughout: Added references to applicable NERC standards
- Throughout: Renamed the manual from Dispatching Operations to Balancing Operations and then changed all “dispatching operations” to “balancing operations” within the manual

Revision 14 (03/01/2007):

- Section 3: (System Control) Modified to clarify the information supplied during dispatch operations.
- Section 4: Providing Ancillary Services—Revised to clarify existing PJM black start business procedures and testing requirements for better alignment with RFC standards.
- Attachment B: (Transmission Constraint Control Guidelines) Modified to clarify the procedures for Generation Redispatch
- Attachment C: PJM Black Start Test Report Form—Revised in line with black start testing requirement changes in Section 4 for better alignment with RFC standards.
- Introduction trimmed to eliminate redundant information.
- List of PJM Manuals exhibit removed, with directions given to PJM Web site where all the manuals can be found. All other exhibits renumbered.
- Revision History permanently moved to the end of the manual.

Revision 13 (5/26/06):

- Revised to reflect changes including demand participation in Ancillary Service Markets, modifications to IRC, common Regulation Market, and Dispatching tools.

Revision 12 (08/16/05):

- Section 4: (Providing Ancillary Services)
- Revised to reflect recent changes to Black Start Service Business Processes
- Included new Attachment C: PJM Black Start Test Report Form
- Included new Attachment D: PJM Auto Load Reject Test Report Form
- Included new Attachment E: PJM Black Start Formulaic Cost Data Form
- Included new Attachment F: PJM Black Start Actual Cost Data Form

Revision 11 (01/01/05):

- Sections 1, 2, 3, 5

- Revised to reflect operations based on the integration of ComEd, AEP, Dayton Power and Light, Duquesne Light, and Dominion

Revision 10 (01/01/04):

- Section 4 (Providing Ancillary Service)
- Revised to reflect the regulation limit relationships.
- Replaced Exhibit 1 with an updated list of PJM Manuals.

Revision 09 (12/01/02):

- Revised Section 4: Providing Ancillary Services
- Incorporated the procedures that the PJM follows to ensure and monitor Black Start Service.

Revision 08 (04/01/02):

- Section 1: Overview
  - Incorporated PJM West / West duties.
- Section 2: Dispatching Tools
  - Incorporated UDS, EES, eData, SCIS, Emergency Procedure Posting Application, All-call software, and Satellite Phones. Removed Accounting Information section and exhibit.
- Section 3: System Control
  - Included reassigning regulation while on Analog Control, Updated Time Error Correction procedure.
- Section 4: Providing Ancillary Services
  - Incorporation of eDart reporting, implementation of Shared Reserves for DCS events, ARS (PJM West), and Regulation Requirement (PJM West).
- Section 5: Transmission Facility Control
  - Clarification of participant duties (Transmission / Generation).
- Attachment A: Instantaneous Reserve Check
  - Removal of company names.
- Attachment B: Voltage Control
  - Attachment Eliminated.

Revision 07 (05/22/01):

- Revised to reflect implementation of PJM Regulation Market.
- Removed Attachment A: Definitions & Abbreviations. Attachment A is being developed into a ‘new’ PJM Manual for ***Definitions and Abbreviations (M-35)***.
- Removed Attachment B: Three-Point Curve Utilization.

- Renamed Attachment C: PJM Instantaneous Reserve Check and Attachment D: Voltage Control, to Attachment A and Attachment B, respectively.

Revision 06 (06/01/00):

- Section 04: Providing Ancillary Services
  - Revised subsection *Regulation* to reflect changes required to implement the PJM Regulation Market on June 1, 2000.
- Attachment E: Process Diagrams
  - Removed to reflect changes required to implement the PJM Regulation Market on June 1, 2000.

Revision 05 (04/01/00):

- Section 05: Transmission Facility Control
  - Removed reference to Maximum Scheduled Generation within subsections: Corrective Control Strategies, Reactive Limitation Control, and NERC Transmission Loading Relief (TLR) Procedure.

Revision 04 (06/03/99):

- Section 02: Dispatching Tools
  - Moved *Generation Control System* from Mainframe Computer Applications section to PC Applications section.
  - Removed *System Security*, *Megawatt Monitor*, and *Marginal Scheduler* from Mainframe Computer Applications section.
  - Added *Network Analysis and SCADA Programs* and *Resource Scheduling and Commitment* to, and removed *Transmission Security System (TSS)* and *Future TSS* from, the PC Applications section.
  - All these changes made to reflect installation of the new Siemens Energy Management System (EMS).
- Changed all references to General Agreement on Parallel Paths (GAPP) to Interchange Distribution Calculator (IDC) to reflect new NERC application.
- Modified section on *Dynamic Mapboard* to reflect the fact that it is now driven by the new Siemens computer.
- Section 05: Transmission Facility Control
  - Added information concerning PJM implementation of the NERC Transmission Loading Relief (TLR) Procedure.

Revision 03 (04/01/98):

- Section 02: Dispatching Tools
  - Revised Exhibit 2.1 to reference "Locational Marginal Price" rather than "Market Clearing Price."

Revision 02 (01/01/98):

- Section 04: Providing Ancillary Services
- Changed "The Regulating Requirement for the PJM RTO is 1.1% of the forecast peak load during On-Peak Periods (from 0500-2359 hours) and 1.1% of the forecast valley during Off-Peak Periods load (from 0000-0459 hours)." from "The Regulating Requirement for the PJM RTO is 1.1% of the forecast peak load during On-Peak Periods (from 0700-2259 hours) and 1.1% of the forecast valley during Off-Peak Periods load (2300-0659 hours)." under "Obligations & Requirements" of "Regulation."

Changed equation:

$$LSEsRegulationObligation = (LSEsLoadAllocationPercentage * PJMRegulationRequirement) - LSEsShareofJoint - OwnedUnitRegulation$$

from:

$$LSEsRegulationObligation = (LSEsLoadAllocationPercentage * PJMRegulationRequirement) - LSEsShareofKeystoneandConemaughRegulation$$

under "Determining Regulation Assignment" of "Regulation."

- Changed "During On-Peak Periods (0500 hours to 2359 hours), the PJM Regulating Requirement is 1.1 % of the PJM RTO's peak load forecast, as determined prior to 0430 hours" from "During On-Peak Periods (0700 hours to 2259 hours), the PJM Regulating Requirement is 1.1 % of the PJM RTO's peak load forecast, as determined prior to 0630 hours" under "Obligations & Requirements" of "Regulation."
- Changed "During Off-Peak Periods (0000 hours to 0459 hours), the PJM Regulating Requirement is 1.1 % of the PJM RTO's valley load forecast, as determined prior to 2330." from "During Off-Peak Periods (2300 hours to 0659 hours), the PJM Regulating Requirement is 1.1 % of the PJM RTO's valley load forecast, as determined prior to 2230." under "Obligations & Requirements" of "Regulation."
- Changed "Prior to 0430 and 2330 each day, the PJM dispatcher provides the following information to the Local Control Centers for the LSEs, via the PJM ALL-CALL:
- PJM forecasted peak load and the PJM forecasted valley load for 0430 and 2330, respectively"
- from "Prior to 0630 and 2230 each day, PJM dispatcher provides the following information to the Local Control Centers for the LSEs, via the PJM ALL-CALL:
    - PJM forecasted peak load and the PJM forecasted valley load for 0630 and 2230, respectively"

under "Obligations & Requirements" of "Regulation."

Changed “Scheduled MW of Joint-Owned Unit Regulation” from “Scheduled MW of joint-owned Regulation for Keystone and Conemaugh Stations” under “Determining Regulation Assignment” of “Regulation.”

Changed “The LSE decides the method of meeting its Regulation Obligation, subsequent to the PJM ALL-CALL notification but no later than 0430 or 2330 for On-Peak and Off-Peak Periods, respectively; the LSE dispatcher reports to PJM the MWs of Regulation by class to meet the LSE’s Regulation objective, plus the amount (MW) of any additional Regulation by class which is presently available to regulate.” from “The LSE decides the method of meeting its Regulation Obligation, subsequent to the PJM ALL-CALL notification but no later than 0630 or 2230 for On-Peak and Off-Peak Periods, respectively; the LSE dispatcher reports to PJM the MWs of Regulation by class to meet the LSE’s Regulation objective, plus the amount (MW) of any additional Regulation by class which is presently available to regulate.” under “Determining Regulation Assignment” of “Regulation.”

- Attachment E: Process Diagrams
  - Added “Attachment E: Process Diagrams”

Revision 01 (07/08/97):

- Section 2: Dispatching Tools
  - Added “Note: In Exhibit 2.1, **Congestion Payment Status** and **Participant Paying Congestion** Data Fields are required for transactions utilizing the option of non-firm transmission service willing to pay congestion which were scheduled and approved prior to June 28, 1997” under “Accounting Information.”
- Section 5: Transmission Facility Control
  - Deleted “...and for non-firm transactions willing to pay congestion” from Exhibit 5.2 note under “Corrective Control Strategies.”

Revision 00 (04/30/97):

- Changed references from PJM Interconnection Association to PJM Interconnection, L.L.C.
- Changed references from PJM to PJM where appropriate.
- Changed references from PJM to PJM RTO where appropriate.
- Changed references from PJM IA to PJM.
- Changed references from IA to PJM.
- Changed references from Mid-Atlantic Market to PJM Interchange Energy Market.
- Changed references from Mid-Atlantic Market Operations Agreement to Operating Agreement of PJM Interconnection, L.L.C.

Revision 00 (03/24/97):

- This revision is a draft of the PJM Manual for ***Balancing Operations.***