PJM Manual 28:

Operating Agreement Accounting

Revision: 105

Effective Date: December 1, 2026

Prepared By
Market Settlements Development Department

PJM © 2026

Table of Contents

Table of Exhibits 6

Approval 7

Current Revision 8

Introduction 9

About PJM Manuals 9
About This Manual 9
Using This Manual 10

Section 1: Market Overview 11

1.1 Market Accounting Overview 11
1.2 Accounting Input Data 13

Section 1A: Revenue Data for Settlements 14

1A.1 Business Rules for Revenue Data for Settlements 14

Section 2: Interface Pricing 18

2.1 Business Rules for Interface Pricing 18
2.2 Day-ahead Interface Pricing 19
2.3 Real-time Interface Pricing 19

Section 3: Spot Market Energy Accounting 21

3.1 Spot Market Accounting Overview 21
3.2 Business Rules for InSchedule and Power Meter Data Submissions 21
3.3 Spot Market Energy 23
3.4 Transmission Loss De-ration Factors 23
3.5 State-estimated vs. Revenue-metered Energy Quantities 24
3.6 Residual Metered Load 25
3.7 Residual Metered Load Aggregate Definitions 25
3.8 Spot Market Energy Charges 26
3.9 Reconciliation for Spot Market Energy Charges 28

3.10 Load Ratio Share 28

Section 4: Regulation Accounting 30

4.1 Regulation Accounting Overview 30
4.2 Regulation Credits 31
4.3 Regulation Charges 42
4.4 Reconciliation for Regulation Charges 45

Section 5: Operating Reserve Accounting 46

5.1 Operating Reserve Accounting Overview 46
5.2 Credit for Operating Reserve 47
5.3 Charges for Operating Reserve 66
5.4 Reconciliation for Operating Reserve Charges 72

Section 6: Synchronized Reserve Accounting 74

6.1 Synchronized Reserve Accounting Overview 74
6.2 Credits for Synchronized Reserve 75
6.3 Charges for Synchronized Reserve 80
6.4 Reconciliation for Synchronized Reserve Charges 84

Section 7: Non-Synchronized Reserve Accounting 85

7.1 Non-Synchronized Reserve Accounting Overview 85
7.2 Credits for Non-Synchronized Reserve 86
7.3 Charges for Non-Synchronized Reserve 88
7.4 Reconciliation for Non-Synchronized Reserve Charges 91

Section 8: Transmission Congestion Accounting Overview 92

8.1 Transmission Congestion Accounting Overview 92
8.2 Transmission Congestion Charges 93
8.3 Reconciliation for Transmission Congestion Charges 97
8.4 Transmission Congestion Credits 98
8.5 Reassignment of Financial Transmission Rights (FTRs) 103

Section 9: Transmission Losses Accounting 105

9.1 Transmission Losses Accounting Overview 105
9.2 Transmission Loss Charges 106
9.3 Reconciliation for Transmission Loss Charges 110
9.4 Transmission Loss Credits 111
9.5 Reconciliation for Transmission Loss Credits 112

Section 10: Emergency Energy Accounting 113

10.1 Emergency Energy Accounting Overview 113
10.2 Emergency Energy Purchases by PJM 113
10.3 Emergency Energy Sales by PJM 114
10.4 Minimum Generation Emergency Purchases by PJM 115
10.5 Minimum Generation Emergency Sales by PJM 116

Section 11: PJM Load Response Programs Accounting 117

11.1 PJM Load Response Programs Overview 117
11.2 PJM Load Response Programs Accounting Procedures 117

Section 12: Metering Reconciliation Accounting 127

12.1 Meter Error Correction Billing 127

Section 13: Station Power Accounting 130

13.1 Station Power Accounting Procedure 130

Section 14: Unscheduled Transmission Service (Loop Flow) Accounting 132

14.1 Unscheduled Transmission Service (Loop Flow) Accounting Procedure 132

Section 15: Market Revenue Neutrality Offset Accounting 133

15.1 Market Revenue Neutrality Offset Overview 133
15.2 Market Revenue Neutrality Offset 134
15.3 Opportunity Cost Credit Owed 136

Section 16: Financial Transmission Rights Auctions Settlement . 137

16.1 FTR Auctions Settlement Overview 137
16.2 FTR Auction Buyers' Charges 138
16.3 FTR Auction Sellers' Credits 139
16.4 Allocation of FTR Auction Revenues 139

Section 17: Auction Revenue Rights Settlements 141

17.1 ARR Settlements Overview 141
17.2 Daily Reassignment of ARRs as load changes 142
17.3 Allocation of Long-term, Annual and Monthly FTR Auction Revenues 143

Section 18: Inadvertent Interchange Accounting 145

18.1 Inadvertent Interchange Billing 145

Section 19: Secondary Reserve Accounting 147

19.1 Secondary Reserve Accounting Overview 147
19.2 Credits for Secondary Reserve 148
19.3 Charges for Secondary Reserve 153
19.4 Reconciliation for Secondary Reserve Charges 155

Section 20: Billing 156

20.1 Billing Process Overview 156

Section 21: Pseudo Tie Settlements 158

21.1 Pseudo Tie Market Participants Overview 158
21.2 Real-time Pseudo Tie Balancing Congestion Refund Charge 158
21.3 Day-ahead Pseudo Tie Transaction 159

Section 22: Open-Loop Hybrid & Energy Storage Resource Charging Energy 160

22.1 Overview of Charging Energy 160
22.2 Charges for Direct Charging Energy 161
22.3 Charges for Load Serving Charging Energy 163

22.4 Methods to Differentiate Direct Charging Energy from Load Serving Charging Energy at an Energy Storage Resource Site 163
22.5 Reconciling Monthly Direct Charging Energy and Load Serving Charging Energy 166

Section 23: Fuel Cost Policy Penalty Settlements 168

23.1 Fuel Cost Policy Penalty Overview 168
23.2 Fuel Cost Policy Penalty Charge 168
23.3 Fuel Cost Policy Penalty Credit 170

Revision History 172

Table of Exhibits

Exhibit 1: Types of PJM Services 12

Approval

Approval Date: 02/23/2026
Effective Date: 12/01/2026~~03/01/2026~~

Susan Kenney, Manager

Market Settlements Development

Current Revision

Revision 105 (12/01/2026)

- Regulation Market Redesign Phase 2 conforming changes (ER24-1772)
- Section 4.1, Section 4.2, Section 4.3
- Updated Regulation Market Clearing Price credit calculations for each product type (RegUp and RegDn)
- Updated Regulation Lost Opportunity Cost credit calculations to account for multiple product types (RegUp and RegDn)
- Added calculations and illustrative examples for intra-commitment opportunity costs
- Replaced set point calculation with the tracking Regulation set point for shoulder opportunity cost calculations
- Created new Section 4.3.1 describing Regulation Obligation and Adjusted Obligation calculations
- Updated Regulation Market Clearing Price charge for each product type (RegUp and RegDn)
- Updated Regulation Lost Opportunity Cost charge calculations to account for RegUp and RegDn purchases
- Section 5.2.6.4 and 5.2.8 – Removed reference to marginal benefit factor that was missed during Regulation Phase 1 manual updates.

~~**Revision 104 (03/01/2026)**~~

- ~~Section 19.2.3 updated to specify Real-time Secondary Reserve opportunity cost is $0 for resources that were committed and cleared as off-line resources.~~

Introduction

Welcome to the ***PJM Manual for Operating Agreement Accounting***. In this Introduction, you will find information about PJM Manuals in general, an overview of this PJM Manual in particular, and information on how to use this manual.

About PJM Manuals

The PJM Manuals are the instructions, rules, procedures, and guidelines established by the PJM for the operation, planning, and accounting requirements of PJM and the PJM Energy Market. The manuals are grouped under the following categories:

- Energy Market
- Regional Transmission Planning Process
- Transmission
- Reserve
- Accounting and Billing
- Administration

For a complete list of all PJM Manuals, go to the Library section on PJM.com.

About This Manual

The ***PJM Manual for Operating Agreement Accounting*** is one of a series of manuals within the Accounting and Billing set of manuals. This manual focuses on the accounting within the PJM Markets. It establishes the basis for the charges and credits for the purchase and sale of energy and related services.

The **PJM Manual for *Operating Agreement Accounting*** consists of 23 sections. The sections are listed in the table of contents beginning on page 2.

Intended Audience

The intended audiences for this PJM Manual for Operating Agreement Accounting are:

- PJM Members and Transmission Customers
- Other Control Areas
- External auditors, lawyers, and regulators
- PJM settlements staff and audit staff
- PJM customer relations and training staff

References

The references to other documents that provide background or additional detail directly related to the ***PJM Manual for Operating Agreement Accounting*** are:

- PJM Manual for ***Open Access Transmission Tariff Accounting (M-27)***
- PJM Manual for ***Balancing Operations (M-12)***
- PJM Manual for ***Billing (M-29)***
- PJM Manual for ***Energy & Ancillary Services Market Operations (M-11)***
- Operating Agreement of PJM Interconnection, L.L.C.
- PJM Open Access Transmission Tariff

Using This Manual

We believe that explaining concepts is just as important as presenting the procedures. This philosophy is reflected in the way we organize the material in this manual. We start each section with an overview. Then, we present details, procedures or references to procedures found in other PJM Manuals.

What You Will Find In This Manual

- A table of contents that lists two levels of subheadings within each of the sections
- An approval page that lists the required approvals and a brief outline of the current revision
- Sections containing the specific guidelines, requirements, or procedures including PJM actions and PJM Member actions
- A section at the end detailing all previous revisions of this PJM Manual

Section 1: Market Overview

Welcome to the Market Overview section of the ***PJM Manual for Operating Agreement Accounting.*** In this section, you will find the following information:

- A description of the PJM Energy Market accounting services (see “Market Accounting Overview”).
- A description of PJM Market Settlements Accounting Input Data (see “Accounting Input Data”).

1.1 Market Accounting Overview

There are several services within the PJM Energy Market for which PJM calculates charges and credits that are allocated among the PJM Members. PJM provides accounting for the following services that are described in detail in the other sections of this PJM Manual.

- Spot Market Energy — Energy bought or sold by Market Participants through the PJM Energy Market.
- Transmission Congestion — The increased cost of energy delivered when the Transmission System is operating under constrained conditions.
- Transmission Losses — Energy requirements in excess of load requirements due to the energy consumed by the electrical impedance characteristics of the Transmission System.
- Regulation — The capability of a specific resource with appropriate telecommunications, control, and response capability to increase or decrease its output in response to a regulating control signal (PJM Manual 12: Balancing Operations).
- Synchronized Reserve – The capability of a specific on-line resource with appropriate telecommunications, control, and response capability to increase output (or reduce consumption) in response to a synchronized reserve event and/or operate at a point that deviates from economic dispatch (including condensing mode) to provide 10-minute reserve (PJM Manual 12: Balancing Operations).
- Non-Synchronized Reserve – The capability of a specific off-line generation resource with appropriate telecommunications, control, and response capability to increase output from an offline state in response to a non-synchronized reserve event to provide 10-minute reserve (PJM Manual 12: Balancing Operations).
- Secondary Reserve – The capability of a specific on-line or off-line resource with appropriate telecommunications, control, and response capability to increase output (or reduce consumption) when directed and/or operate at a point that deviates from economic dispatch (including condensing mode) to provide reserves within a response between 10 – 30 minutes (PJM Manual 12: Balancing Operations).
- Operating Reserve — The amounts of generating capacity scheduled to be available for specified periods of an Operating Day to ensure the reliable operation of PJM.

- Reactive Services — The amounts of generation altered by PJM to maintain reactive reliability.
- Synchronous Condensing — The instructions to generators to operate in synchronous condensing mode for reasons other than reactive support or synchronized reserve to ensure the reliable operation of PJM.
- Emergency Energy — Energy bought from other Control Areas or sold to other Control Areas by PJM due to Emergencies either within PJM or within the other Control Areas.
- PJM Emergency Load Response — The Emergency Load Response Program is designed to provide a method by which end-use customers may be compensated by PJM for voluntarily reducing load during an emergency event.
- PJM Economic Load Response — The Economic Load Response Program is designed to provide incentive to end-use customers or Curtailment Service Providers ("CSP") to enhance the ability and opportunity for reduction of consumption when PJM Locational Marginal Prices ("LMP") are high.
- Metering Reconciliation — Metering errors and corrections that are reconciled at the end of each month by a meter error correction charge adjustment.
- Inadvertent Interchange — Differences between hourly net actual energy flows and net scheduled energy flow into or out of the PJM control area.
- Unscheduled Transmission Service (Loop Flow) — Accounting for agreements between PJM and others for compensation to be paid or received for unscheduled transmission service (loop flow) into or out of the PJM Region.
- Financial Transmission Rights ("FTRs") Auction — Market Participants may purchase/sell FTRs by participating in the Long-term, Annual, and Monthly auctions.
- Auction Revenue Rights ("ARRs") — ARRs are the mechanism by which the proceeds from the FTR auctions are allocated.

These services are applicable to the different types of market participation, as shown in Exhibit 1. Each service is further broken down in the billing statement (PJM Manual 29:*Billing*).

	MARKET BUYERS	MARKET SELLERS	TRANSMISSION CUSTOMERS
Spot Market Energy	x	x	
Regulation	x	x	
Operating Reserves	x	x	
Transmission Congestion	x	x	x
Transmission Losses	x	x	x
Emergency Energy	x	x	

	MARKET BUYERS	MARKET SELLERS	TRANSMISSION CUSTOMERS
Meter Reconciliation	x	x	
Unscheduled Transmission Service	x	x	
Financial Transmission Rights	x	x	x
Auction Revenue Rights	x	x	x

Exhibit 1: Types of PJM Services

The PJM Energy Market accounting is designed to operate on a balanced basis. That is, the total amount of the charges equals the total amount of the credits; there are no residual funds. With certain exceptions, each of the services also operates on a balanced basis. That is, the charges and credits for a particular service, such as regulation, offset each other exactly. In certain cases, charges in excess of credits, or vice versa, in one service are used to offset the costs of providing another service.

1.2 Accounting Input Data

At the end of each operating hour, PJM collects information regarding actual operations during the hour. This information is recorded either by the PJM dispatchers or by automated systems. The market accounting processes use this information as input data. Other accounting input data is provided from various systems and databases. This information includes data describing PJM Members' installed generating resources, scheduling information for PJM Members' transactions, and Transmission System parameters, such as loss factors determined annually by PJM system planning staff. The market accounting processes use this information as described in the following sections of this PJM Manual.

Section 1A: Revenue Data for Settlements

Welcome to the Revenue Data for Settlements section of the PJM Manual for Operating Agreement Accounting. In this section, you will find the following information:

- A description of settlement interval data for the Day-ahead and Real-time Energy Markets.
- An overview of how revenue data submitted by Market Participants is used in the settlement calculations further described in this PJM Manual.

1A.1 Business Rules for Revenue Data for Settlements

PJM settles the Day-ahead Energy Market on an hourly basis and the Real-time Energy Market on a five-minute basis. To reflect these two distinct timeframes, PJM refers to the term “Day-ahead Settlement Interval” throughout this PJM Manual to mean the interval used to settle Day-ahead transactions, which shall be every one clock hour. In addition, PJM refers to the term “Real-time Settlement Interval” throughout this PJM Manual to mean the interval used to settle real-time transactions, which shall be every five minutes.

Revenue Data for Settlements are real-time energy quantities used for accounting and billing and are determined based on data submitted by a Market Participant.

- Generator MW data can be submitted by a Market Participant into Power Meter as either five-minute revenue meter data or hourly revenue meter data. The business rules for electing to submit five minute revenue meter data are specified in Section 3 of this PJM Manual.
- Revenue Data for Settlements for generation resources submitting five-minute revenue meter data is the submitted value for each Real-Time Settlement Interval (five minute interval).
- Once a Market Participant submits five minute revenue meter data for a resource, the Market Participant must continue to provide revenue meter data for that resource on a five minute basis and cannot switch to hourly revenue meter data submissions. If ownership of a resource is transferred between Market Participants and prior to the transfer the resource is submitting five minute revenue meter data, the new owner of the resource must continue to provide revenue meter data on a five minute basis.
- Revenue Data for Settlements for generation resources submitting hourly revenue meter data shall be determined by the following process:
    - For each five minute interval, PJM calculates a time-weighted telemetry MW value and a State Estimator MW value.
        - A time-weighted telemetry MW value is determined based on the prorated time duration that a telemetry MW value is effective over each five minute interval.

$$Time - weighted\ Telemetry\ MW\ value = \sum_{i=1}^{n} (Telemetry\ MW_i) * \left(\frac{Time\ Duration_i}{5\ Minutes}\right)$$

Where n = number of telemetry values in a five minute interval

- For each hour of the Operating Day, PJM calculates an hourly-integrated telemetry MWh value using the time-weighted telemetry MW values for each of the five minute intervals in the hour

$$Hourly\ Integrated\ Telemetry\ MWh = \sum_{i=1}^{n} Time - weighted\ Telemetry\ MWValue_i \div 12$$

Where n = number of Real-time Settlement Intervals in an hour

- Time-weighted State Estimator MW value is determined based on the prorated time duration that a State Estimator MW value is effective over each five minute interval

$$Time - weighted\ SE\ MW\ value = \sum_{i=1}^{n} (SE\ MW_i) * \left(\frac{Time\ Duration_i}{5\ Minutes}\right)$$

Where n = number of SE values in a five minute interval

- For each hour of the Operating Day, PJM calculates an hourly-integrated State Estimator MWh value using the time-weighted State Estimator MW values for each of the five minute intervals in the hour

$$Hourly\ Integrated\ State\ Estimator\ MWh = \sum_{i=1}^{n} Time - weighted\ State\ Estimator\ MW\ Value_i \div 12$$

Where n = number of Real-time Settlement Intervals in an hour

- To determine whether time-weighted Telemetry or time-weighted State Estimator MW values is used to calculate the Revenue Data for Settlements for each five minute interval in an hour, PJM selects the lesser of:
  - the absolute value difference between the Hourly Revenue Meter MWh and the Hourly Integrated Telemetry MWh and
  - the absolute value difference between the Hourly Revenue Meter MWh and the Hourly Integrated State Estimator MWh

C= lesser of (A and B)

Where A = |Hourly Revenue Meter MWh – Hourly Integrated Telemetry MWh |

B = |Hourly Revenue Meter MWh - Hourly Integrated State Estimator MWh|

- If A and B are equal, the time-weighted Telemetry MW values are used to calculate the Revenue Data for Settlements for each five minute interval in an hour.
- A tolerance check is performed to ensure the selected time-weighted MW values are within a tolerance for settlement accuracy.

- If the time-weighted Telemetry MW values are used to calculate the Revenue Data from Settlements, then the following check is performed:
  - If the absolute value of the difference between the Hourly Integrated Telemetry MWh and the Hourly Revenue Meter MWh value is greater than 20 percent and greater than 10 MWh, then the Revenue Data for Settlements for each of the Real-time Settlement Intervals of the hour will be flat-profiled and set equal to the Hourly Revenue Meter MWh.

$$\frac{|Hourly\ Integrated\ Telemetry\ MWh\ -\ Hourly\ Revenue\ Meter\ MWh|}{Hourly\ Revenue\ Meter\ MWh} > 20\%$$

AND

$$|Hourly\ Integrated\ Telemetry\ MWh\ -\ Hourly\ Revenue\ Meter\ MWh| > 10\ MWh$$

- If the time-weighted State Estimator MW values are used to calculate the Revenue Data from Settlements, then the following check is performed:
  - If the absolute value of the difference between the Hourly Integrated State Estimator MWh and the Hourly Revenue Meter MWh value is greater than 20 percent and greater than 10 MWh, then the Revenue Data for Settlements for each of the Real-time Settlement Intervals of the hour will be flat-profiled and set equal to the Hourly Revenue Meter MWh.

$$\frac{|Hourly\ Integrated\ State\ Estimator\ Telemetry\ MWh\ -\ Hourly\ Revenue\ Meter\ MWh|}{Hourly\ Revenue\ Meter\ MWh} > 20\%$$

AND

$$|Hourly\ Integrated\ State\ Estimator\ MWh\ -\ Hourly\ Revenue\ Meter\ MWh| > 10\ MWh$$

- The Revenue Data for Settlements for each five minute interval in an hour is calculated as follows:.

If C is equal to A, then

$$Revenue\ Data\ for\ Settlements\ =\ Time-weighted\ Telemetry\ MW$$
$$+(Hourly\ Revenue\ Meter\ MWh - Hourly\ Integrated\ Telemetry\ MWh)$$

$$*12*\left|\frac{Time-weighted\ Telemetry\ MW}{\sum_{i=1}^{n}\left|Time-weighted\ Telemetry\ MW\ Value_i\right|}\right|$$

Where n = number of Real-time Settlement Intervals in an hour

If C is equal to B, then

$$Revenue\ Data\ for\ Settlements\ =\ Time-weighted\ State\ Estimator\ MW$$
$$+(Hourly\ Revenue\ Meter\ MWh - Hourly\ Integrated\ State\ Estimator\ MWh)$$

$$*12*\left|\frac{Time - weighted\ State\ Estimator\ MW}{\sum_{i=1}^{n}\left|Time - weighted\ State\ Estimator\ MW\ Value_i\right|}\right|$$

Where n = number of Real-time Settlement Intervals in an hour

- If a Market Participant is unable to provide telemetry for a generating resource, the Revenue Data for Settlements for each of the five minute intervals of the hour is equal to the hourly revenue meter MWh value.
- For all energy transactions for which telemetry is not available, the Revenue Data for Settlements is equal to the MW value for the five minute intervals that the energy transaction is dispatched or scheduled.
- For Demand Resources, Revenue Data for Settlements is equal to the revenue meter MW data submitted by the Market Participant for the five minute intervals that the resource is dispatched. A Demand Resource can submit either hourly or five minute load reduction data.
- For load, the Revenue Data for Settlements for each of the five minute intervals of the hour is equal to the hourly submitted MWh value.

Section 2: Interface Pricing

Welcome to the Interface Pricing section of the ***PJM Manual for Operating Agreement Accounting***. In this section, you will find the following information:

- An overview of the interface pricing settlements business rules (see “Business Rules for Interface Pricing”).
- An overview of the interface pricing settlements business rules for transactions occurring in the Day-ahead (see “Day-ahead Interface Pricing”).
- An overview of the interface pricing settlements business rules for transactions occurring in the Real-time (see “Real-time Interface Pricing”).

2.1 Business Rules for Interface Pricing

Market Participants have the ability to transact energy in-to, out-of, or through the PJM RTO (see OASIS – Regional Transmission and Energy Scheduling Practices for details on the PJM processes for facilitating the transaction and scheduling process). The source and sink pricing assignments for these external transactions are determined using mappings that use a combination of the ExSchedule system source and sink selection, the NERC Tag, and the OASIS reservation.

During any hour in which any entity makes any purchases from other external areas outside of such area or sub-area (other than delivery of external designated Network Resources or such other exceptions specifically documented for such area or sub-area) at the same time that energy sales into PJM are being made, pricing will revert to the applicable Import or Export Pricing Point that would otherwise be assigned to such external area or sub-area. There are currently no exceptions to this process.

During any hour in which any entity purchases energy from PJM for delivery into such area or sub-area while sales from such area to other external areas are simultaneously implemented (subject to any exceptions specifically documented for such area or sub-area in the PJM Manuals), pricing will revert to the applicable Import or Export Pricing Point that would otherwise be assigned to such external area or sub-area. There are currently no exceptions to this process.

Effective May 31, 2020, the specific interface pricing rules for NERC Tags which source or sink in CPLE or DUKE have been removed. Effective November 2, 2020, the specific interface pricing rules for NERC Tags which source or sink in NCMPA1 has been removed. Interface pricing rules for NERC Tags which source or sink in CPLE, DUKE or NCMPA1 will follow the rules as described in Sections 2.2 and 2.3 of this PJM Manual.

2.2 Day-ahead Interface Pricing

The below provides guidance on the rules associated with day-ahead interface pricing.

- For Day-ahead export (out-of PJM RTO) transactions where the source and sink on the OASIS are the same, the source and sink price is assigned based on the Export Pricing Point selected by the customer in the ExSchedule system. Where the source and sink are not the same, the source price is assigned based on the source of the OASIS reservation being used, while the sink price is the Export Pricing Point selected by the customer in the ExSchedule system.
- For Day-ahead import (in-to PJM RTO) transactions using a Spot-In OASIS reservation, both the source and sink prices are based on the Import Pricing Point selected by the customer in the ExSchedule system.
- For Day-ahead import (in-to PJM RTO) transactions using an OASIS reservation (other than a Spot-In OASIS reservation) where the source and sink on the OASIS are the same, the source and sink price is assigned based on the Import Pricing Point selected by the customer in the ExSchedule system. Where the source and sink are not the same, the source price is based on the Import Pricing Point selected by the customer in the ExSchedule system, while the sink price is based on the sink of the OASIS reservation being used.
- For Day-ahead wheel (through PJM RTO) transactions, the source price is based on the Import Pricing Point selected by the customer in the ExSchedule system, while the sink price is based on the Export Pricing Point selected by the customer in the ExSchedule system.

2.3 Real-time Interface Pricing

The below provides guidance on the rules associated with real-time interface pricing.

- For Real-time export (out-of PJM RTO) transactions where the source and sink on the OASIS are the same, the source and sink price is assigned based on the sink of the NERC Tag and the applicable interface pricing mapping*. Where the source and sink on the OASIS are not the same, the source price is assigned based on the source of the OASIS reservation being used, while the sink price is based on the sink of the NERC Tag and the applicable interface pricing mapping*.
- For Real-time import (in-to PJM RTO) transactions using a Spot-In OASIS reservation, both the source and sink prices are based on the source of the NERC Tag and the applicable interface pricing mapping*.
- For Real-time import (in-to PJM RTO) transactions using an OASIS reservation (other than a Spot-In OASIS reservation) where the source and sink on the OASIS are the same, the source and sink price is assigned based on the source of the NERC tag and the applicable interface pricing mapping*. Where the source and sink are not the same, the source price

is based on the source of NERC tag and the applicable interface pricing mapping*, while the sink price is based on the sink of the OASIS reservation being used.

- For Real-time wheel (through PJM RTO) transactions, the source price is based on the source of the NERC tag and the applicable interface pricing mapping*, while the sink price is based on the sink of the NERC tag and the applicable interface pricing mapping*.

* The Pricing Point Guide which contains the complete listing of the Mapping of External Balancing Authorities to Interface Pricing Points can be found on the PJM website at http://www.pjm.com/markets-and-operations/etools/exschedule.aspx.

Section 3: Spot Market Energy Accounting

Welcome to the Spot Market Energy Accounting section of the ***PJM Manual for Operating Agreement Accounting***. In this section, you will find the following information:

- An overview of the spot market accounting (see “Spot Market Accounting Overview”).
- How PJM determines spot market energy position for each PJM Member (see “ Spot Market Energy”).
- How charges for spot market energy are calculated for Market Participants (see “Spot Market Energy Charges”).
- How spot market energy charge reconciliations are calculated (see “Reconciliation for Spot Market Energy Charges”).

3.1 Spot Market Accounting Overview

The PJM Energy Market is the regional competitive market that is administered by PJM for the purchase and sale of Spot Market energy. PJM Members buy and sell energy from the spot market based on metered and scheduled use. PJM schedules and dispatches resources on the basis of least-cost, security constrained dispatch and the bids and operating characteristics offered by the sellers into PJM. PJM dispatches resources to meet the PJM demand requirements, as well as the requirements for Ancillary Services.

PJM is responsible for administering the Day-ahead and Balancing PJM Energy Markets, including, performing the following accounting-related functions:

- accounting for transactions
- rendering bills to Market Participants
- receiving payments from and dispersing payments to Market Participants

The Spot Market facilitates the trading of energy by PJM Market Participants. The Spot Market clears at the appropriate Day-ahead System Energy Price component of LMP for every Day-ahead Settlement Interval (hourly interval) and at the appropriate Real-time System Energy Price component of LMP for every Real-time Settlement Interval (five minute interval). Energy delivered to the Spot Market is compensated at the applicable System Energy Price. Energy purchased from the Spot Market is charged at the applicable System Energy Price.

3.2 Business Rules for InSchedule and Power Meter Data Submissions

Unilateral Corrections to InSchedule Load Responsibility Data

- For load responsibility InSchedule data submitted by the LSE (as opposed to the typical EDC submittal), EDCs need more certainty of accurate and final data prior to the PJM

InSchedule data submission deadline in order for them to accurately calculate load responsibilities for all other LSEs in their territory by the InSchedule deadline.

- These LSEs must submit their data two hours prior to the established PJM InSchedule data submission deadlines.
- If this does not occur, EDCs shall be allowed to e-mail PJM with the LSE's load responsibility data (with a copy provided to the applicable LSE) so that PJM can enter that EDC-calculated data prior to the InSchedule data submission deadline as the official data to be used for settlements.
- Any discrepancies remaining after the InSchedule deadline may be resolved via the EDC load reconciliation data submissions.

Five Minute Revenue Meter Data Submissions into Power Meter

Generation resources that elect to submit five minute revenue meter data into Power Meter must adhere to the following process:

- Send an email to PJM Market Settlements at mrkt_settlement_ops@pjm.comat least three business days prior to the Operating Day that the five minute revenue meter data submissions are effective. The email must contain the following information:
  - Market Participant company name responsible for submitting the revenue meter data in Power Meter
  - Energy market owner(s) if different than the submitting Market Participant. PJM requires independent agreement of the change to five minute revenue meter data submissions by the Energy market owner(s) when different than the Market Participant responsible for submitting the meter data in Power Meter.
  - The effective Operating Day to begin five minute revenue meter data submissions
  - The meter account ID(s)
- If applicable, all meter account IDs associated with a specific Markets Gateway unit ID must switch to five minute revenue meter data on the same Operating Day.
- Upon verification, PJM will provide email notification to the applicable Market Participants that the generation resource is set up in Power Meter to submit five minute revenue meter data for the effective Operating Day.

Unilateral Corrections to Power Meter Generation Data

- For generation data submitted by the generation owner (as opposed to the EDC submittal), EDCs need more certainty of accurate and final Power Meter data prior to the PJM InSchedule data submission deadline in order for them to accurately calculate load responsibilities for all other LSEs in their territory by the InSchedule deadline.
- If gross data errors in the submitted data are identified by the EDC (and PJM concurs with the findings), EDCs shall be allowed to e-mail PJM with the correct generator data (with a copy provided to the applicable generation owner) so that PJM can enter that data prior to the Power Meter data submission deadline as the official data to be used for settlements.

- Any discrepancies remaining after the Power Meter deadline may be resolved via monthly Meter Error Correction data submissions.

3.3 Spot Market Energy

For each hourly interval, PJM calculates each Market Participant's day-ahead spot market energy position based on scheduled energy injections and withdrawals.

A Market Participant's Day-ahead spot market energy position is determined for each hourly interval and is equal to the sum of a Market Participant's demand and decrement bids cleared in the day-ahead market, less any accepted generation and increment offers cleared in the day-ahead market, and is adjusted for all day-ahead energy transactions in which the customer account is involved.

For each five minute interval, PJM calculates each Market Participant's real-time spot market energy position based on energy injections and withdrawals.

A Market Participant's Real-time spot market energy position is determined for each five minute interval and consists of a Market Participant's metered tie line flows (if applicable),less any ownership of metered generation, and is adjusted for all real-time energy transactions (including any load obligations [de-rated for transmission losses] or generation modeled by InSchedule transactions, and including any InSchedule transactions that were priced day-ahead) in which the customer account is involved.

3.4 Transmission Loss De-ration Factors

Because PJM employs a Marginal Loss methodology, energy market-related settlements need to use load responsibilities de-rated for transmission losses. This is due to the fact that the LMPs include a loss price component. In order to remove all applicable transmission losses, as represented in PJM's network system model, hourly fully metered EDC loss de-ration factors are applied to the total fully metered EDC load and to individual LSE load responsibilities. In general, these loss de-ration factors represent total transmission losses divided by total load including losses. (Note that these are different from traditional loss factors which reflect total losses divided by load excluding losses.)

Each hour, PJM calculates a loss de-ration factor for each EDC that has their tie lines fully metered directly to PJM. For non-PJM Mid-Atlantic fully metered EDCs (that do not receive an allocation of the jointly-owned PJM 500 kV transmission system losses), the calculation is as follows:

EDC total state-estimated Loss MWh / EDC total revenue-metered load MWh including all losses

For PJM Mid-Atlantic fully metered EDCs (that do receive an allocation of the jointly-owned PJM 500 kV transmission system losses), the calculation is as follows:

(EDC total state-estimated non-500kV Loss MWh + EDC revenue-metered 500kV Loss Allocation MWh) / (EDC total revenue-metered load MWh including all non-500kV losses + EDC revenue-metered 500kV Loss Allocation MWh)

These fully metered EDC hourly loss de-ration factors are applied to the LSE load responsibility InSchedule MWh quantities (which are inclusive of all losses) that are carved-out of the applicable fully metered EDC's total load, as well as applied to any residual load responsibility remaining with the fully metered EDCs, as follows:

Loss De-rated Load MWh = (1 – EDC Loss De-ration Factor) x InScheduled, or Revenue-Metered, Load Responsibility MWh

In the event that the EDC total state-estimator Loss MWh or the EDC total state-estimator non-500 kV Loss MWh is unavailable for an hour, PJM calculates the hourly value as the average of the value of the last available hours immediately before and after the impacted hour.

3.5 State-estimated vs. Revenue-metered Energy Quantities

Revenue Data for Settlements for generation resources are initially determined by the PJM State Estimator, however, final settlement values are determined as described in Section 1A of this PJM Manual.

The total load actually served at each load bus is initially determined by the State Estimator. For each Electric Distribution Company (EDC) that reports hourly net energy flows from all metered tie lines to PJM via Power Meter and revenue meter data for the net energy delivered by all generators within that EDC's territory via Power Meter, for the purpose of energy market accounting the EDC is classified as a fully metered EDC. The total fully metered EDC revenue-metered load is calculated as the sum of the net import energy flows reported by their tie revenue meters plus the net generation reported by the generator revenue meters. The amount of load at each of such fully metered EDC's load buses calculated by the PJM State Estimator is then adjusted, in proportion to its share of the total load of that fully metered EDC, in order that the total amount of load across all of the fully metered EDC's load buses matches its total revenue meter calculated load.

PJM will assess and trend quarterly the degree of net energy injections at load buses modeled in the PJM network system model (i.e., reverse power flows) in order to detect and correct any modeling issues and to identify any generation in excess of load that appears at a load bus. PJM will determine and use a relevant net energy injection threshold at a load bus that may impact LMP and/or load accuracy. For load buses with persistent negative MWh, PJM will work with the applicable EDC to determine if the cause is suboptimal modeling or actual reverse power flows from distribution-level system(s) to the PJM transmission system, or simply normal

results due to state estimation. Properly modeled load buses with consistent excess energy injections due to distribution-level reverse power flows should be modeled as generation buses in the PJM network system model at the load bus location in order to minimize the amount of negative MWh observed at those load buses.

3.6 Residual Metered Load

For settlements purposes, load within a fully metered EDC's territory is assigned to non-metered entities by submitting hourly load obligation data in the InSchedule system. Data submitted in the InSchedule system includes the names of the LSE responsible for serving the load and the EDC in whose territory the load is located, the number of megawatts of load assigned to the LSE for each hour, the aggregate at which load is to be priced, and the start and end dates for the load contract. During the settlements process, load assigned to an LSE at a specified aggregate is further assigned to individual load buses based on the aggregate definition, which specifies the percentage of the overall aggregate that each bus represents, to identify the LSE's hourly megawatts of load at each bus. Nodal priced load is defined as any hourly load submitted under an InSchedule contract that is priced at an aggregate comprised of a single identifiable bus or set of identifiable buses at which the load is located. A detailed description of the nodal pricing settlements business rules can be found in PJM Manual 27: Open Access Transmission Tariff Accounting, Sections 5.6 and 5.7. The hourly nodal load amounts submitted in InSchedule are multiplied by the nodal aggregates definitions to calculate the nodal priced load at each bus. Residual metered load at each bus is defined as the bus load (adjusted revenue meter calculated load as calculated in Section 3.5 of this PJM Manual) less the nodal priced load at each bus.

3.7 Residual Metered Load Aggregate Definitions

Residual Metered Load aggregates more accurately reflect the composition of non-nodal priced load in fully metered EDC territories. Residual Metered Load aggregates are the default for which real-time load is settled if it has not elected to settle at a nodal load aggregate.

Hourly Residual Metered Load aggregate distribution factors are determined by dividing the residual metered load for each bus in the fully metered EDC territory by the total residual metered load for the fully metered EDC territory. Residual Metered Load aggregate prices are defined by weighting each load bus LMP by that bus' residual metered load aggregate distribution factor. For the majority of PJM transmission zones, the fully metered EDC territory is the same as the physical transmission zone. In cases where the fully metered EDC's territory differs from the physical transmission zone, residual metered load aggregates exist for each fully metered EDC territory within the transmission zone. Residual Metered Load aggregate congestion prices, loss prices, and total LMPs are calculated using the Residual Metered Load aggregate distribution factors. Factors for each Residual Metered Load aggregate sum to exactly 100%.

Hourly Residual Metered Load aggregate definitions used for the calculation of Day-ahead LMPs, preliminary and final real-time LMPs, and FTRs/ARRs are defined as follows:

- Day-ahead Residual Metered Load aggregate distribution factors default to the final real-time distribution factors for the Residual Metered Load aggregate for each correpsonding hour of the Operating Day one week prior (i.e., if next operating hour is Monday at 8:00 a.m., the default distribution is from 8:00 a.m. on Monday of the previous week).
- Preliminary 5 minute real-time Residual Metered Load aggregate LMPs are calculated using the same Residual Metered Load aggregate distribution factors as used in the Day-ahead Energy Market for the Operating Day.
- Final hourly real-time Residual Metered Load aggregate distribution factors are calculated using InSchedule-submitted nodal load MWh.
- Residual Metered Load aggregate distribution factors for ARR/FTR purposes are fixed for the planning period (June 1st – May 31st). Consistent with physical transmission zones, the residual metered load aggregate distributions for FTRs/ARRs are initially determined using the hourly individual residual load bus contribution to the total residual load at the time of the previous year's PJM annual peak. Per the nodal pricing rules in PJM Manual 27: Open Access Transmission Tariff Accounting, Sections 5.6 and 5.7, where there are new nodal load requests, the initial residual metered load aggregate definition for FTRs/ARRs are adjusted by the LSE's nodal load peak distribution. LSEs moving to nodal load settlement for the upcoming PJM planning year will be required to submit a peak load at the time of the PJM annual peak from the previous year. This value in conjunction with the distribution percentages currently required according to the nodal pricing rules will be used to determine the final residual metered load aggregate distribution.

3.8 Spot Market Energy Charges

Market Participant customer accounts incur +/- charges for Day-ahead Spot Market Energy based on their day-ahead injections and withdrawals. For each hourly interval of the Operating Day, PJM calculates Day-ahead Spot Market Energy charges for each Market Participant by taking the difference between the sum of the Market Participant's scheduled energy withdrawals times the Day-ahead System Energy Price and the sum of the Market Participant's scheduled energy injections times the Day-ahead System Energy Price. If a Day-ahead Market Suspension occurs, the Day-ahead System Energy Price will be set to $0/MWh and Day-ahead energy withdrawals and Day-ahead energy injections will be set to 0 MWh for all hours of the Operating Day.

Market Participant customer accounts incur +/- charges for Balancing Spot Market Energy based on deviations between their real-time energy withdrawals and their day-ahead scheduled energy withdrawals and deviations between their real-time energy injections and their day-ahead scheduled energy injections.

PJM will take the hourly sum of each Market Participant's scheduled day-ahead energy withdrawals and flat-profile this value across each of the five minute intervals of the hour to obtain five minute interval day-ahead scheduled withdrawals. Day-ahead exports can be scheduled sub-hourly and are set equal to the MW value for each of the five minute intervals that the transaction is scheduled in the day-ahead energy market.

PJM will take the hourly sum of each Market Participant's scheduled day-ahead energy injections and flat-profile this value across each of the five minute intervals of the hour to obtain five minute interval day-ahead scheduled injections. Day-ahead imports can be scheduled sub hourly and are set equal to the MW value for each of the five minute intervals that the transaction is scheduled in the day-ahead energy market.

For each five minute interval of the Operating Day, PJM calculates Balancing Spot Market Energy charges for each Market Participant by:

- Taking the difference between the sum of the Market Participant's real-time five minute energy withdrawals and the day-ahead five minute scheduled energy withdrawals and multiplying this difference by the Real-time five minute System Energy Price divided by 12. This results in a five minute interval balancing withdrawal charge.
- Taking the difference between the sum of the Market Participant's real-time five minute energy injections and the day-ahead five minute scheduled energy injections and multiplying this difference by the five minute Real-time System Energy Price divided by 12. This results in a five minute interval balancing injection credit.
- Finally, taking the difference between the five minute interval balancing withdrawal charge and the five minute interval balancing injection credit.
- If a Real-time Market Suspension occurs, the Real-time five minute System Energy Price will be calculated per Manual 11, Section 2.21.

PJM Actions

- PJM accounting process retrieves the following information:
  - Each Market Participant's scheduled hourly day-ahead energy injections and energy withdrawals(MWh)
  - Sub-hourly day-ahead import and export schedules (MW)
  - Each Market Participant's five minute interval real-time energy injections and energy withdrawals (MW)
  - The hourly RTO system-wide Day-ahead System Energy Price ($/MWh)
  - The five minute RTO system-wide Real-time System Energy Price ($/MWh)
- PJM calculates the Day-ahead Spot Market Energy charge (positive or negative) for each hour for each Market Participant as:

$$Day-ahead\ Spot\ Market\ Energy\ Charge =$$

$$\left[\begin{array}{l}(Day - ahead\ Scheduled\ Energy\ Withdrawals) * \\ (Day - ahead\ System\ Energy\ Price)\end{array}\right]$$

$$-[(Day - ahead\ Scheduled\ Energy\ Injections)*(Day - ahead\ System\ Energy\ Price)]$$

- PJM calculates the Balancing Spot Market Energy charge (positive or negative) for each five minute interval for each Market Participant as:

Balancing Spot Market Energy Charge =

$$\left[\begin{array}{l}(Five\ minute\ Real - time\ withdrawals\ -\ Five\ minute\ Day - ahead\ scheduled\ withdrawals \\ ) \\ *\ (Five\ minute\ Real - time\ System\ Energy\ Price) \div 12\end{array}\right]$$

$$-[(Five\ minute\ Real - time\ injections - Five\ minute\ Day - ahead\ scheduled\ injections)$$
$$*(Five\ minute\ Real - time\ System\ Energy\ Price\ \div 12)]$$

3.9 Reconciliation for Spot Market Energy Charges

PJM will calculate reconciled Spot Market Energy charges for EDCs and Retail Load Aggregators (a.k.a. Electric Generation Suppliers) for past monthly billings on a two month lag. The reconciliation kWh data must be supplied to PJM by the EDCs no later than the last day of the billing month that is two months after the original billing month. For example, all reconciliation data for January must be submitted by March 31 at 23:59. The reconciliation kWh data represents the difference between the scheduled Retail Load Responsibility or Wholesale Load Responsibility InSchedule (in MWh) and the “actual” usage based on metered data. This hourly kWh data must be reported separately for each applicable InSchedule contract.

PJM calculates the Spot Market Energy charge reconciliations by multiplying the kWh data (de-rated for transmission losses) by the Real-time PJM System Energy Price for that hour. These charge reconciliations are then totaled for the month for each EDC or Retail Load Aggregator. Note that the reconciliation for Spot Market charges for a month may be either a positive or a negative value, and may even be such that the reconciled load responsibility MWh results in a negative load quantity.

3.10 Load Ratio Share

Each Market Participant that is a Load Serving Entity (LSE) has a Load Ratio Share of PJM’s total load. Most commonly used in settlement calculations is the hourly ratio share of real-time load (excluding transmission losses and net of operating Behind the Meter Generation, but not to be less than zero). This calculated ratio is then applied accordingly in each applicable billing statement line item.

Load Ratio Share = real-time Load (MWh) / Total PJM real-time Load (MWh)

Other ratio shares, such as transmission zone load ratio share and regulation obligation ratio share are calculated in accordance with the PJM Open Access Transmission Tariff rules for those billing line items.

Section 4: Regulation Accounting

Welcome to the Regulation Accounting section of the ***PJM Manual for Operating Agreement Accounting***. In this section, you will find the following information:

- A description of how Regulation is provided and accounted for in the PJM Regulation Markets (see "Regulation Accounting Overview").
- How credits are calculated for providers of Regulation (see "Regulation Credits").
- How charges are calculated for users of Regulation (see "Regulation Charges").
- How regulation charge reconciliations are calculated (see "Reconciliation for Regulation Charges").

4.1 Regulation Accounting Overview

Regulation is necessary to provide for the continuous balancing of resources (generation and interchange) with load and for maintaining scheduled Interconnection frequency at 60 cycles per second (60 Hz). PJM commits ~~on-line~~ resources whose output is raised or lowered as necessary to follow moment-to-moment changes in load. Effective on December 1, 2026, the Regulation Market consists of one control signal and two products: Regulation Up ("RegUp") and Regulation Down ("RegDn"), each with their own clearing megawatt requirement, procurement, clearing prices, and settlements. Regulation is predominantly achieved using automatic generation control equipment. Regulating resources include both generators and Economic Load Response Participant ~~R~~resources.

PJM operates the Regulation Market where the Regulation Market Clearing Prices for each product are determined based on Regulation offers and opportunity costs. PJM assigns the most economically efficient set of regulating resources available in real-time to separately meet the applicable NERC regions' regulation zone requirement~~s.~~for each of the products. For more detailed information about how Regulation Requirements are developed and how Regulation performance is scored~~is assigned~~, see PJM Manual 12: Balancing Operations. For an overview of the Regulation Market~~,~~ and how Regulation is assigned for each product, see PJM Manual 11: Energy & Ancillary Services Market Operations.

Resource owners supplying self-scheduled or pool-scheduled Reg~~ulation~~ Up or RegDn products are credited based on the product specific five~~-~~-minute Regulation Market Capability Clearing Price (RMCCP) and Regulation Market Mileage Clearing Price (RMMCP) for each MW of the Regulation product supplied, with consideration of the resource's product specific Regulation performance~~,~~ and, where applicable, the ratio between the product specific five~~-~~-minute actual requested mileage for the Regulation control signal and the product specific daily historic requested mileage for the Regulation control signal (mileage ratio). The daily historic requested mileage is a rolling 30-day average of PJM's product specific Regulation control signal movement.

~~Resource owners supplying pool-scheduled Regulation are credited for each Regulation MW at the higher of the five-minute total RMMCP and RMCCP, with consideration of the resource's Regulation performance, and where applicable the mileage ratio, or their five-minute Regulation offer price plus real-time opportunity costs including shoulder intervals' opportunity costs. Opportunity costs for Economic Load Response resources, regulation only resources, and self-scheduled resources are zero.~~

Resource owners supplying pool-scheduled RegUp and/or pool-scheduled RegDn, are paid an uplift credit referred to as a Lost Opportunity Cost credit if the resource's Regulation offers and opportunity costs, including shoulder intervals' opportunity costs, exceed the resources five-minute Regulation Clearing Price credits. Resources supplying self-scheduled RegUp and/or self-scheduled RegDn during a five-minute interval are not eligible for Lost Opportunity Cost credits.

Each Market Participant that is a Load Serving Entity (LSE) or Regulation buyer has an hourly product specific Regulation Obligation equal to their Load Ratio Share of the total amount of the product specific effective Regulation actually supplied. This obligation can be adjusted by product specific Regulation bilateral transactions. For information on Regulation bilateral transactions see PJM Manual 11: Energy & Ancillary Services Market Operations Section 3. ~~satisfied from their own resources capable of providing Regulation, by contractual arrangements with other Market Participants capable of providing Regulation, and/or by purchases of Regulation from the PJM Regulation Market.~~

Each Market Participant that is a Load Serving Entity (LSE) or Regulation buyer is charged an obligation ratio share of the total hourly product specific Regulation Market Capability Clearing Price (RMCCP) credits and Regulation Market Mileage Clearing Price (RMMCP) credits. Each Market Participant that is a Load Serving Entity (LSE) or Regulation buyer is charged a net purchase ratio share of the total Regulation Lost Opportunity Cost credits. ~~plus their percentage share of any Regulation provider's unrecovered costs over and above their total Regulation Clearing Price credits (Regulation Lost Opportunity Cost credits).~~

4.2 Regulation Credits

Regulation credits are paid to Market Participants for their resources that are assigned pool-scheduled Regulation or self-scheduled Regulation. PJM sums the five~~5~~-minute Regulation credits (both Regulation Clearing Price credits and Lost Opportunity Cost credits) to determine the total credit for each Regulation market participant. Regulation credits for joint-owned generators supplying Regulation are allocated to the owners based on their ownership shares.

4.2.1 Regulation Clearing Price Credit

Each resource supplying pool-scheduled or self-scheduled Reg~~ulation~~ Up is credited based on the five~~-~~-minute RegUp RMCCP and RegUp RMMCP with consideration of the resource's

Reg~~ulation~~ Up performance score~~,~~ and, where applicable, the RegUp mileage ratio. Each resource supplying pool-scheduled or self-scheduled RegDn is credited based on the five-minute RegDn RMCCP and RegDn RMMCP with consideration of the resource's RegDn performance score and, where applicable, the RegDn mileage ratio. Uplift credits referred to as Regulation Lost Opportunity Cost credits are described in Section 4.2.2 of this PJM Manual.

Any resource with a five~~-~~-minute RegUp performance score below 25% receives zero Reg~~ulation~~ Up clearing price credits for that five~~-~~-minute interval. Any resource with a five-minute RegDn performance score below 25% receives zero RegDn clearing price credits for that five-minute interval.

During a Market Suspension, if PJM is assigning Regulation, Regulation Clearing Price c~~C~~redits and Lost Opportunity Cost c~~C~~redits will be calculated using Regulation Clearing Prices calculated per Manual 11, Section 3.2.11. If the performance score cannot be calculated during a Market Suspension, the historic performance score by product type will be used for settlements during the Market Suspension period. If regulation mileage cannot be calculated during a Market Suspension, the mileage will be set to 1 for settlements during a Market Suspension period.

PJM Actions

- PJM retrieves the following information for the Regulation Clearing Price c~~C~~redit (further definitions of terms may be found in PJM Manual 11: Energy & Ancillary Services Market Operations or Operating Agreement of PJM Interconnection, L.L.C.):
  - RegUp Performance Score
  - RegDn Performance Score
  - Actual requested mileage for the Reg~~ulation~~ Up product~~control signal~~
  - Actual requested mileage for the RegDn product
  - Daily historic requested mileage for the Reg~~ulation~~ Up product~~control signal~~
  - Daily historic requested mileage for the RegDn product
  - PJM-Assigned/Pool-scheduled Reg~~ulation~~Up MW
  - PJM Assigned/Pool-scheduled RegDn MW
  - Self-scheduled Reg~~ulation~~ Up MW
  - Self-scheduled RegDn MW
  - RegUp Regulation Market Capability Clearing Price (RMCCP) ($/MWh)
  - RegDn Regulation Market Capability Clearing Price (RMCCP) ($/MWh)
  - RegUp Regulation Market Mileage Clearing Price (RMMCP) ($/MWh)
  - RegDn Regulation Market Mileage Clearing Price (RMMCP) ($/MWh)

- From the Regulation log, PJM identifies each resource that supplied Reg~~ulation~~ Up (both pool-scheduled and self-scheduled) with a five-minute RegUp performance score greater than or equal to 25%.
- From the Regulation log, PJM identifies each resource that supplied RegDn (both pool-scheduled and self-scheduled) with a five-minute RegDn performance score greater than or equal to 25%.
- PJM calculates the total Regulation Clearing Price c~~C~~redit as the RMCCP c~~C~~redit plus the RMMCP c~~C~~redit for each product and ~~five-~~5 minute interval.
  - *RegDn Clearing Price credit = RegDn RMCCP credit + RegDn RMMCP credit*
  - *Reg~~ulation~~ Up Clearing Price c~~C~~redit = RegUp RMCCP c~~C~~redit + RegUp RMMCP c~~C~~redit*
- PJM calculates the five-minute RMCCP c~~C~~redit by product for each applicable regulating resource by multiplying the product specific Regulation MWs for the five-minute interval by the product specific Regulation Market Capability Clearing Price (RMCCP) and the resource's actual product specific performance score for that five-minute interval. Regulation MWs that are assigned or are terminated within the five-minute interval are integrated based on the duration of minutes the Regulation assignment was effective during the five-minute interval. This result is then divided by 12 to determine the five-minute interval product specific RMCCP c~~C~~redit.
  - *RegUp RMCCP c~~C~~redit = Five-minute integrated Reg~~ulation~~ Up MW * Five-minute RegUp Performance Score * Five-minute RegUp RMCCP / 12~~)~~*
  - *RegDn RMCCP credit = Five-minute integrated RegDn MW * Five-minute RegDn Performance Score * Five-minute RegDn RMCCP / 12*
- PJM calculates the five-minute RMMCP c~~C~~redit by product for each applicable regulating resource by multiplying the product specific Regulation MWs for the five-minute interval by the product specific Regulation Market Mileage Clearing Price (RMMCP) for that five-minute interval, the product specific mileage ratio, and the resource's actual product specific performance score for that five-minute interval. Regulation MWs that are assigned or are terminated within the five-minute interval are integrated based on the duration of minutes the Regulation assignment was effective during the five-minute interval. The result is then divided by 12 to determine the five-minute interval product specific RMMCP c~~C~~redit
  - *RegUp Mileage Ratio = Five-minute actual requested mileage for the Reg~~ulation~~ Up product ~~control signal~~ / Daily historic requested mileage for the Reg~~ulation~~ Up product ~~control signal~~*
  - *RegUp RMMCP c~~C~~redit = Five-minute integrated Reg~~ulation~~Up MW * Five-minute RegUp Performance Score * RegUp Mileage Ratio * Five-minute RegUp RMMCP / 12*
  - *RegDn Mileage Ratio = Five-minute actual requested mileage for the RegDn product / Daily historic requested mileage for the RegDn product*

- *RegDn RMMCP credit = Five-minute integrated RegDn MW * Five-minute RegDn Performance Score * RegDn Mileage Ratio * Five-minute RegDn RMMCP / 12*

4.2.2 Regulation Lost Opportunity Cost Credit

~~Lost opportunity cost credits for Regulation are calculated for the Regulation intra-commitment intervals and shoulder intervals.~~ For resources supplying pool-scheduled Reg~~ulation~~Up and/or pool-scheduled RegDn, PJM sums the resource's Regulation offers and opportunity costs, including shoulder intervals' opportunity costs, and then compares the total ~~it~~ to its five-~~5~~-minute Reg~~ulation~~ Up and RegDn Clearing Price credits. If the resulting amount is positive, then uplift credits referred to as Lost Opportunity Cost credits are calculated, however, if the resulting amount is negative, then the Lost Opportunity Cost credit is $0. Resources supplying self-scheduled Regulation during a five-minute interval are not eligible for Lost Opportunity Cost credits. Resources supplying both self-scheduled Regulation and pool-scheduled Regulation in a five-minute interval are not eligible for Lost Opportunity Cost credits. ~~Opportunity costs for Economic Load Response resources and Regulation only resources are zero.~~

Resources with only a RegUp assignment and ~~Any resource~~ with a five-~~-~~minute RegUp actual performance score below 25% receive~~s~~ zero Regulation Lost Opportunity Cost c~~C~~redits for that five-~~-~~minute interval. Resources with only a RegDn assignment and a five-minute RegDn actual performance score below 25% receive zero Regulation Lost Opportunity Cost credits for that five-minute interval. Resources with a RegUp and a RegDn assignment and a five-minute weighted average actual performance score below 25% receive zero Regulation Lost Opportunity Cost credits for that five-minute interval.

Lost Opportunity Cost c~~C~~redit = Max {((Reg~~ulation~~ Up Offer + RegDn Offer + Performance Adjusted Intra-Commitment Opportunity Cost + Shoulder Interval Opportunity Cost) / 12) – (Reg~~ulation~~Up Clearing Price c~~C~~redit + RegDn Clearing Price credit) ,0}

Intra-commitment opportunity costs and shoulder interval opportunity costs for Economic Load Response Participant resources and regulation only resources are zero.

4.2.2.1 Intra-Commitment Opportunity Cost

~~The five minute opportunity costs calculated as part of the real-time pricing algorithm as adjusted by the applicable performance score are used in the settlement calculation for intra-commitment opportunity costs.~~

Regulation intra-commitment opportunity costs quantify the costs of providing Regulation instead of energy to ensure resources are indifferent to providing energy or the assigned ancillary service. This ensures that when PJM assigns a resource to provide Regulation, the resource will follow PJM dispatch and be capable of providing the Regulation needed. A single intra-commitment opportunity cost is calculated for each five-minute interval accounting for the

deviation in MW required to provide the pool-scheduled Regulation assignments during the five-minute interval (i.e., RegUp only, RegDn only, or both a RegUp and RegDn assignment).

In general, regulation intra-commitment opportunity costs for non-hydro resources represent either the foregone revenues when a resource's bias adjusted tracking regulation set point is lower than its tracking desired economic output level, as illustrated in Figure 1 below, or the increased costs incurred when a resource's bias adjusted tracking regulation set point is higher than its tracking desired economic output level, as illustrated in Figure 2 below.

Figure 1

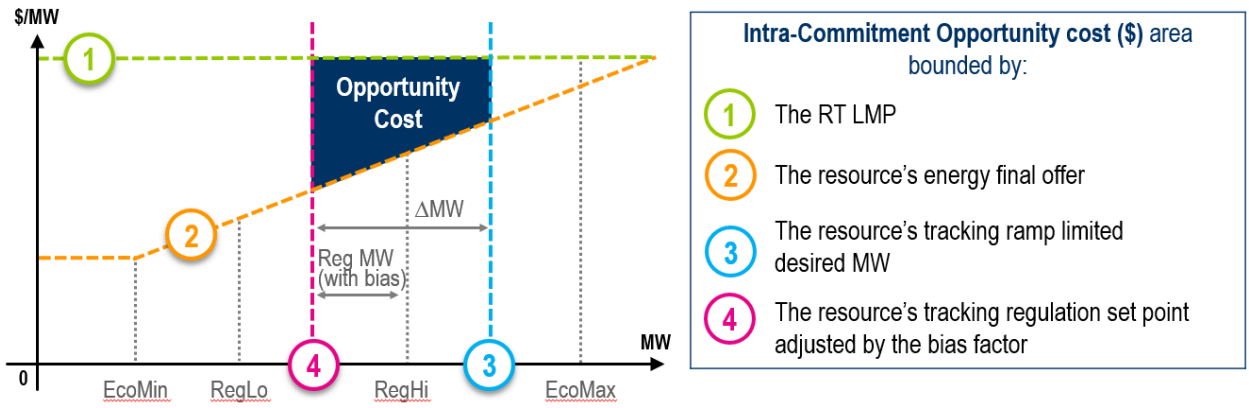

Figure 2

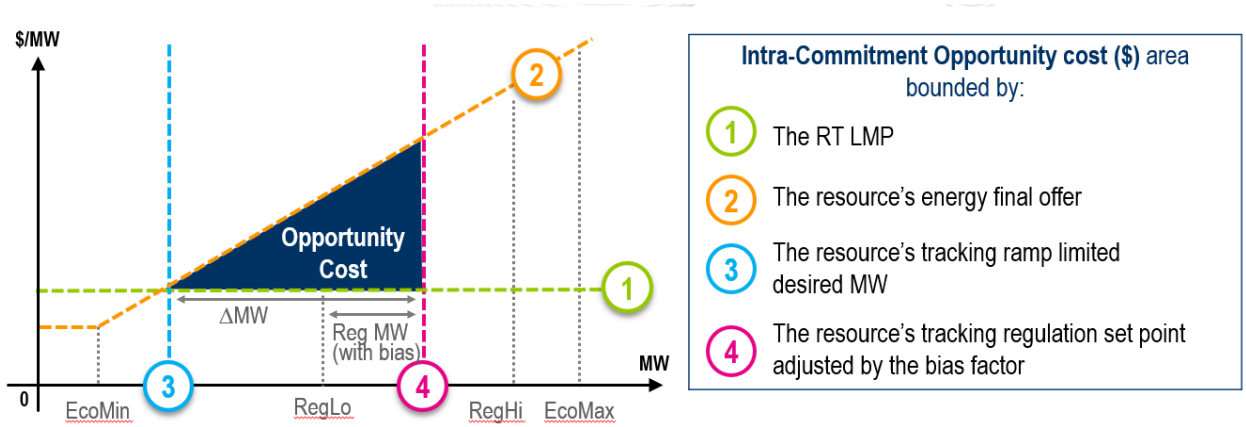

The bias adjusted tracking regulation set point accounts for the regulation signal's operational request for any further adjustments to the resource's energy output during the five-minute interval. The calculation of the bias adjusted tracking regulation set point considers whether the resource provided RegUp only, RegDn only, or both RegUp and RegDn.

- For resources with only a RegUp pool-scheduled assignment, the bias adjusted tracking regulation set point = tracking regulation set point + (RegUp MW Assignment * RegUp bias factor) where the RegUp bias factor is a value between 0 and 1.
- For resources with only a RegDn pool-scheduled assignment, the bias adjusted tracking regulation set point = tracking regulation set point + (RegDn MW Assignment * RegDn bias factor) where the RegDn bias factor is a value between -1 and 0.
- For resources with a RegDn pool-scheduled assignment and a RegUp pool-scheduled assignment, the bias adjusted tracking regulation set point is calculated as follows:
  - If the bidirectional bias factor > 0, the bias adjusted tracking regulation set point = tracking regulation set point + (RegUp MW Assignment * bidirectional bias factor)
  - If the bidirectional bias factor <= 0, the bias adjusted tracking regulation set point = tracking regulation set point + (RegDn MW Assignment * bidirectional bias factor)

The intra-commitment opportunity cost for non-hydro resources equals the area bounded by the five-minute interval real-time LMP, the five-minute interval Final Offer, the five-minute interval Tracking Ramp-Limited Desired MW (capped at the stability limit in effect), and the bias adjusted tracking regulation set point. When a generator must reduce its output from its Tracking Ramp-Limited Desired MW to provide Regulation, the intra-commitment opportunity costs equal any foregone profits associated with the MW reduction as illustrated in Figure 1 above.

When a generator must increase its output from its Tracking Ramp-Limited Desired MW to provide Regulation, intra-commitment opportunity costs equal any net costs incurred as a result of the increase in MW as illustrated in Figure 2 above. If a resource's pool-scheduled assignments start or terminate within the five-minute interval and are not effective for the entire five-minute interval, the bias adjusted tracking regulation set point and resulting opportunity cost are calculated for each unique combination of pool-scheduled assignments and integrated for the five-minute interval based on the duration of minutes within the interval that the assignments are effective.The total intra-commitment opportunity cost for the five-minute interval equals the sum of the integrated opportunity costs.

Hydro Units

Since hydro units operate on a schedule and do not have an energy bid, intra-commitment opportunity costs for these units are calculated using the average of the real-time LMP at the

hydro unit bus for the appropriate on peak (0700 - 2259) or off-peak (0000 – 0659, 2300 - 2359) period, excluding those hours during which all available units at the hydro plant were operating.

Hydro Deviation MW

The intra-commitment hydro opportunity cost considers whether the resource provided RegUp only, RegDn only, or both RegUp and RegDn products in order to calculate the bias adjusted hydro deviation MW. The bias adjusted deviation MW accounts for the regulation signal's operational request for any further adjustments to the resource's energy output during the five-minute interval.

- The deviation MW for hydro resources with only a RegUp assignment reflects the set point required in order to provide the RegUp assignment and the RegUp requested during the five-minute interval. The RegUp bias factor is a value between 0 and 1.
  - RegUp only deviation MW = RegUp MW Assignment * (1 - RegUp bias factor)
- The deviation MW for hydro resources with only a RegDn assignment reflect the RegDn requested during the five-minute interval. The RegDn bias factor is a value between 0 and -1.
  - RegDn only deviation MW = ABS (RegDn MW Assignment * RegDn bias factor)
- The deviation MW for hydro resources with both a RegUp assignment and RegDn assignment reflect the set point required to provide the RegUp assignment and the RegUp or RegDn requested during the five-minute interval using the bidirectional bias factor. The bidirectional bias factor is a value between -1 and 1.
  - RegUp and RegDn deviation MW = RegUp MW Assignment * (1 - bidirectional bias factor) if the bidirectional bias factor is greater than or equal to 0.
  - RegUp and RegDn deviation MW = RegUp MW Assignment + (RegDn MW Assignment * ABS(bidirectional bias factor)) if the bidirectional bias factor is less than 0.

Hydro Intra-Commitment Opportunity Cost

If a hydro unit~~s~~ is in spill during a five-~~-~~minute interval, the average ~~of the~~ real-time LMP value is set to zero such that the opportunity cost = the applicable deviation MW * five-minute real-time LMP at the generator pnode.~~is equal to (i) the deviation of the five minute Regulation setpoint that is required to provide Regulation from the resource's expected output, represented as the Regulation Assignment (biased to reflect the actual Regulation signal and adjusted by the applicable five minute performance score) multiplied by (ii) the full value of the five minute real-time LMP at the generator bus.~~

If a hydro unit is committed day-ahead with MW greater than zero and is not in spill, the opportunity cost = ~~is equal to (i)~~ the applicable deviation MW * Max (five-minute real-time LMP

at the generator pnode - average real-time LMP, 0). ~~of the five minute Regulation setpoint that is required to provide Regulation from the resource's expected output, represented as the Regulation Assignment (biased to reflect the actual Regulation signal and adjusted by the applicable five minute performance score) multiplied by (ii) the difference between the five minute real-time LMP at the generator bus and the average real-time LMP (calculated as stated above).~~ If this average real-time LMP value is higher than the five-~~-~~minute real-time LMP at the generator bus, the opportunity cost is zero.

If a hydro unit is not committed day-ahead with MW greater than zero and is not in spill, the opportunity cost = ~~is equal to (i)~~ the applicable deviation MW * Max (average real-time LMP - five-minute real-time LMP at the generator pnode, 0). ~~of the five minute Regulation setpoint that is required to provide Regulation from the resource's expected output, represented as the Regulation Assignment (biased to reflect the actual Regulation signal and adjusted by the applicable five minute performance score) multiplied by (ii) the difference between the average real-time LMP (calculated as stated above) minus the five minute real-time LMP at the generator bus.~~ If the ~~actual~~ five-~~-~~minute real-time LMP is higher than the average real-time LMP, the opportunity cost is zero.

Additional details on hydro units in the Regulation Market can be found in PJM Manual 11: Energy & Ancillary Services Market Operations.

Performance Adjusted Intra-Commitment Opportunity Cost

The performance adjusted intra-commitment opportunity cost for hydro and non-hydro resources is determined for each five-minute interval.

- For resources with only a RegUp pool-scheduled assignment, the five-minute performance adjusted intra-commitment opportunity cost = intra-commitment opportunity cost * five-minute RegUp actual performance score.
- For resources with only a RegDn pool-scheduled assignment, the five-minute performance adjusted intra-commitment opportunity cost = intra-commitment opportunity cost * five-minute RegDn actual performance score.
- For resources with both a RegUp pool-scheduled assignment and a RegDn pool-scheduled assignment, the five-minute performance adjusted intra-commitment opportunity cost = intra-commitment opportunity cost * five-minute weighted average actual performance score.
    - Weighted average performance score = RegUp actual performance score * (RegUp pool-scheduled assignment / Total pool-scheduled assignments) + RegDn actual performance score * (RegDn pool-scheduled assignment / Total pool-scheduled assignments)

4.2.2.2 Shoulder Interval Opportunity Cost

Opportunity Costs are calculated for the eligible two five-~~5-~~minute intervals preceding the Regulation commitment. These intervals are referred to as the ramp-in intervals. Opportunity costs from the ramp-in five-~~5-~~minute intervals are applied to the first five-~~5-~~minute interval of the Regulation commitment. Opportunity Costs are calculated for the eligible two five-~~5-~~minute intervals following the Regulation commitment. These intervals are referred to as the ramp-out intervals. Opportunity costs from the ramp-out five-~~5-~~minute intervals are applied to the last five-~~5-~~minute interval of the Regulation commitment.

CT[1] , hybrid, solar, wind, storage/ESR, diesel, nuclear, and hydro generators are not eligible for shoulder interval opportunity costs.

Ramp-in opportunity cost generator eligibility is determined for each of the two ramp-in five-minute intervals if all of the following conditions are met:

- it is online in all of the ramp-in five-~~-~~minute intervals;
- the Regulation assignment starts at the top of the hour (HH:00~~00~~ - HH:05) or bottom of the hour (HH:30 - HH:35);
- it is not regulating in all of the ramp-in five-~~-~~minute intervals;
- the Tracking Ramp-Limited Desired from the ramp-in five-~~-~~minute interval is not already within the regulation limits from the first five-~~-~~minute interval of the Regulation commitment.

Shoulder ramp-in opportunity costs are calculated when a generator must reduce its output from its economically desired level in order to provide Regulation at the start of the Regulation commitment, and this action results in forgone profits in the eligible ramp-in intervals. The ramp-in interval opportunity cost equals the area bounded by the ramp-in interval real-time LMP, the ramp-in interval Final Offer, the ramp-in interval Tracking Ramp-Limited Desired MW (capped at the stability limit in effect), and the tracking Regulation set point from the first interval of the Regulation commitment. See Figure 1 below.

Shoulder ramp-in opportunity costs are calculated when a generator must increase its output from its economically desired level in order to provide Regulation at the start of the Regulation commitment, and this action results in additional costs incurred in the eligible ramp-in intervals. The ramp-in interval opportunity cost equals the area bounded by the ramp-in interval Final Offer, the ramp-in interval real-time LMP, the tracking Regulation set point from the first interval of the Regulation commitment, and the ramp-in interval Tracking Ramp-Limited Desired MW (capped at the stability limit in effect). See Figure 2 below.

Ramp-out opportunity cost generator eligibility is determined for each of the two ramp-out five-minute intervals if all of the following conditions are met:

- it is online in all of the ramp-out five-~~-~~minute intervals;

[1] Unless otherwise specified, diesel unit types are treated as CTs in settlements based on their similar operating characteristics.

- the Regulation commitment ends at the top of the following hour (HH:55 - HHnext:00) or bottom of the hour (HH:25 - HH:30);
- it is not regulating in all of the ramp-out five-minute intervals;
- the Tracking Ramp-Limited Desired from the ramp-out five-minute interval is not already within the Regulation limits from the last five-minute interval of the Regulation commitment.

Following a Regulation commitment, when a generator must reduce its output in order to follow its economic desired level resulting in additional costs incurred in the ramp-out intervals, shoulder opportunity costs in the form of a make-whole are calculated for the eligible intervals. The ramp-out interval opportunity cost equals the area bounded by the ramp-out interval Final Offer, ramp-out interval real-time LMP, the tracking Regulation set point from the last interval of the Regulation commitment, and the ramp-out interval Tracking Ramp-Limited Desired MW (capped at the stability limit in effect). See Figure 1 below.

Following a Regulation commitment, when a generator must increase its output in order to follow its economic desired level resulting in forgone revenues in the ramp-out intervals, shoulder opportunity costs are calculated for eligible intervals. The ramp-out interval opportunity cost equals the area bounded by the ramp-out interval real-time LMP, the ramp-out interval Final Offer, the ramp-out interval Tracking Ramp-Limited Desired MW (capped at the stability limit in effect), and the tracking Regulation set point from the last interval of the Regulation commitment. See Figure 2 below.

~~The Regulation set point is calculated for the applicable five minute interval the unit regulated as follows:~~

~~Regulation set point = Regulation Minimum MW + Regulation assigned MW, if the Tracking Ramp-Limited Desired MW <= Regulation Minimum MW~~

~~Regulation set point = Regulation Maximum MW - Regulation assigned MW, if the Tracking Ramp-Limited Desired MW >= Regulation Maximum MW~~

~~In the event that the Regulation Maximum and Regulation Minimum are not the most restrictive limits for a resource, the set point calculation will utilize the most restrictive minimum and maximum of all applicable limits in real-time. If the Regulation Minimum is less than the Economic Minimum, the Economic Minimum is used in the determination of the Regulation set point. If the Regulation Maximum is zero or greater than the Economic Maximum, the Economic Maximum is used in the determination of the Regulation set point.~~

*The Ffinal Ooffer referenced is the generator's incremental energy offer curve that is associated with the price-based or cost-based schedule used in the real-time dispatch of the unit.

Figure 1:

The following illustrates the opportunity cost calculated for forgone profits in the ramp-in or ramp-out shoulder intervals.

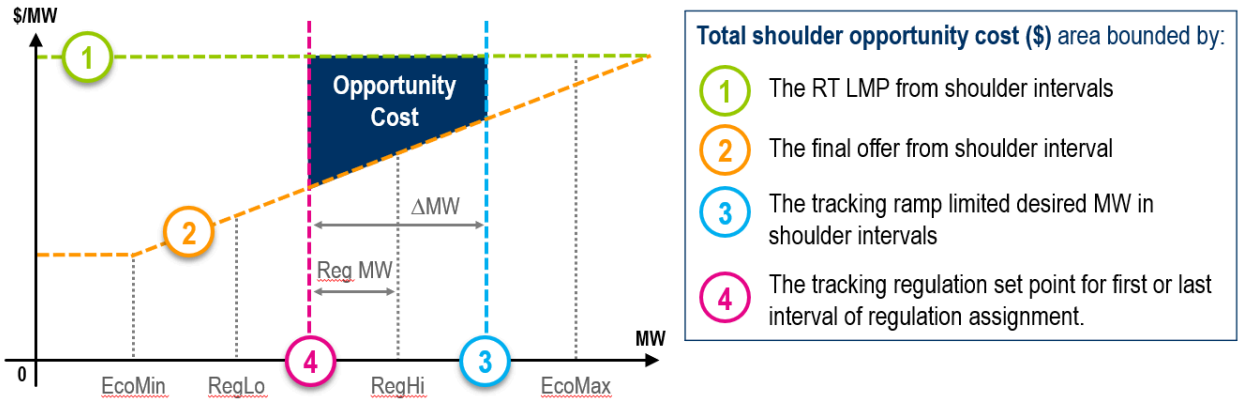

Figure 2:

The following illustrates the opportunity cost calculated for additional costs incurred in the ramp-in or ramp-out shoulder intervals.

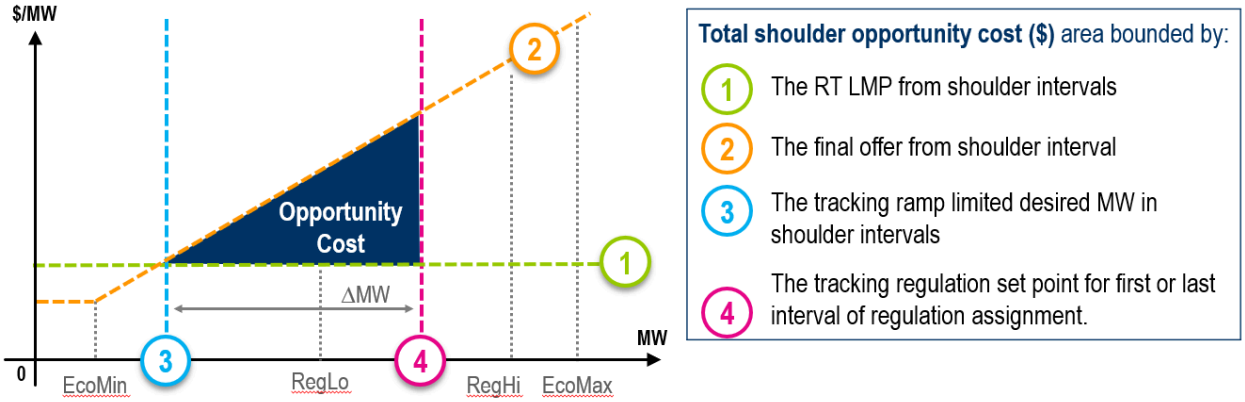

4.3 Regulation Charges

Each Market Participant that is a Load Serving Entity (LSE) or other Regulation buyer, is charged an hourly Regulation Obligation Share of the total hourly product specific Regulation Market Capability Clearing Price (RMCCP) credits, product specific Regulation Market Mileage Clearing Price (RMMCP) credits and Lost Opportunity Cost credits.

PJM sums the Regulation charges (both Regulation Clearing Price charges and Lost Opportunity charges) to determine the total hourly charge for each Regulation M~~m~~arket P~~p~~articipant.

4.3.1 Regulation Obligation

PJM calculates a Market Participant's hourly Regulation Obligation separately by product type. The hourly Regulation Obligation is equal to the Market Participant's Load Ratio Share, as calculated per Section 3.10, of the total amount of the product specific Regulation effective MW. The hourly product specific Regulation Obligation is further adjusted by any product specific Regulation bilateral transactions.

- RegUp Obligation = Load Ratio Share * Total Effective RegUp MW
  - The total effective RegUp MW is the hourly integrated sum of the five-minute interval RegUp MW assignment multiplied by the actual performance score for all pool-scheduled and self-scheduled resources.
- RegUp Adjusted Obligation = RegUp Obligation - RegUp MW Purchased + RegUp MW Sold
- RegDn Obligation = Load Ratio Share * Total Effective RegDn MW
  - The total effective RegDn MW is the hourly integrated sum of the five-minute interval RegDn MW assignment multiplied by the actual performance score for all pool-scheduled and self-scheduled resources.
- RegDn Adjusted Obligation = RegDnObligation - RegDn MW Purchased + RegDn MW Sold

4.3.2~~1~~ Regulation Clearing Price Charge

PJM calculates the hourly charge separately by product type for RMCCP charges and RMMCP charges. ~~The hourly Regulation Obligation equal the Load Serving Entity's or Regulation buyer's Load Ratio Share of the total amount of Regulation supplied excluding the mileage ratio component that hour and adjusted for any bilateral Regulation transactions.~~

PJM Actions

- PJM retrieves the following information for the Regulation Clearing Price c~~C~~harge:
  - Market Participant's RegUp Adjusted Obligation~~Load Ratio Share~~

- Market Participant's RegDn Adjusted ObligationBilateral Regulation transactions (sales and purchases) (MW)
- RegUp Regulation Market Capability Clearing Price (RMCCP) credit ($)
- RegDn Regulation Market Capability Clearing Price (RMCCP) credit ($)
- RegUp Regulation Market Mileage Clearing Price (RMMCP) credit ($)
- RegDn Regulation Market Mileage Clearing Price (RMMCP) credit ($)

- PJM determines each Load Serving Entity's (LSE's) or Regulation buyer's applicable hourly Regulation Obligation Share by product type based on their Load Ratio Share.
  - *RegulationUp Obligation Share = Adjusted Regulation Up Adjusted Obligation / Total PJM Adjusted Regulation Up Adjusted Obligation*
  - *Adjusted Regulation Obligation = Regulation Obligation - Regulation MW Purchased + Regulation MW Sold*
  - *Regulation Obligation = Load Ratio Share * Total Regulation Supplied (excluding mileage)*
  - Total Regulation Supplied (excluding mileage) is calculated for both pool-scheduled and self-scheduled resources by summing the 5-minute intervals Regulation MW multiplied by the Performance Score for all eligible resources integrated for an hour
  - *RegDn Obligation Share = RegDn Adjusted Obligation / Total PJM RegDn Adjusted Obligation*

- PJM calculates the Regulation Market Capability Clearing Price (RMCCP) cCharge by product type for each Market Participant by multiplying their product specific Regulation Obligation Share for the hour by the total product specific Regulation Market Capability Clearing Price (RMCCP) credits for that hour.
  - *Regulation Up RMCCP Capability Clearing Price cCharge = Regulation Up Obligation Share * Total RegUp RMCCP cCredits*
  - *RegDn RMCCP charge = RegDn Obligation Share * Total RegDn RMCCP credits*
- PJM calculates the Regulation Market Mileage Clearing Price (RMMCP) cCharge by product type for each Market Participant by multiplying their product specific Regulation Obligation Share for the hour by the total product specific Regulation Market Mileage Clearing Price (RMMCP) credits for that hour.
  - *Regulation Up RMMCP Mileage Clearing Price cCharge = RegUpulation Obligation Share * Total RegUp RMMCP cCredits*
  - *RegDn RMMCP charge = RegDn Obligation Share * Total RegDn RMMCP credits*

4.3.32 Regulation Lost Opportunity Cost Charge

In addition to the Regulation Clearing Price charges, PJM also calculates charges to Market Participants for their share of uplift~~lost opportunity~~ costs. Market Participants that are considered Net Regulation Purchasers are charged a proportionate share of any uplift credits, referred to as L~~l~~ost O~~o~~pportunity C~~c~~ost credits, paid to regulating resources~~generators~~ for unrecovered costs over and above their Regulation Clearing Price credits.

If any L~~l~~ost O~~o~~pportunity C~~c~~ost credits due to regulating were credited to Regulation providers, each Regulation market buyer is allocated a share of the hourly costs based on the amount of Regulation they purchased from the market that hour.

PJM Actions

- PJM retrieves the following information for the Regulation Lost Opportunity Cost c~~C~~harge:
  - Market Participant's RegUp Adjusted Obligation~~Load Ratio Share~~
  - Market Participant's RegDn Adjusted Obligation~~Bilateral Regulation transactions (sales and purchases) (MW)~~
  - Regulation Lost Opportunity Cost credits ($)
  - Self-scheduled Reg~~ulation~~ Up (MW)
  - Self-scheduled RegDn (MW)
- PJM calculates the hourly Regulation Lost Opportunity Cost c~~C~~harge by taking the product of the Total Regulation Lost Opportunity Cost c~~C~~redits and ~~Net~~ RegUp~~ulation~~ Purchases plus RegDn Purchases and dividing it by the Total PJM RegUp~~ulation~~ and RegDn Purchases
  - *Regulation Lost Opportunity Cost c~~C~~harge = (Total Regulation Lost Opportunity Cost c~~C~~redits * ~~Net~~ (Reg~~ulation~~ Up Purchase + RegDn Purchase)) / Total PJM ~~Net~~ Reg~~ulation~~ Up and RegDn Purchases*
- PJM calculates each Market Participant's hourly ~~Net~~ Regulation Purchase by product type by subtracting the amount of product specific self-scheduled regulation MW provided from their product specific Adjusted Obligation
  - *~~Net~~ Reg~~ulation~~ Up Purchase = ~~Adjusted~~ Reg~~ulation~~ Up Adjusted Obligation – Self s~~S~~cheduled R~~r~~eg~~ulation~~ Up MW*
  - ~~*Adjusted Regulation Obligation = Regulation Obligation - Regulation MW Purchased + Regulation MW Sold*~~
  - ~~*Regulation Obligation = Load Ratio Share * Total Regulation Supplied (excluding mileage)*~~
  - ~~*Total Regulation Supplied (excluding mileage) is calculated for both pool-scheduled and self-scheduled resources by summing the 5-minute intervals Regulation MW multiplied by the Performance Score for all eligible resources integrated for an hour*~~
  - *RegDn Purchase = RegDn Adjusted Obligation - Self-scheduled RegDn MW*

4.4 Reconciliation for Regulation Charges

PJM will calculate reconciled Regulation charges for EDCs and Retail Load Aggregators (a.k.a. Electric Generation Suppliers) for past monthly billings on a two month lag that were based on Load Ratio Shares. The reconciliation kWh data must be supplied to PJM by the EDCs no later than the last day of the billing month that is two months after the original billing month. For example, all reconciliation data for January must be submitted by March 31 at 23:59. The reconciliation kWh data represents the difference between the scheduled Retail Load Responsibility or Wholesale Load Responsibility InSchedule and the “actual” usage based on metered data. This hourly kWh data must be reported separately for each applicable InSchedule contract.

PJM calculates the Regulation charge reconciliations by multiplying the kWh data (de-rated for transmission losses) by the Regulation billing determinant for that hour. The hourly Regulation charge billing determinant (in $/MWh) is calculated by dividing the total hourly Regulation charges by the total real-time PJM load (de-rated for transmission losses) for ~~in~~ that hour. These charge reconciliations are then totaled for the month for each EDC or Retail Load Aggregator. Note that the reconciliation for Regulation charges for a month may be either a positive or a negative value, and may even be such that the reconciled load responsibility MWh results in a negative load quantity.

Section 5: Operating Reserve Accounting

Welcome to the Operating Reserve Accounting section of the ***PJM Manual for Operating Agreement Accounting***. In this section, you will find the following information:

- A description of how Operating Reserve is provided and accounted for in the Day-ahead and Balancing PJM Energy Markets (see “Operating Reserve Accounting Overview”).
- How day-ahead and balancing credits are calculated for providers of pool-scheduled Operating Reserve (see “Credits for Operating Reserve”).
- How the total pool cost of day-ahead and balancing Operating Reserve, Synchronous Condensing, and Reactive Services are allocated (see “Charges for Operating Reserve”).

5.1 Operating Reserve Accounting Overview

Accounting for Operating Reserve is performed on a daily basis. A pool-scheduled resource of a PJM Member is eligible to receive credits for providing Operating Reserve in the day-ahead market and, provided that the resource was available for the entire time specified in its offer data, in the balancing market. The total resource offer amount for generation, including startup and no-load costs as applicable, is compared to its total energy market value for specified operating period segments during the day (including any amounts credited for synchronized reserve in excess of the synchronized reserve offer plus opportunity cost, any amounts credited for non-synchronized reserve in excess of the opportunity cost, any amounts credited for secondary reserve in excess of the opportunity cost, any amounts credited for resources providing reactive services and any amounts attributed to the Market Revenue Neutrality Offset). If the total value is less than the offer amount, the difference is credited to the PJM Member.

Credits are also provided for pool-scheduled energy transactions, for dispatchable economic load reduction resources, for generating units operating as synchronous condensers (not for synchronized reserve nor for reactive services) at the direction of PJM, for cancellation of pool-scheduled resources, for units whose output is suspended or reduced due to a transmission constraint or other reliability reason, for units performing an annual black start test, for units providing reactive services at the direction of PJM, and for pool-scheduled and dispatchable self-scheduled resources eligible for dispatch differential lost opportunity cost credits. Nuclear Units are excluded from eligibility for Operating Reserve credits except in cases where PJM requests that nuclear units reduce output at PJM’s direction or where a physical problem at a nuclear unit requires a risk premium and that risk premium is submitted to and accepted by the MMU. Other specific circumstances will be evaluated on a case-by-case basis by PJM and MMU.

Market power mitigation and offer capping rules are detailed in PJM Manual 11: Energy & Ancillary Services Market Operations, Section 2.3.6.1.

The total cost of Day-ahead Operating Reserve for the Operating Day, excluding the total cost for resources scheduled to provide Black Start Service, Reactive Services or transfer interface control, is allocated and charged to PJM Members in proportion to their total cleared day-ahead demand, decrement bids, and up-to congestion transactions at the sink end of the transaction plus their cleared day-ahead exports for that Operating Day. The total cost of Balancing Operating Reserve for the Operating Day, excluding the total cost associated with scheduling units for Black Start service or testing of Black Start units, is allocated and charged to PJM Members in proportion to their locational real-time deviations from day-ahead schedules and generating resource deviations during that Operating Day, or to PJM Members in proportion to their real-time load plus exports during that Operating day for generator credits provided for reliability. In order to determine the reason why the Operating Reserve credit has been earned so that the charges related can be properly allocated, PJM conducts a Balancing Operating Reserve Cost Analysis (BORCA). PJM also calculates a Regional Balancing Operating Reserve rate for the costs of Operating Reserves that result from actions to control transmission constraints that are solely within pre-defined regions in the RTO. Additional costs of Operating Reserves that result from actions to control transmission constraints that benefit the entire RTO will continue to be allocated equally to deviations across the entire RTO. A detailed description of the Regional Balancing Operating Reserve Cost Analysis (BORCA) analysis can be found in Manual 11: Energy & Ancillary Services Market Operations. The total cost of synchronous condenser payments (other than that for synchronized reserve or reactive services) for the Operating Day is allocated and charged to PJM Members in proportion to their total real-time load plus their exports during that Operating Day. The total cost of Reactive Services for the Operating Day is allocated and charged to PJM Members in proportion to their total real-time load in the applicable transmission zone. The total cost of Day-ahead Operating Reserve for the Operating Day for resources scheduled to provide Reactive Services or transfer interface control because the resource is known or expected to be needed to maintain system reliability in a zone(s) is allocated and charged to PJM Members in proportion to their total real-time load in the applicable transmission zone(s). The total cost of Operating Reserves for resources providing Black Start service or testing of Black Start units is allocated to Network and Point-to-Point Transmission Customers based on their monthly transmission use on a megawatt basis. Additional details on this allocation can be found in PJM Manual 27: Open Access Transmission Tariff Accounting, Section 7.

5.2 Credit for Operating Reserve

Credits for Operating Reserve are calculated for each of the following situations:

- pool-scheduled generating resources (day-ahead and balancing markets)
- pool-scheduled energy transactions (day-ahead and balancing markets)
- synchronous condensing for purposes other than providing synchronized reserve or Reactive Services (balancing market)
- canceled pool-scheduled resources (balancing market)

- resources reduced or suspended due to a transmission constraint or for other reliability purposes (balancing market)
- resources performing annual scheduled black start tests (balancing market)
- Generation Capacity Resources performing Operational Testing (balancing market). Resources are not eligible to be made whole for a PJM initiated retest following a failed initial test.
- resources scheduled to provide Black Start service (day-ahead and balancing market)
- resources providing Reactive Services, including synchronous condensing to main reactive reliability
- pool-scheduled and dispatchable self-scheduled resources eligible for dispatch differential lost opportunity cost credits (balancing market)
- dispatchable economic load reduction resources that follow dispatch (day-ahead and balancing markets). See Section 11 for details on Load Response Operating Reserves Credits and Charges.
- For the credit calculations in this Section 5.2, if a Day-ahead Market Suspension occurs Day-ahead LMPs will be $0/MWh and cleared quantities will be 0 MWh. If a Real-time Market Suspension occurs, Real-time LMPs will be calculated per the business rules in Manual 11, Section 2.21. During a Real-time Market Suspension greater than 24 consecutive hours, the applicable cost offer will be used for all compensation.

5.2.1 Credits for Pool-Scheduled Generating Resources

At the end of each Operating Day, PJM calculates the credits due each PJM Member for pool-scheduled generating resources.

PJM Actions

- PJM retrieves the following information:
  - dispatcher generation scheduling and operations logs
  - resource offer data
    - the resource's Final Offer, which is the offer on which the resource was dispatched by the Office of the Interconnection for a particular clock hour for the Operating Day
    - the resource's Committed Offer. For pool scheduled resources, the Committed Offer is the offer on which the resource was scheduled by the Office of the Interconnection for a particular clock hour of the Operating Day. For self-scheduled resources, the Committed Offer is either the offer on which the Market Seller has elected to schedule the resource or the applicable offer based on a) any offer price capping or b) parameter limited schedule restrictions for the particular clock hour of the Operating Day.
  - hourly scheduled MWh for generation offers cleared in day-ahead market

  - five minute revenue meter generation MW values from PJM Power Meter if available
  - Five minute state estimator or telemetry generation MW, scaled to match hourly revenue meter generation MWh from PJM Power Meter as described in Section 1A of this PJM Manual
  - hourly scheduled MWh for InSchedule “Generation” contracts, if applicable
  - five minute interval generator dispatch rates, dispatch signal MW, and ramp-limited desired MW
  - generator hourly day-ahead LMPs
  - five minute real-time LMPs
- PJM calculates the resource’s hourly day-ahead offer amount based on its day-ahead Committed Offer and its cleared day-ahead Scheduled MWh for that hour.
- PJM accounting process applies the startup and hourly no-load bids if the start-up and no-load switch is set in the resource offer data and if the start-up bid is applicable for the MWh and status of the resource.
- Day-ahead credits for startup reflect the appropriate hot, intermediate, or cold state of the resource as it was scheduled in the day-ahead market.
- PJM calculates the resource’s hourly day-ahead energy market value as:

*Scheduled MWh * Day ahead LMP*

- PJM calculates the daily Day-ahead Operating Reserve credits for each resource as follows:
  - Sum hourly day-ahead offer amounts, including applicable no-load and startup costs, for the day
  - Sum hourly day-ahead energy market values for the day
  - Day-ahead Operating Reserve credit equals any portion of the resource’s total day-ahead offer amount in excess of its total day-ahead market value
  - Day-ahead Operating Reserve credits can be further adjusted by the Day-ahead Operating Reserve Offset as described below to remove any commitment costs, including start-up and no-load costs that are credited through Balancing Operating Reserve credits.
  - For each Operating Day, PJM calculates for each resource, hourly Day-ahead Operating Reserve and a Balancing Operating Reserve Targets. These hourly targets are summed to obtain a Day-ahead Operating Reserve Target and a Balancing Operating Reserve Target for each Operating Day.
- The Day-ahead Operating Reserve Target is calculated as follows:

Day-ahead Operating Reserve Target = (Start-up costs + No-load and Energy Offer Costs) – Day-ahead Revenues

- The No-load and Energy Offer Costs are equal to the sum of the day-ahead no-load and energy offer costs over the Real-time Settlement Intervals that coincide with day-ahead settlement intervals that the resource was scheduled to provide energy. The hourly day-ahead no-load and energy offer costs are divided by twelve to calculate the cost for each Real-time Settlement Interval.
- The Day-ahead Revenues are equal to the sum of the day-ahead scheduled MWh multiplied by the hourly day-ahead LMP at the resource bus divided by twelve for each Real-time Settlement Interval that coincides with a Day-ahead Settlement Interval that the resource was scheduled to provide energy.
- The Balancing Operating Reserve Target is calculated as follows:

Balancing Operating Reserve Target = Resource Costs – (Real-Time Energy Revenue + Reserve Revenue)

- The Resource Costs are equal to the sum of the start-up, no-load and energy offer costs for all Real-time Settlement Intervals that coincide with day-ahead settlement intervals that the resource was scheduled to provide energy.
- The Real-Time Energy Revenue is equal to the five minute revenue data for settlement MW value minus the day-ahead scheduled MWh multiplied by the five minute real-time LMP at the generator's bus plus the sum of the Day-ahead Revenues as calculated above summed over the applicable Real-time Settlement Intervals.
- The Reserve Revenue is equal to the sum of revenues above cost for Synchronized Reserves, Non-Synchronized Reserves, Secondary Reserves, minus the Market Revenue Neutrality Offset for those same products, plus the Reactive Services make whole credits over the applicable Real-time Settlement Intervals.
- The Day-ahead Operating Reserve credits are adjusted by the following offset:

Day-ahead Operating Reserve Offset = Max (Day-ahead Operating Reserve Target – Balancing Operating Reserve Target, 0)

- PJM sums the Day-ahead Operating Reserve generating resource credits for each PJM Member, taking into account joint-ownership of generating units.
- PJM determines eligibility for Balancing Operating Reserve credits for each generating resource from dispatcher logs. The following operating guidelines are used in the determination of Operating Reserve credits:
    - Resource must operate according to the on and off times requested by PJM, and units tripping during pool-scheduled periods of operation will retain their eligibility up through the five minute interval in which the unit trips.
    - Resources that trip or fail to start are required to notify PJM per the Synchronization and Disconnection procedures in PJM Manual 14D: Generator Operational Requirements.

  - Resources that trip, are requested to restart by PJM, and return to operate as requested, are eligible to receive credits for the latter period of operation. Resources that trip or failed to start, are requested to restart by PJM for reliability, and operate as requested, are eligible for additional startup costs.
  - Nuclear Units are excluded from eligibility for Operating Reserve credits except in cases where PJM requests that nuclear units reduce output at PJM's direction or where a physical problem at a nuclear unit requires a risk premium and that risk premium is submitted to and accepted by the MMU. Other specific circumstances will be evaluated on a case-by-case basis by PJM and MMU.
  - A resource that is called on to operate for a Generation Capacity Resource Operational test is eligible for Balancing Operating Reserve credits. A resource is not eligible for Balancing Operating Reserve credits for a PJM initiated retest following a failed initial test.
- PJM determines the resource's five minute Real-time MW as described in Section 1A of this PJM Manual.
- Generation resources that are scheduled in the Day-ahead Market are financially responsible for selling their output in real-time. Section 3.2.3(f-1)(ii) of the PJM OATT details provisions for lost opportunity credits for those Flexible Resources that were scheduled in the Day-ahead Market but are not called on by PJM to run in real-time (See Section 5.2.6 – Credits for Resources Reduced or Suspended due to a Transmission Constraint or for Other Reliability Reasons). Flexible Resources eligible to be called on in real-time must have a startup plus notification time of 2 hours or less and a minimum run time of 2 hours or less for PJM to accurately assess the economic value of the unit and are therefore the only units eligible for these provisions. Any resource scheduled in the Day-ahead Market with a startup plus notification time of greater than 2 hours and a minimum run time of greater than 2 hours should assume that they are committed by PJM in real-time for the duration of the Day-ahead commitment and are therefore only eligible for the aforementioned make whole provisions if PJM denies the commitment of that unit in real-time for either a transmission constraint or reliability.
- If a generation owner calls PJM to bring on a Flexible Resource per its Day-ahead schedule and PJM does not permit the unit to operate in real-time either for reliability or a transmission constraint, it may receive lost opportunity costs as described in section 3.2.3(f-1)(ii) of the OATT as it was not permitted to run by PJM in real-time (See Section 5.2.6 – Credits for Resources Reduced or Suspended due to a Transmission Constraint or for Other Reliability Reasons).
- If a Flexible Resource is committed in the Day-ahead Market with a startup plus notification time of 2 hours or less and a minimum run time of 2 hours or less at the time of the Day-ahead commitment and then extends its startup plus notification time to more than 2 hours or its minimum run time to more than 2 hours, it will not be eligible to receive the aforementioned lost opportunity cost provisions in section 3.2.3(f-1)(ii) of the PJM Tariff.
- PJM determines the resource's five-minute interval Operating Reserve Desired MW based on its ramp-limited desired MW or dispatch signal MW, when available. If available,

dispatch signal MW is used when 1.) the dispatch signal MW are less than or equal to the ramp-limited desired MW or 2.) the dispatch signal MW is greater than the ramp-limited desired MW and the resource's Real-time MW is greater than the ramp-limited desired MW. The calculation of the ramp-limited desired MW is described in Section 5.3.2.3A of this manual.

- PJM determines the resource's percent off dispatch for each five-minute interval as the lesser of the difference between the resource's Real-time MW and the dispatch signal MW or the Real-time MW and the ramp-limited desired MW, if available. Dispatch LMP desired MW is used to calculate a resource's percent off dispatch when 1.) data is unavailable due to technical difficulties or 2.) a resource's real-time economic minimum is greater than 105% of its day-ahead economic minimum or day-ahead economic minimum plus 5 MW, whichever is greater, or its real-time economic maximum is less than 95% of its day-ahead economic maximum or day-ahead economic maximum minus 5MW, whichever is lower.
- If the resource's dispatch signal MW and ramp-limited desired MW are not available or the percent off dispatch is greater than 20%, PJM determines the resource's five minute interval dispatch LMP Desired MW based on its dispatch rate, applicable schedule's offer data (where the applicable schedule's offer is the Final Offer) and minimum and maximum energy limits for that five minute interval. The lesser of the day-ahead scheduled and real-time economic minimum limits and the greater of the day-ahead scheduled and real-time economic maximum limits are used. The five minute interval dispatch LMP Desired MW is not ramp-limited.
- PJM calculates the resource's five minute interval real-time energy offer amount based on its applicable schedule's offer data, where the applicable schedule's offer is lesser of the Committed Offer and the Final Offer, and its Real-time MW for that five minute interval. However, for any five minute interval where the resource's Real-time MW is greater than 110% of its Operating Reserve Desired MW, Operating Reserve Desired MW is used to determine the five minute interval real-time energy offer amount. If PJM declares a Realtime Market Suspension, the Real-time MW is used to determine the five minute interval real-time energy offer amount.
- PJM applies the startup and hourly no-load bids if the startup and no-load switch is set in the resource offer data and if the startup bid is applicable for the status of the resource.
- If applicable, when a resource is started during the day at the direction of PJM, the resource's real-time offer amount for that day includes its startup costs based on the appropriate hot, intermediate, or cold state of the resource. For resources that start generating for PJM from a condensing state, the resource's real-time offer amount for that day includes the applicable Condense to Generate Cost for that resource.
- PJM calculates the resource's balancing energy market value for each five minute interval in an hour as:

  *[(Real time MW** – Day-ahead Scheduled MW) * five minute RT LMP] /12*

  Where the Real-time MW is the greater of A or B

A = Real-time actual MW

B = Minimum (Day-ahead Scheduled MW, Maximum (Real-time Dispatch Desired MW, Original Scheduled Desired MW using the Committed Offer)) where

the Day-ahead Scheduled MW is a flat-profile of the hourly scheduled MWh across each of the five minute intervals of the hour

If a resource is committed in the Day-ahead market and increases the cost offer in real-time resulting in a reduction in Real-time actual MW from the DA Scheduled MW, the maximum of the Real-time actual MW and greater of the Real-time Dispatch Desired MW and the original Scheduled Desired MW using the Committed Offer (capped at the Day-ahead Scheduled MW) will be used in the balancing energy market value calculation.

*** If the reduction in Real-time actual MW from the DA Scheduled MW is the result of a PJM dispatch direction (including regulation, synchronized reserves, secondary reserves, reactive services, or reductions due to transmission constraints or reliability concerns), Real time actual MW are used.*

- Balancing Operating Reserve credits are calculated by operating segment within an Operating Day. A resource will be made whole for the duration of the greater of the day-ahead schedule and minimum run time specified at the time of the commitment and made whole separately for the block of real-time five minute settlement intervals it is operated at PJM's direction in excess of the greater of the day-ahead schedule and minimum run time specified at the time of the commitment.
  - For resources with a soak process: all intervals from synchronization to the start of the commitment, which are used for initial ramping and soaking to meet the commitment, are excluded from both segments. Startup costs, which are inclusive of initial ramping and soak costs, as applicable, will be included in the segment represented by the longer of the day-ahead schedule and minimum run time specified at the time of the commitment. The start of the commitment of a resource is the later of 1) the first interval of the commitment or 2) the time at which the resource reaches its economic minimum.
  - For resources without a soak process: ramping intervals prior to the start of the commitment, limited to 30 minutes, may be included in the segment represented by the longer of the day-ahead schedule and minimum run time specified at the time of the commitment. The start of the commitment of a resource is the later of 1) the first interval of the commitment or 2) the time at which the resource reaches its economic minimum.
- PJM calculates the daily Balancing Operating Reserve credits for each generating resource's operating segment as follows:
  - Sum five minute interval real-time offer amounts and include applicable no-load costs divided by twelve and startup costs for the segment
  - Sum five minute interval balancing energy market values for the segment

- For each operating segment, Balancing Operating Reserve credit equals any portion of the resource's total real-time offer amount in excess of: 1) its total day-ahead market value, plus 2) its total balancing market value, plus 3) any Day-ahead Operating Reserve credits, plus4) any Synchronized Reserve Market revenue in excess of its offer plus opportunity cost plus energy use plus startup costs, plus 5) any Non-Synchronized Reserve Market revenue in excess of its opportunity costs, plus 6) any Secondary Reserve Market revenue in excess of its opportunity costs, minus 7) the sum of the Market Revenue Neutrality Offsets for Synchronized Reserve, Non-Synchronized Reserve, and Secondary Reserve, plus 8) any Reactive Services make whole credit.
    - Synchronized Reserve, Non-Synchronized Reserve, and Secondary Reserve revenue above costs and the Market Revenue Neutrality Offsets are netted against the Operating Reserve credit in the corresponding five-minute interval in which they were accrued.
    - A resource that operates outside of its unit-specific parameters made whole in any intervals where the resource costs are greater than revenues unless the resource owner can justify to PJM that the operation outside of the unit-specific parameters was the result of an actual system constraint.
    - A resource is not eligible for Balancing Operating Reserve credits for a PJM initiated Generation Capacity Resource Operational retest following a failed initial test.
    - A resource is not eligible for Balancing Operating Reserve credits for a PJM initiated Generation Capacity Resource Operational retest following a failed initial test.
- For any Operating Day in which PJM declares a Maximum Generation Emergency or a Maximum Generation Emergency Alert, or schedules units based on the anticipation of a Max Generation Emergency or Maximum Generation Emergency Alert, if a generator's priced-based offer results in revenues for applicable "economic" five minute intervals to produce an effective offer price greater than or equal to $1,000/MWh and is greater than a Market Seller's lowest available and applicable cost-based offer, that generator shall not receive any operating reserve credits in accordance with the PJM Operating Agreement sections 3.2.3 (l), (m), and (n).
    - For the Real-time market, PJM calculates an effective offer price by summing the Operating Reserve credits which would have been applicable absent this exemption, plus the real-time LMP market value provided to the generator during "economic" five minute intervals, all divided by the sum of the generation MW during those "economic" five minute intervals. "Economic" five minute intervals are defined as: 1) those five minute intervals in which the real-time LMP is at or above the generator's offer price; 2) those five minute intervals that PJM dispatched the generator in excess of its min run time and the generator's offer price is above the real-time LMP; and, 3) those five minute intervals that a generator with a min run time of less than or equal to 1 hour and more than one available starts per day is operated at the request of PJM.
- PJM sums the Balancing Operating Reserve generating resource credits for each PJM Member, taking into account joint-ownership of generating units.

5.2.2 Credits for Pool-Scheduled Transactions

At the end of each Operating Day, PJM calculates the credits due each PJM Member for pool-scheduled energy sales to the spot market.

PJM Actions

- PJM retrieves the following information:
  - dispatcher transaction logs
  - day-ahead and real-time external energy sales to spot market
  - hourly transaction bid rate and MW ($/MWh, MW)
  - day-ahead and real-time LMPs
- PJM calculates the hourly day-ahead offer amount for each spot market import transaction by multiplying the cleared day-ahead transaction MWh by the transaction offer price.
- PJM calculates the hourly day-ahead energy market value for each spot market import transaction by multiplying the cleared day-ahead transaction MWh by the day-ahead LMP at the sink of the transaction.
- PJM calculates the daily Day-ahead Operating Reserve credits for each transaction as follows:
  - Sum hourly day-ahead offer amounts for the day
  - Sum hourly day-ahead energy market values for the day
  - Day-ahead Operating Reserve credit equals any portion of the transaction's total day-ahead offer amount in excess of its total day-ahead market value
- PJM sums the Day-ahead Operating Reserve transaction credits for each PJM Member.
- PJM calculates for each five-minute interval the real-time offer amount for each spot market import transaction by multiplying the real-time transaction MW by the transaction offer price divided by twelve.
- PJM calculates for each five-minute interval the balancing energy market value for each spot market import transaction by multiplying the real-time five-minute interval deviation from the cleared day-ahead transaction MW amount by the real-time LMP at the sink of the transaction divided by twelve.
- PJM calculates the daily Balancing Operating Reserve credits for each transaction as follows:
  - Sum the five-minute interval real-time offer amounts for the day
  - Sum the five-minute interval balancing energy market values for the day
- Balancing Operating Reserve credit equals any portion of the transaction's total real-time offer amount in excess of: 1) its total day-ahead market value, plus 2) its total balancing market value, plus 3) any Day-ahead Operating Reserve credits.
- PJM sums the Balancing Operating Reserve transaction credits for each PJM Member.

5.2.3 Credits for Synchronous Condensing

At the end of each Operating Day, PJM calculates the credits due each PJM Member for synchronous condensing for purposes other than providing synchronized reserve, secondary reserve, or Reactive Services.

PJM Actions

- PJM retrieves the following information:
  - dispatcher generation scheduling and operations logs
  - resource offer data
  - resource generation data
  - real-time LMPs
- PJM calculates the duration of each pool-scheduled period of synchronous condensing operations based on logged start and stop times.
- PJM calculates each eligible resource's condensing cost for each period by multiplying the Condense Energy Use as specified in the offer data times the applicable real-time LMP divided by twelve.
- When a resource is requested to start condensing from an off state, a condensing credit is provided equal to the resource's Condensing Startup Cost as specified in the offer data.
- PJM calculates the daily synchronous condensing cost for each resource by summing all five minute interval Condense Energy Use costs, including applicable Condensing Startup Costs, for the day.
- PJM calculates the unit-specific lost opportunity cost credits on a five minute interval for providing synchronous condensing for purposes other than providing synchronized reserve or Reactive Services.
- Five Minute Lost Opportunity Cost Credit = [(Five Minute RT LMP – Offer at Five Minute LMP Desired MW) * (Five Minute LMP Desired MW – Max (Five Minute Unit MW, 0))] / 12 only if quantity is positive.
- PJM sums the synchronous condensing credits for all resources for each PJM Member.

5.2.4 Credits for Canceled Pool-Scheduled Resources

At the end of each month, PJM calculates the credits due to each PJM Member for pool-scheduled resources that were canceled before coming on-line.

PJM Actions

- PJM retrieves the following information:
  - list of canceled resources (dispatcher log)
  - resource startup cost data
  - resource generation data

  - written confirmation of actual costs incurred by participants due to cancellations (to be received within 45 days of date the invoice was received by participant for the month in question)
- PJM credits each PJM Member for cancellations based on the actual costs incurred and submitted in writing to the PJM Market Settlement Operations Department. Eligibility is confirmed using resource generation data and dispatcher logs. The cancellation fee is defined as the actual costs incurred, that are typically included in Start-up Costs, when PJM cancels a pool-scheduled generation resource's start and the resource has not yet reached the point after generator breaker closure which is typically indicated by telemetered or aggregated state estimator MWs greater than zero. Cancellation Fees shall be capped at the appropriate Start-up Cost for the resource as specified in its offer data.
- PJM sums the Balancing Operating Reserve cancellation fees for all pool-scheduled resources for each PJM Member.
- PJM Market Settlement Operations Department enters the appropriate adjustment into the current month's billing.

5.2.5 Reserved for Future Use

5.2.6 Credits for Resources Reduced or Suspended due to a Transmission Constraint or for Other Reliability Reasons

At the end of each Operating Day, PJM calculates the credits due to each PJM Member for resources incurring lost opportunity costs associated with following PJM's request to reduce or suspend the output of a generating resource due to a transmission constraint or for other reliability reasons. A generating resource that is reduced to honor a stability limitation is not eligible for lost opportunity cost credits for the MWh reduction associated with honoring the stability limit. If a Market Participant believes the calculations in this section do not accurately compensate the Market Seller for opportunity cost associated with following PJM dispatch instructions and reducing or suspending a unit's output due to a transmission constraint or other reliability issue, or if an Energy Storage Resource Model Participant or a Hybrid Resource believes the above calculations do not accurately compensate the Market Participant for opportunity costs associated with following PJM's dispatch instructions to modify a unit's charging or discharging due to a transmission or other reliability issue, the Market Participant may follow the processes outlined in the Tariff, Attachment K - Appendix, Section 3.2.3 (f-3) and (f-5).

If a Real-time Market Suspension lasting more than 24 consecutive hours occurs, resources are not compensated for lost opportunity cost credits as defined in this section 5.2.6.

5.2.6.1 Pool-Scheduled Generators

Pool-scheduled generators whose output is reduced or suspended and the five minute real-time LMP at the unit's bus is higher than its offer corresponding to the level of output requested by PJM are credited for each five minute interval in an amount equal to:

*[(Lost Opportunity Cost (LOC)) Deviation * (Five Minute Real-time LMP at generator bus) – Total Lost Opportunity Cost Offer] / 12*, if the result of the calculation is greater than $0.00.

- The LOC Deviation is the difference between the generating resource's Desired MW output using the Final Offer based on the five minute real-time LMP at the generator's bus and the generating resources actual output. The Desired MW output is adjusted for any reduction in MW due to regulation, secondary reserve, or synchronized reserve assignments and is limited to the lesser of the unit's economic maximum, the stability limit in effect or the unit's maximum output as specified in the Generator Interconnection Agreement. If a unit does not have an Generator Interconnection Agreement with PJM, the Desired MW is limited to the lesser of the unit's economic maximum or the economic maximum adjusted by the stability limit in effect.
- Total Lost Opportunity Cost Offer is the five minute interval offer integrated under the applicable offer curve for the LOC Deviation where the applicable offer curve is the greater of the Committed Offer or the Final Offer for each hour of the Operating Day.

5.2.6.2 Self-Scheduled Generators

Self-scheduled generators whose output is reduced or suspended and the five minute real-time LMP at the unit's bus is higher than its offer corresponding to the level of output requested by PJM are credited for each five minute interval in an amount equal to:

*[(LOC Deviation * Five Minute Real-time LMP at the generator bus) – Total Lost Opportunity Cost Offer] / 12*, if the result of the calculation is greater than $0.00.

- The LOC Deviation is the difference between the generating resource's Desired MW output using the applicable real-time offer based on the five minute real-time LMP at the generator bus and the generating resource's actual output. The Desired MW output is adjusted for any reduction in MW due to regulation, secondary reserve, or synchronized reserve assignments and is limited to the lesser of the unit's economic maximum, the stability limit in effect or the unit's maximum output as specified in the Generator Interconnection Agreement. If a unit does not have an Generator Interconnection Agreement with PJM, the Desired MW is limited to the lesser of the unit's economic maximum or the economic maximum adjusted by the stability limit in effect.
- The Total Lost Opportunity Cost Offer is the five minute interval offer integrated under the applicable offer curve for the LOC Deviation as determined below:
    - For a self-scheduled generator operating on a cost-based offer, the applicable offer curve is the greater of the originally submitted cost-based offer or the cost-based offer that the generator was dispatched on in real-time.
    - For a self-scheduled generator operating on a market-based offer, the applicable offer is determined by the following process:
        - If there is only one available cost-based offer:
            - Step 1: Select the greater of cost-based Day-ahead offer and the updated cost-based Real-time offer.

- Step 2: Compare the offer from Step 1 with the market-based Day-ahead offer and the market-based Real-time offer and select the greatest offer as the applicable offer.

- If there are multiple cost-based offers available,
  - Step 1: For each available cost-based offer, select the greater of the Day-ahead offer and the updated Real-time offer.
  - Step 2: Compare the cost-based offers from Step 1 and select the lesser of all the cost-based offers.
  - Step 3: Compare the cost-based offer from Step 2 with the market-based Day-ahead offer and the market-based Real-time offer and select the greatest offer as the applicable offer.

5.2.6.3 Flexible Resources

Pool-scheduled Flexible Resources that are scheduled to produce energy in the day-ahead market, but are not called on by PJM and do not operate in the corresponding five minute real-time interval, are credited for each five minute interval in an amount equal to the higher of the following, if the resulting outcome is greater than $0.00:

*[(Real-time LMP – Day-ahead LMP) * Day-ahead scheduled MW] / 12;*

Or

[(Day-ahead committed MWh Real-time LMP) – (Total Lost Opportunity Cost Offer including no-load costs)] / 12 + (the start-up costs/number of contiguous hours scheduled in the Day-ahead Energy Market)*

- The Total Lost Opportunity Cost Offer is the five minute interval offer integrated under the applicable offer curve for the Day-ahead committed MW where the applicable offer curve is the greater of the Committed Offer or the last Real-time Offer submitted for the offer that the generating resource was committed in the Day-ahead Energy Market for each hour of the Operating Day.
- In the case where a Flexible Resource operates in real-time following PJM dispatch and at least one five minute interval of real-time operation coincides with the any of the hours of the day-ahead commitment, the start-up costs will be excluded from the calculation.

Flexible Resources that submit a Real-time offer greater than their resource's Committed Offer in the Day-ahead energy market are not eligible to received Lost Opportunity Cost Credits.

5.2.6.4 Wind and Solar Generators, Hybrid Resources, and Energy Storage Resource Model Participants

Pool-scheduled or self-scheduled wind generators, solar generators, Hybrid Resources, or Energy Storage Resource Model Participants whose output is reduced or suspended at the request of the Office of the Interconnection due to a transmission constraint or reliability issue

and the five minute real-time LMP at the unit's bus is higher than the unit's offer corresponding to the level of output requested by PJM are credited for each five minute interval in an amount equal to:

*[(LOC Deviation * Real-time LMP at the generator bus) – Total Lost Opportunity Cost Offer] / 12*, if the result of the calculation is greater than $0.00.

- The LOC Deviation is the difference between the wind, solar, Hybrid, Energy Storage Model Participants resource's scheduled output, which is the lesser of the PJM forecasted output inclusive of state of charge ("SOC") where applicable, or the Desired MW using the Final Offer based on the five minute real-time LMP at the resource's bus, and the resource's actual output, where the actual output of the unit is floored at 0. The Desired MW is also limited to the lesser of the resource's Economic Maximum, the stability limit in effect, or the resource's maximum output as specified in the Generator Interconnection Agreement. If a resource does not have an Generator Interconnection Agreement with PJM, the Desired MW is limited to the lesser of the unit's economic maximum or the economic maximum adjusted by the stability limit in effect. The Desired MW is also adjusted by any reduction in MWs due to Regulation, Synchronized Reserve, or Secondary Reserve assignments.
    - As the state of charge field in Markets Gateway is optional, PJM will use SOC telemetry measurement data to determine the five-minute integrated MW for Energy Storage Resource Model Participants and Hybrid Resources, where applicable.
- The Total Lost Opportunity Cost Offer for a pool-scheduled or self-scheduled wind, solar, Hybrid, or Energy Storage Resource Model Participant resource is determined in the same manner as described in this section for pool-scheduled and self-scheduled generators respectively.
- Pool-scheduled or self-scheduled wind generators, solar generators, Hybrid Resources, or Energy Storage Resource Model Participants are only eligible for the above-referenced credit if they:
    - Operated the wind, solar, Hybrid, or Energy Storage Resource Model Participant resource according to PJM Manual and Tariff requirements for such resource (PJM Manual 14D: Generator Operational Requirements)
    - Have SCADA capability to transmit and receive instructions from PJM
    - Have provided quality meteorological data to support PJM forecasting tools per PJM Manual 14D: Generator Operational Requirements

If PJM experiences a technical issue (e.g. computer system failure or disruption or failure of communications equipment) resulting in an erroneous forecast, PJM and the Market Participant will determine a mutually agreeable settlement value. Recommendations for reconciliation include but are not limited to:

- Using the forecast values as determined by PJM forecasting tools from before and after the technical issue to determine forecast value during the issue

- Using the forecast value as determined by PJM forecasting tools from before the technical issue for the first half of the duration of the technical issue and forecast value from after the technical issue for the latter half of the duration of the technical issue
- Using Market Seller's forecast value during the technical issue

An Energy Storage Resource Model Participant or a Hybrid Resource instructed to increase charging at the request of PJM due to a transmission constraint or other reliability issue will be compensated for the increase in charging in the same manner as described in Section 5.2.2, Balancing Operating Reserve credits. An Energy Storage Resource Model Participant or a Hybrid Resource instructed to reduce charging is not eligible for compensation under this section.

PJM Actions

- PJM retrieves the following information:
  - list of resources and timeframes reduced or suspended for a transmission constraint or other reliability reason (dispatcher logs and Market Operations eligibility data)
  - resource offer data
  - hourly scheduled MWh for generation offers cleared in day-ahead market
  - five minute revenue meter generation MW values from PJM Power Meter if available
  - five minute state estimator or telemetry generation MW, scaled to match hourly revenue meter generation MWh from PJM Power Meter as described in Section 1A of this PJM Manual
  - hourly scheduled MWh for InSchedule "Generation" contracts, if applicable
  - generator hourly day-ahead LMPs
  - five minute real-time LMPs
  - assigned regulation MW~~,~~ and performance scores ~~and marginal benefit factors~~
  - assigned synchronized and secondary reserve MW
  - five minute forecast from PJM's forecasting tools and good quality data indicator
  - five minute state of charge MW
  - maximum facility output MW from Generator Interconnection Agreements
- PJM sums the Balancing Operating Reserve lost opportunity cost credits for all reduced or suspended generating resources for each PJM Member.

5.2.6.5 Run of River Hydro Resources

Run of river hydro pool-scheduled or self-scheduled resources with a Day-ahead commitment greater than zero that are in spill conditions and whose output is reduced or suspended at the request of the Office of the Interconnection due to a transmission constraint or reliability issue are credited for each five minute interval in an amount equal to:

(LOC Deviation * Real-time LMP)/ 12, if the result of the calculation is greater than $0.00.

- The LOC Deviation is the difference between the Day-ahead commitment and maximum of the real-time directed output or five minute Revenue Data for Settlements MW. The real-time directed output is the megawatt level the hydro resource(s) was manually directed to operate by PJM Dispatch.

Run of river hydro resources with a Day-ahead commitment greater than zero that are not in spill conditions and whose output is reduced or suspended at the request of the Office of the Interconnection due to a transmission constraint or reliability issue and the five minute real-time LMP at the unit's bus is higher than the unit's the appropriate on-peak/off-peak average Real-time LMP are credited for each five minute interval in an amount equal to:

[LOC Deviation * (Real-time LMP – Average of the appropriate on-peak/off-peak LMP as described below)] / 12, if the result of the calculation is greater than $0.00.

- The LOC Deviation is the difference between the Day-ahead commitment and maximum of the real-time directed output or five minute Revenue Data for Settlements MW. The real-time directed output is the megawatt level the hydro resource(s) was manually directed to operate by PJM Dispatch.

The average of the real-time LMP for the operating day is calculated separately for on peak (0700 – 2259) and off-peak (0000-0659, 2300 – 2359) periods excluding any hours during which all available units at the hydro plant were operating.

The calculations above are performed at the level specified in the manual dispatch directive: whether for a single unit, several units, or the entire hydro station.

5.2.7 Credits for Resources Performing Annual Scheduled Black Start Tests

At the end of each month, PJM calculates the credits due to each PJM Member for resources performing annual black start tests. Compensation for energy delivered to the transmission system shall be provided for the unit’s minimum run time at the higher of the unit’s cost-capped offer or real-time LMP plus start-up and no-load for up to two start attempts, if necessary. Compensation for tests where no energy was delivered to the transmission system shall be provided for the unit’s start-up costs for up to two start attempts, if necessary.

PJM Actions

- PJM retrieves the following information:
  - list of units performing annual scheduled black start tests (PJM Performance Compliance Department log)
  - resource cost-capped offer data
  - resource generation data
  - applicable real-time LMP
  - applicable start-up and no-load costs

- PJM sums the Balancing Operating Reserve annual black start test credits for all resources for each PJM Member.
- PJM Market Settlement Operations Department enters the appropriate adjustment into the current month's billing.

5.2.8 Credits for Resources Providing Reactive Services

At the end of each month, PJM credits each PJM Member for Reactive Services that are provided during the month.

Generators whose active energy output (positive generation output) is increased at the request of PJM for the purpose of maintaining reactive reliability within the PJM Region and the five minute real-time LMP at the generator bus is lower than its offer corresponding to the level of output requested by PJM are credited for each five minute interval in an amount equal to:

*[(Real-time MW – Desired MW) * (Offer - Five Minute real-time LMP at the generator bus)] / 12*

Only if the difference between the Offer and the Five Minute real-time LMP at the generator bus is positive.

- Desired MW is the MW amount of the generator using the Final Offer based on the five minute real-time LMP at the generator bus. The Desired MW is adjusted for any effective regulation or synchronized reserve assignments and capped at the stability limit in effect.
- Offer is the cost for the generator using the lesser of the Final Offer or Committed Offer at the increased MW level.

If an Energy Storage Resource Model Participant or a Hybrid Resource is instructed to increase charging at the request of PJM for the purpose of maintaining reactive reliability within the PJM region, and the LMP revenues at the generator's bus are lower than its offer corresponding to the increase in charging requested by PJM, the resource is credited for each five minute interval in an amount equal to:

[(Real-time MW - Desired MW) * (Offer - Five Minute real-time LMP at the generator bus)] / 12, if the result of the calculation is greater than $0.00.

- Desired MW is the MW amount of the generator using the Final Offer based on the five minute real-time LMP at the generator bus. The Desired MW is adjusted for any effective regulation or synchronized reserve assignments and capped at the stability limit in effect.
- Offer is the cost for the generator using the lesser of the Final Offer or Committed Offer for the increase in charging MWs.

In addition, generators instructed to reduce or suspend output from a positive output level for the purposes of maintaining reactive reliability are also credited for lost opportunity costs if the five minute real-time LMP at the generator's bus is higher than its offer corresponding to the level of output requested by PJM. Hybrid Resources and Energy Storage Resource Model

Participants are credited in the same manner as described in Section 5.2.6.4. Pool-scheduled generators are credited in the same manner as described in Section 5.2.6.1, and self-scheduled generators are credited in the same manner as described in Section 5.2.6.2.

If a Market Participant believes the calculations in this section do not accurately compensate the Market Seller for lost opportunity cost associated with following PJM dispatch instructions to reduce or suspend a unit's output for the purpose of maintaining reactive reliability, or if an Energy Storage Resource Model Participant or a Hybrid Resource believes the above calculations do not accurately compensate the Market Participant for opportunity costs associated with following PJM's dispatch instructions to modify a unit's charging or discharging for the purpose of maintaining reactive reliability, the Market Participant may follow the process outlined in the Tariff, Attachment K - Appendix, Section 3.2.3B (h).

Generators operating as synchronous condensers for the purpose of maintaining reactive reliability at the request of PJM, are credited for each five minute interval of condensing an amount equal to the higher of: 1) the Synchronized Reserve Market Clearing Price for the five minute interval divided by 12 multiplied by the amount of synchronized reserve provided (i.e., economic maximum limit of the unit); or 2) the sum of the unit’s offered Condense Energy Use cost, Condense Start-up Cost, and the unit-specific lost opportunity cost of the resource supplying the increment of Synchronized Reserve divided by 12.

PJM Actions

- PJM retrieves the following information:
  - dispatcher generation scheduling and operations logs
  - resource offer data
  - hourly scheduled MWh for generation offers cleared in day-ahead market
  - state estimator generation MWh
  - five minute revenue meter generation MW values from PJM Power Meter, if available
  - state estimator or telemetry generation MW, scaled to match hourly revenue meter generation MWh from PJM Power Meter as described in Section 1A of this PJM Manual)
  - hourly scheduled MWh for InSchedule “Generation” contracts, if applicable
  - generator hourly day-ahead LMPs
  - five minute real-time LMPs
  - assigned regulation MW and~~,~~ performance scores ~~and marginal benefit factors~~
  - assigned synchronized reserve MW
  - maximum facility output MW from Generator Interconnection Agreements
- PJM sums the reactive services credits for all generating resources for each PJM Member.

5.2.9 Dispatch Differential Lost Opportunity Cost Credits

As noted in Manual 11, a pricing run calculates the Locational Marginal Prices distinct from the security-constrained economic dispatch of the system. This results in the need for a lost opportunity cost credit to ensure that resources dispatched down in the security-constrained economic dispatch continue to follow PJM's dispatch instructions to address the inflexibility of Fast-Start resources.

Only pool-scheduled or dispatchable self-scheduled resources that are dispatched for energy only by PJM are eligible for Dispatch Differential Lost Opportunity Cost credits.

Pool-scheduled and dispatchable self-scheduled resources that are 1) dispatched by PJM to provide regulation or ancillary services in the real-time market; or 2) manually dispatched by PJM due to a transmission constraint or for other reliability reasons are not eligible to receive Dispatch Differential Lost Opportunity Cost credits.

Dispatch Differential Lost Opportunity Cost credits are only calculated in the balancing energy market.

PJM calculates the Dispatch Differential Lost Opportunity Cost credits for an eligible resource for each five minute real-time settlement interval as the positive difference between the revenue above cost for the pricing run and the revenue above cost for the dispatch run.

PJM Actions

- PJM retrieves the following information:
  - dispatcher generation scheduling and operations logs
  - five minute interval generator dispatch MW values
  - resource offer data - the resource's Final Offer, which is the offer on which the resource was dispatched by the Office of the Interconnection for a particular clock hour for the Operating Day
  - five minute revenue meter generation MW values from PJM Power Meter, if available
  - state estimator or telemetry generation MW, scaled to match hourly revenue meter generation MWh from PJM Power Meter as described in Section 1A of this PJM Manual)
  - five minute real-time LMPs

The revenue above cost for the pricing run is calculated for each five minute settlement interval as follows:

Pricing Run Revenue Above Cost = (Resource Expected MW Output * Five Minute real-time LMP at the applicable pricing point) – Real-time Market Offer

- The Resource Expected MW Output is the Desired MW (capped at the stability limit in effect) value of the resource based on the Final Offer at the five minute real-time LMP at the applicable pricing point.

- The Real-time Market Offer is the five minute interval offer integrated under the Final Offer for the Resource Expected MW Output.

The revenue above cost for the dispatch run is calculated for each five-minute settlement interval as follows:

Dispatch Run Revenue Above Cost = Max(Five Minute Dispatch MW * Five Minute real-time LMP at the applicable pricing point, Five Minute Revenue Data for Settlements MW * Five Minute real-time LMP at the applicable pricing point) – Min(Cost of the Five Minute Dispatch MW, Cost of Five Minute Revenue Data for Settlement MW)

- The Five Minute Dispatch MW is the MW setpoint for a resource as determined in the security-constrained economic dispatch run.
- The Cost of the Five Minute Dispatch MW is the five minute interval offer integrated under the Final Offer for the Five Minute Dispatch MW.
- The Cost of the Five Minute Revenue Data for Settlements MW is the five minute interval offer integrated under the Final Offer for the Five Minute Revenue Data for Settlements MW.

Dispatch Differential Lost Opportunity Cost Credit = Max(Pricing Run Revenue Above Cost – Dispatch Run Revenue Above Cost, 0)

- PJM sums the Dispatch Differential Lost Opportunity Cost credits for all generating resources for each PJM Member for each hour of the Operating Day.

5.3 Charges for Operating Reserve

The total cost of providing Operating Reserve for the Operating Day is the sum of the credits provided to PJM Market Participant for supplying the Day-ahead and Balancing Market Operating Reserve except those Operating Reserve credits associated with the scheduling of units for Black Start service or testing of Black Start Units, Reactive Services or transfer interface. Credits associated with Black Start service or testing of Black Start Units, Reactive Service or transfer interface control are charged separate of Day-ahead Operating Reserves and Balancing Operating Reserves.

Any Operating Reserve charges attributable to generators operated on behalf of transmission owners for local constraints, or on behalf of generation owners for special unit constraints, are directly assessed to the applicable requesting party.

5.3.1 Day-ahead Operating Reserves

The daily total cost of Day-ahead Operating Reserve excluding the total cost for resources scheduled to provide Black Start Service, Reactive Services or transfer interface control is determined only for the RTO region, allocated and charged to PJM Market Participants in proportion to their cleared day-ahead demand, day-ahead Load Response bids, decrement

bids, and up-to congestion transactions at the sink end of the transaction plus their cleared day-ahead exports. Charge allocations for Black Start Service are described in Section 5.3.4 of this PJM Manual and for Reactive Services are described in Section 5.3.5 of this PJM Manual.

PJM Actions

- PJM retrieves the following information for Day-ahead Operating Reserve Charges:
  - Cleared Day-ahead demand (MWh)
  - Cleared Day-ahead decrement bid (MWh)
  - Cleared Day-ahead exports (MWh)
  - Cleared Day-ahead up-to congestion transactions (MWh)
  - Cleared Day-ahead Load Response bid (MWh)
  - Total Day-ahead Operating Reserve generating resource credits ($)
  - Total Day-ahead Operating Reserve transaction credit ($)
- PJM calculates the Day-ahead Operating Reserve Charge as the Market Participant's ratio share of the total Day-ahead Operating Reserve credits as follows:
  - *Day-ahead Operating Reserve Charge = Total Day-ahead Operating Credits * ((Cleared Day-ahead demand + decrement bids + up-to congestion transactions + exports - cleared Day-ahead Load Response Bids where applicable*) / (Total cleared Day-ahead demand + decrement bids + exports + up to congestion transactions - cleared Day-ahead Load Response Bids where applicable*)*
    - *cleared Day-ahead Load Response bids are subtracted from cleared Day-ahead volumes for LSEs whose load was reduced by the cleared MW
  - *Total Day-ahead Operating Credits = Total Day-ahead Operating Reserve generating resource credits + Total Day-ahead Operating Reserve transaction credits*

5.3.2 Balancing Operating Reserves

The daily total cost of Balancing Operating Reserve excluding the total cost for resources scheduled to provide Black Start Service is determined for each region (RTO, East and West) which is allocated and charged to PJM Market Participants depending if the Balancing Operating Reserve credits are deemed for reliability or deviations. If PJM declares a Real-time Market Suspension for any hour during an Operating Day, the total cost of Balancing Operating Reserves is allocated to the ratio share of real-time load plus export transactions.

The regions are defined as follows:

- RTO region = the East and West regions plus exports that are at the interfaces or hubs not completely contained in either the East or West region
- East region = transmission zones AEC, BGE, Dominion, DPL, JCPL, ME, PECO, Penelec, PEPCO, PPL, PSEG and RE

- West region = transmission zones AEP, APS, ATSI, ComEd, DEOK, DUQ, DAY, EKPC and OVEC

PJM determine if Balancing Operating Reserve credits should be charged to the East region or West region, instead of the RTO region, when the resource is needed for a transmission constraint that occur on transmission lines equal to or less than 345 kV.

5.3.2.1 Balancing Operating Reserves for Reliability Charge

PJM calculates for each Operating Day the total Regional Cost of Balancing Operating Reserve to be charged for reliability for each region and for all PJM Market Participants excluding those credits associated with the scheduling of units for Black Start service or testing of Black Start units. PJM allocates these total costs for reliability to each PJM Market Participant based on their daily share of the sum of their Real-time load plus Real-time exports in each region (RTO, East, West).

PJM Actions

- PJM retrieves the following information for Balancing Operating Reserve charges for reliability by region:
  - Real-time load
  - Real-time exports
  - Total Balancing Operating Reserve resource credits for reliability ($)
- PJM calculates the Balancing Operating Reserve charge for reliability as the Market Participant's Real-time load plus exports share of the total Balancing Operating Reserve credits for reliability by region as follows:
  - *Balancing Operating Reserve for Reliability Charge (by region) = Total Balancing Operating Reserve Credits for Reliability * (Real-time load + Real-time exports share)*

5.3.2.2 Balancing Operating Reserves for Deviation Charge

PJM calculates for each Operating Day the total cost of Balancing Operating Reserve to be charged for deviations for each region and for all PJM Market Participants excluding those credits associated with the scheduling of units for Black Start service or testing of Black Start units. PJM allocates these total costs for deviations to each PJM Market Participant based on their daily share of the sum of their 5-minute interval deviations associated with generating resources, withdrawals and injections in each region (RTO, East, West).

PJM Actions

- PJM retrieves the following information for Balancing Operating Reserve charges for deviation by region:
  - Total RTO, East, or West regional Balancing Operating Reserve generating resource credits for deviations ($)
  - Total RTO region Balancing Operating Reserve demand resource credits ($)

- Total RTO region Balancing Operating Reserve transaction credits ($)
- Total RTO region Balancing Operating Reserve cancellation fees ($)
- Total RTO region Balancing Operating Reserve quick start resource credits ($)
- Total RTO region Balancing Operating Reserve reduction/suspension credits ($)

- PJM calculates the Balancing Operating Reserve charge for deviations as the Market Participant's total deviations share of the total Balancing Operating Reserve credits for deviation by region as follows:
  - *Balancing Operating Reserve for Deviations Charge (by region) = Total Balancing Operating Reserve Credit for Deviations * total MW deviations share*
  - *Total MW deviations = determined for each Market Participant as further described in Sections 5.3.2.3, 5.3.2.4 and 5.3.2.5 of this PJM Manual*

5.3.2.3 Deviation Calculations for Generating Resources

- PJM calculates for each hour of the Operating Day the individual generating resource deviations as the sum of the absolute value of the five minute interval deviations in the hour divided by 12 for generating resources that are not following dispatch for each five minute interval as follows:
  - Each pool-scheduled or dispatchable self-scheduled generator not following PJM dispatch due to its actual output not being between its ramp-limited Desired MW and dispatch signal MW, and its % off dispatch is > 10%, will be assessed deviations as Real-time MW – ramp-limited desired MW. If the % off dispatch is > 20%, deviations will be assessed as Real-time MW – dispatch LMP Desired MW (as determined in the Credits for Pool-Scheduled Generating Resources section of this manual).
  - For each self-scheduled generating resource with an economic maximum limit less than or equal to 110% of the economic minimum limit or not dispatched by PJM above its economic minimum, unless the resource is lowering its output in accordance with PJM direction in response to a minimum generation emergency event (or declaration) will be assessed deviations as Real-time MW – Day-ahead Schedule MW.
  - Each unit that has tripped or is scheduled Day-ahead and does not run in Real-time will be assessed deviations as Real-time MW – Day-ahead scheduled MW
  - Each unit that is dispatchable Day-Ahead but is Fixed Gen in real-time will be assessed deviations as Real-time MW – dispatch LMP Desired MW
  - Each unit that is not dispatchable in both the Day-ahead and Real-time market will be assessed deviations as Real-time MW – Day-ahead scheduled MW. Units that choose to participate in the Day-ahead pumped storage optimization program are considered not dispatchable in the Day-ahead market.
  - Each unit where the real-time economic minimum is greater than its Day-ahead economic minimum by 5% or 5 MW, whichever is greater, or its real-time economic maximum is less than its day-ahead economic maximum by 5% or 5MW, whichever is

lower, and dispatch LMP Desired MW for the hours is either below the real-time economic minimum or above the real-time economic maximum, will be assessed deviations as Real-time MW – dispatch LMP Desired MW

  - Deviations are not calculated if the absolute value of the deviation MW ratio to applicable day-ahead scheduled MW or desired MW is less than or equal to 5%

- Five minute intervals during which a generator is assigned by PJM for Regulation, assigned by PJM for Synchronized Reserve and reduced from its economic dispatch base point (and actual MW are less than day-ahead scheduled MW), assigned by PJM for Non-Synchronized Reserve (and actual MW are less than the day-ahead scheduled MW), or assigned by PJM for Secondary Reserve and reduced from its economic base point (and actual MW are less than the day-ahead schedule MW), or resources that respond to a Synchronized Reserve Event are omitted from this calculation.
- Resource five minute interval deviations for units located at a “single bus” will be able to offset one another. A “single bus” will be any unit located at the same site and that has the identical electrical impacts on the transmission system (“supplier netting”). Unit parameters do not have to be identical for the units’ deviation MW to offset one another. Units at a “single bus” must be contained in the same customer account. Additional details can be found in Manual 11, Section 3.3.3.
- If the hourly sum of the absolute value of the five minute interval deviations for a generating resource divided by 12 for an hour is less than 5 MWh, then the generating resource is not assessed a Balancing Operating Reserve deviation for that hour.

5.3.2.3A Calculation of Ramp Limited Desired MW

PJM calculates a Ramp Limited Desired MW value for units where the economic minimum and economic maximum are at least as far apart in Real-time as they are in Day-ahead.

- Real-time Economic Minimum <= 105% of Day-ahead Economic Minimum for Day-ahead Economic Minimum plus 5 MW, whichever is greater.
- Real-time Economic Maximum >= 95% of Day-ahead Economic Maximum or Day-ahead Economic Maximum minus 5 MW, whichever is lower.

PJM determines a unit's Ramp Limited Desired MW according to the following calculation:

$$Ramp\_Request_t = \left(Dispatchtarget_{t-1} - AOutput_{t-1}\right) / \left(LAtime_{t-1}\right)$$

$$Ramp\ Limited\ Desired\ MW_t = AOutput_{(t-1)} + \left(Ramp\_Request_t \times Case\_Eff\_time_{t-1}\right)$$

where:

Dispatchtarget = Dispatch Signal for the previous approved Dispatch case

AOutput = Unit's achievable target MW at case solution time

LAtime = Dispatch look ahead time

Case_Eff_time = Time between signal changes

5.3.2.4 Deviation Calculations for Withdrawals

- PJM calculates for each hour of the Operating Day the withdrawal deviations as the sum of the five minute interval real-time deviations from day-ahead values for each customer account as follows:
  - Absolute Value of (cleared day-ahead demand bid MW + cleared day-ahead decrement bid MW + cleared up-to congestion transaction MW at the sink end of the transaction + day-ahead exporttransaction MW – real-time load de-rated for transmission losses including the impact of load reconciliation MW – real-time export transaction MW - cleared Day-ahead Load Response Bids where applicable*) divided by 12
    - *cleared Day-ahead Load Response bids are subtracted from cleared Day-ahead volumes for LSEs whose load was reduced by the cleared MW.
  - Withdrawal deviations will be calculated separately for each zone, hub, and interface whereby allowing netting to occur within each of those locations. Further netting will also occur for any hubs and aggregates fully contained within a given zone.
  - Dynamically scheduled export transactions are omitted from this calculation.
  - Positive demand deviations (real-time withdrawal MWs less than day-ahead withdrawal MWs) will not be included in the total withdrawal deviation by location during five minute intervals in which an Primary Reserve or Synchronized Reserve shortage in real-time occurs or when PJM initiates the request for emergency load reductions in real-time in order to avoid a Primary Reserve or Synchronized Reserve shortage.
- Per FERC order ER18-86-002, Internal Bilateral Transactions, also known as IBTs in the InSchedule tool, are excluded from the Balancing Operating Deviation Withdrawal calculations effective 11/1/2018.

5.3.2.5 Deviation Calculation for Injections

- PJM calculates for each hour of the Operating Day the injection deviations as the sum of the five minute interval real-time deviations from day-ahead values for each customer account as follows:
  - Absolute Value of (cleared day-ahead increment offer MW + day-ahead import transaction MW – real-time import transaction MW) divided by 12
  - Injection deviations will be calculated separately for each zone, hub, and interface whereby allowing netting to occur within each of those locations. Further zonal netting will also occur for any hubs and aggregates fully contained within a given zone.
- Per FERC order ER18-86-002, Internal Bilateral Transactions, also known as IBTs in the InSchedule tool, are excluded from the Balancing Operating Deviation Injection calculations effective 11/1/2018.

5.3.3 Synchronous Condenser

The total daily cost of synchronous condenser payments (other than that for synchronized reserve, secondary reserve, or Reactive Services) is allocated and charged to PJM Market Participants in proportion to their Load Ratio Share during that Operating Day.

5.3.4 Black Start

The total monthly cost of Operating Reserves for resource providing Black Start service or testing of Black Start units is allocated to Network and Point-to-Point Transmission Customers based on their monthly transmission use on a megawatt basis. Additional details on this allocation can be found in PJM Manual 27: Open Access Transmission Tariff Accounting, Section 7.

5.3.5 Reactive Services

The total daily costs of resources providing Reactive Services as calculated in Section 5.2.8 of this manual and the total daily cost of Operating Reserves in the Day-ahead Market for resource scheduled to provide Reactive Services or transfer interface control because they are known or expected to be needed to maintain system reliability in a zone(s) are allocated and charged to reach Market Participant based on their Load Ratio Share in the applicable transmission zone(s).

5.3.6 Dispatch Differential Lost Opportunity Cost

The total hourly cost of the Dispatch Differential Lost Opportunity Cost credits are allocated and charged to PJM Market Participants on an RTO wide basis in proportion to their real-time load (excluding losses and Direct Charging Energy) plus exports during that Operating Day. Dynamically scheduled export transactions are omitted from this calculation.

5.4 Reconciliation for Operating Reserve Charges

PJM will calculate reconciled Operating Reserve charges for EDCs and Retail Load Aggregators (a.k.a. Electric Generation Suppliers) for past monthly billings on a two month lag that were based on Load Ratio Shares. The reconciliation kWh data must be supplied to PJM by the EDCs no later than the last day of the billing month that is two months after the original billing month. For example, all reconciliation data for January must be submitted by March 31 at 23:59. The reconciliation kWh data represents the difference between the scheduled Retail Load Responsibility or Wholesale Load Responsibility InSchedule (in MWh) and the “actual” usage based on metered data. This hourly kWh data must be reported separately for each applicable InSchedule contract.

PJM calculates the Operating Reserve charge for Reliability reconciliations by multiplying the daily kWh data (de-rated for transmission losses) for the region (RTO, East, and West) by the Operating Reserve charge for Reliability billing determinants for that region and day. The daily Operating Reserve charge for Reliability billing determinant (in $/MWh) for each region is

calculated by dividing the total Balancing Operating Reserve charges for Reliability in that region by the total real-time load (de-rated for transmission losses) and real-time exports in that region for that day. These charge reconciliations are then totaled for the month for each EDC or Retail Load Aggregator. Note that the reconciliation for Operating Reserve charges for Reliability for a month may be either a positive or a negative value, and may even be such that the reconciled load responsibility MWh results in a negative load quantity.

PJM calculates the Reactive Services charge reconciliations by multiplying the daily kWh data (de-rated for transmission losses) for the transmission zone by the Reactive Services billing determinants for that zone and day. The daily Reactive Services billing determinant (in $/MWh) for each transmission zone is calculated by dividing the total Reactive Services charge in that transmission zone by the total real-time load (de-rated for transmission losses) in that transmission zone for that day. These charge reconciliations are then totaled for the month for each EDC or Retail Load Aggregator. Note that the reconciliation for Operating Reserve charges for reactive services for a month may be either a positive or a negative value, and may even be such that the reconciled load responsibility MWh results in a negative load quantity.

PJM calculates the Synchronous Condensing charge reconciliations by multiplying the daily kWh data (de-rated for transmission losses) for the PJM Region by the Synchronous Condensing billing determinants for that day. The daily Synchronous Condensing billing determinant (in $/MWh) for the PJM Region is calculated by dividing the total Synchronous Condensing charges in the PJM Region by the total real-time load (de-rated for transmission losses) and real-time exports in the PJM Region for that day. These charge reconciliations are then totaled for the month for each EDC or Retail Load Aggregator. Note that the reconciliation for Operating Reserve charges for synchronous condensing for a month may be either a positive or a negative value, and may even be such that the reconciled load responsibility MWh results in a negative load quantity.

Section 6: Synchronized Reserve Accounting

Welcome to the Synchronized Reserve Accounting section of the ***PJM Manual for Operating Agreement Accounting***. In this section, you will find the following information:

- A description of how Synchronized Reserve are provided and accounted for in the PJM Energy Markets (see “Synchronized Reserve Accounting Overview”).
- How credits are calculated for providers of Synchronized Reserve (see “Credits for Synchronized Reserve”).
- How the total cost of Synchronized Reserve is allocated (see “Charges for Synchronized Reserve”).
- How Synchronized Reserve charge reconciliations are calculated (see “Reconciliation for Synchronized Reserve Charges”).

6.1 Synchronized Reserve Accounting Overview

Synchronized Reserve shall be supplied from resources located within the metered boundaries of PJM that are on-line an able to provide additional MWs within 10 minutes or less. Synchronized Reserve resources include generators and Economic Load Response Participants.

The total PJM Synchronized Reserve Requirement is defined as the amount of 10-minute reserve that must be synchronized to the grid in accordance with the applicable NERC Council standards. Additional details on the Primary and Synchronized Reserve requirements can be found in the PJM Manual13: Emergency Operations.

Synchronized Reserve credits are awarded to resources in both the Day-ahead and Real-time Synchronized Reserve Markets based on pool-scheduled and self-scheduled MW assignment and RT MW output.

The Synchronized Reserve offer price for resources is capped at the expected value of the penalty for failing to provide Synchronized Reserve ad described and calculated in the PJM Manual 15: Cost Development Guidelines.

Pool-scheduled generator resources assigned synchronized reserve in Synchronous Condensing mode and which respond to a Synchronized Reserve Event are made eligible for make-whole payments to recover applicable start-up, no-load and minimum energy costs in the Balancing Operating Reserve billing line item. Economic Load Response Participant resources that respond to a Synchronized Reserve Event are eligible for make-whole payments to recover shutdown cost and are made-whole in the Operating Reserve for Load Response billing line item.

Each Market Participant that is a Load Serving Entity (LSE) or synchronized buyer that is not part of an agreement to share reserves with external entities subject to the requirements in NERC Reliability Standard BAL-002 incurs a Synchronized Reserve Obligation based on their Load Ratio Share and applicable reserve location's assignments during that hour. During hours when the Synchronized Reserve Market Clearing Price (SRMCP) is the same throughout the entire RTO Reserve zone, an LSE's Synchronized Reserve Obligation is equal to its Load Ratio Share of the RTO Reserve zone times the amount of Synchronized Reserve assigned for all Real-time Settlement Intervals for the RTO reserve zone. During hours when the SRMCP is different between the RTO reserve zone and Reserve sub-zone an LSE's Synchronized Reserve Obligation will be calculated based on their load in the active sub-zone and/or the portion of the RTO Reserve Zone outside of the active sub-zone (the "non sub-zone"). The LSE's active sub-zone Synchronized Reserve Obligation is equal to its Load Ratio Share within that active sub-zone times the amount of Synchronized Reserve assigned (pool and self-scheduled) in that active sub-zone. The LSE's Synchronized Reserve Obligation in the non sub-zone is equal to its Load Ratio Share in the non sub-zone times the amount of Synchronized Reserve assigned (pool/self-scheduled) in the non sub-zone portion of the RTO.

Participants may fulfill their Synchronized Reserve obligations by entering bilateral arrangements with other PJM Market Participants, or purchasing Synchronized Reserve from the PJM Synchronized Reserve Market.

6.2 Credits for Synchronized Reserve

Synchronized Reserve credits are paid in both Day-ahead and Real-time Synchronized Reserve Markets to Market Participants that supply their resource to PJM as pool-scheduled or self-scheduled. The credits for the Day-ahead and Real-time Synchronized Reserve Markets appear on the billing statement as two separate billing line items:

- Day-ahead Synchronized Reserve Credits = Sum(Day-ahead Synchronized Reserve Market Clearing Price Credits) for the days in the billing period
- Balancing Synchronized Reserve Credits = Sum(Balancing Synchronized Reserve Market Clearing Price Credits + Synchronized Reserve Lost Opportunity Cost Credits) for the days in the billing period

Synchronized Reserve credits for jointly-owned generators supplying Synchronized Reserves are allocated to the owners based on their ownership share. Synchronized Reserve Shortfall Charges appear on the billing statement in the Synchronized Reserve Charge billing line item.

6.2.1 Day-ahead Synchronized Reserve Market Clearing Price Credit

Day-ahead Synchronized Reserve Market Clearing Price credits are paid to a pool-scheduled or self-scheduled resource that is assigned Synchronized Reserve MWs within the Day-ahead Market to satisfy the 30-minute Reserve Requirement, Primary Reserve Requirement and/or Synchronized Reserve Requirement. If a Day-ahead Market Suspension occurs, Day-ahead

Synchronized Reserve Market Clearing Prices will be set to $0/MWh and Day-ahead Synchronized Reserve assignments will be set to 0 MW.

PJM Actions

- PJM retrieves the following information for Day-ahead Synchronized Reserve Market Clearing Price credit:
  - Day-ahead Synchronized Reserve assignments (pool/self-scheduled) (MW)
  - Day-ahead Synchronized Reserve Market Clearing Price (DA SRMCP) ($/MWh)
- PJM calculates for each hour the Day-ahead Synchronized Reserve Market Clearing Price credit for each eligible resource by multiplying the Day-ahead Synchronized Reserve MWs assigned by the DA SRMCP.
  - Day-ahead Synchronized Reserve Market Clearing Price Credit = Day-ahead Synchronized Reserve MW * DA SRMCP

6.2.2 Balancing Synchronized Reserve Market Clearing Price Credit

Balancing Synchronized Reserve Market Clearing Price credits are paid to a pool-scheduled or self-scheduled resource that is assigned Synchronized Reserve within the Real-time Market to satisfy the 30-minute Reserve Requirement, Primary Reserve Requirement and/or Synchronized Reserve Requirement.

During a Real-time Market Suspension, if PJM is assigning Synchronized Reserves, Balancing Synchronized Reserve Market Clearing Price Credits will be calculated using Real-time Synchronized Reserve Market Clearing Prices calculated per Manual 11, Section 4.4.6.

PJM Actions

- PJM retrieves the following information for Balancing Synchronized Reserve Market Clearing Price credit:
  - Real-time Synchronized Reserve assignments (pool/self-scheduled) (MW)
  - Economic Maximum MW
  - Real-time Synchronized Reserve Maximum MW
  - Real-time MW output
  - Day-ahead Synchronized Reserve assignments (pool/self-scheduled) (MW)
  - Real-time Synchronized Reserve Market Clearing Price (RT SRMCP) ($/MWh)
  - Synchronized Reserve Shortfall MW
- PJM calculates for each Real-time Settlement Interval the Balancing Synchronized Reserve Market Clearing Price credit for each eligible resource by taking the difference between the *capped* Real-time Synchronized Reserve assignment and Day-ahead Synchronized Reserve assignment and multiplying it by the RT SRMCP, then dividing the product by 12.

- Balancing Synchronized Reserve Market Clearing Price Credit = ((Capped Real-time Synchronized Reserve Assignment – Day-ahead Synchronized Reserve Assignment) * RT SRMCP) / 12
- Capped Real-time Synchronized Reserve Assignment =
  - If no Synchronized Reserve Event occurs = Minimum (Real-time Synchronized Reserve Assignment MW, Max((Minimum (Economic Maximum MW, Real-time Synchronized Reserve Maximum MW) – Real-time MW Output),0))
  - If a Synchronized Reserve Event occurs = Real-time Synchronized Reserve Assignment MW
  - Capped Real-time Synchronized Reserve Assignment = Real-time Synchronized Reserve Assignment MW for Economic Load Response Participant resources

- Synchronized Reserve Shortfall Charge = If a pool-scheduled or self-scheduled generation resource or Economic Load Response Participant resource fails to provide the Real-time Synchronized Reserve the resource was directed to deploy during a Synchronized Reserve Event, then the resource will be assessed a Synchronized Reserve Shortfall Charge equal to the product of the RT SRMCP and the lesser of the amount of the MW shortfall during the event or Capped Real-time Synchronized Reserve Assignment MW. If there are multiple Synchronized Reserve Events during the Operating Day, the maximum MW shortfall across all events is the MW shortfall used to determine the Synchronized Reserve Shortfall Charge. The calculation of the MW shortfall is further described in Manual 11, Section 4. This Shortfall Charge will apply to each Real-Time Settlement Interval the resource was assigned or self-scheduled for real-time Synchronized Reserve in the Operating Day on which the event occurred. This charge is included in the calculation of the Synchronized Reserve Charge billing line item.

6.2.3 Synchronized Reserve Lost Opportunity Cost Credit

PJM calculates a Synchronized Reserve Lost Opportunity Cost Credit for pool-scheduled resources if the Synchronized Reserve Lost Opportunity Cost (excluding any reduction for a stability limit) is greater than the total SRMCP Credits (Day-ahead and Balancing) received through the Synchronized Reserve Market for each Real-time Settlement Interval. If the resulting amount is negative, then the credit is $0.

If a Day-ahead Market Suspension occurs, Day-ahead Synchronized Reserve prices and quantities will be zero. During a Real-time Market Suspension, if PJM is assigning Synchronized Reserves, the Real-time Synchronized Reserve Opportunity Cost will be calculated using Real-time LMPs calculated per Manual 11, Section 2.21.

PJM Actions

- PJM retrieves the following information for the Synchronized Reserve Lost Opportunity Cost credit:
  - Day-ahead Synchronized Reserve Offer Amount ($)

- Real-time Synchronized Reserve Offer Amount ($)
- Economic Maximum MW
- Real-time Synchronized Reserve Maximum MW
- Real-time MW usage
- Day-ahead MW usage
- Day-ahead Synchronized Reserve assignments (MW)
- Real-time Synchronized Reserve assignments (MW)
- Day-ahead Synchronized Reserve Market Clearing Price Credit ($/MWh)
- Balancing Synchronized Reserve Market Clearing Price Credit ($/MWh)
- Market Revenue Neutrality Offset ($) (as determined and calculated in Section 15 of this PJM Manual)
- Synchronized Reserve Opportunity Cost Credits Owed ($) (as determined and calculated in Section 15 of this PJM Manual)

- For each Real-time Settlement Interval, PJM calculates a Synchronized Reserve Lost Opportunity Cost Credit for a resource if the costs associated with that resource are greater than the credits received by the resource.
  - Synchronized Reserve Lost Opportunity Cost Credit = Max(Synchronized Reserve Cost – Synchronized Reserve Credit, 0)
- PJM calculates the cost side of the Synchronized Reserve Lost Opportunity Cost Credit equation as follows:
  - Synchronized Reserve Cost = (Day-ahead Synchronized Reserve Offer Amount + Real-time Synchronized Reserve Offer Amount + Day-ahead Synchronized Reserve Opportunity Cost + Real-time Synchronized Reserve Opportunity Cost) / 12
    - Day-ahead Synchronized Reserve Offer Amount = Day-ahead Synchronized Reserve Offer Price * Day-ahead Synchronized Reserve assignment
    - Real-time Synchronized Reserve Offer Amount = Real-time Synchronized Reserve Offer Price * Max(Capped Real-time Synchronized Reserve Assignment less any applied shortfall MW (as determined and calculated in Section 6.2.2 of the PJM Manual) – Day-ahead Synchronized Reserve assignment), 0).
    - Day-ahead Synchronized Reserve Opportunity Cost will equal (A * B) - C:
      - A = DA LMP at the generation bus or applicable Economic Load Response Participant resource pricing point
      - B = The deviation of the resource's energy output or load reduction necessary to supply a Day-ahead Synchronized Reserve assignment from the resource's expected energy output or load reduction level if it had been assigned in economic merit order to provide energy or reduce load in the dispatch run

- C = The Day-ahead Energy market offer integrated under the applicable energy offer curve for the resource's energy output or load reduction necessary to provide a Day-ahead Synchronized Reserve Market assignment from the resource's expected energy output or load reduction level if it had been assigned in economic merit order to provide energy or reduce load in the dispatch run.
- For the following resource types, the Day-ahead Synchronized Reserve Opportunity Cost is calculated as follows:
- Resources committed to provide synchronized reserves in synchronous condensing mode = (Day-ahead Condense Energy Use * DA LMP at the generation bus) + (Day-ahead Condense Start-up Costs / Number of Hours assigned Synchronized Reserve)
- Economic Load Response Participant resources that do not have a day-ahead commitment to provide energy in the same hour = $0

▪ Real-time Synchronized Reserve Opportunity Cost will equal (A * B) – C:

- A = RT LMP at the generation bus
- B = The deviation of the generation resource's output necessary to supply Synchronized Reserve in real-time, reduced by the amount of Synchronized Reserve the resource failed to respond during a Synchronized Reserve Event during the Operating Day, in excess of its Day-ahead Synchronized Reserve Market assignment and follow the Office of the Interconnection's signals and instructions from the generation resource's expected output level if it had been dispatched in economic merit order to provide energy in the pricing run
- C = The energy offer integrated under the applicable energy offer curve for the generation resource's output necessary to supply Synchronized Reserve in real-time from the lesser of the generation resource's output necessary to provide a Day-ahead Synchronized Reserve Market assignment or follow the Office of the Interconnection's signals and instructions from the generation resource's expected output level if it had been dispatched in economic merit order to provide energy in the pricing run.
- For the following resource types, the Real-time Synchronized Reserve Opportunity Cost is calculated as follows:
- Resources providing synchronized reserves in synchronous condensing mode = ((Real-time Condense Energy Use – Day-ahead Condense Energy Use) * RT LMP at the generation bus) + any additional Condense Start-up Cost in excess of Day-ahead Condense Start-up Cost. If a Real-time Market Suspension with a duration greater than 24 consecutive hours occurs, the real-time opportunity cost will be $0 for all synchronous condensers

- Hydro unit (spill mode) = (RT LMP at the generation bus * (Real-time Synchronized Reserve assignment – Day-ahead Synchronized Reserve assignment)
- Hydro unit (non-spill mode with day-ahead energy commitment > 0) = (RT LMP at the generation bus - average RT LMP at the generation bus for the appropriate on peak / off peak period) * (Real-time Synchronized Reserve assignment – Day-ahead Synchronized Reserve assignment). If the average RT LMP value is higher than the RT LMP at the generator bus, then the Real-time Synchronized Reserve Opportunity Cost will equal zero.
- Where the "on peak" is defined as 0700 – 2259 and "off-peak" is defined as 0000 – 0659, 2300-2359, excluding those hours during which all available units at the hydro plant were operating
- Hydro unit (non-spill mode with no day-ahead energy commitment > 0) = $0
- Economic Load Response Participant resources = $0

- PJM calculates the credit side of the Synchronized Reserve Lost Opportunity Cost Credit equation as follows:
  - Synchronized Reserve Credit = (Day-ahead Synchronized Reserve Market Clearing Price Credit /12) + (Market Revenue Neutrality Offset + Synchronized Reserve Opportunity Cost Credit Owed + Balancing Synchronized Reserve Market Clearing Price Credit – Synchronized Reserve Shortfall Charge)
    - Day-ahead Synchronized Reserve Market Clearing Price Credit = as determined and calculated in Section 6.2.1 of the PJM Manual
    - Market Revenue Neutrality Offset = as determined and calculated in Section 15 of this PJM Manual
    - Synchronized Reserve Opportunity Cost Credit Owed = as determined and calculated in Section 15 of this PJM Manual
    - Balancing Synchronized Reserve Market Clearing Price Credit = as determined and calculated in Section 6.2.2 of the PJM Manual
    - Synchronized Reserve Shortfall Charge = as determined and calculated in Section 6.2.2 of this PJM Manual. The shortfall charge applied to the credit side of this equation is capped at the Balancing Synchronized Reserve Market Clearing Price Credit if the Balancing Synchronized Reserve Market Clearing Price Credit is positive or capped at zero if the Balancing Synchronized Reserve Market Clearing Price Credit is negative.

6.3 Charges for Synchronized Reserve

PJM allocates the cost of the total Day-ahead and Balancing Synchronized Reserve credits paid to resources providing Synchronized Reserve as charges to Market Participants with a Synchronized Reserve Obligation in the RTO zone, active sub-zone or non sub-zone as

described in section 6.1 of this PJM Manual. PJM calculates charges for the RTO Reserve Zone when there is no price separation between the RTO Reserve Zone and the active sub-zone, and calculates charges for the active sub-zone and non sub-zone portions of the RTO, rather than for the RTO Reserve Zone, when there is price separation.

Each Market Participant that is a Load Serving Entity (LSE) or synchronized buyer that is not part of an agreement to share reserves with external entities subject to the requirements in NERC Reliability Standard BAL-002 incurs a Synchronized Reserve Obligation based on their Load Ratio Share and applicable reserve zone's or reserve sub-zone's assignments during that hour. A Load Serving Entity (LSE) whose reserve obligations are satisfied through an agreement to share reserves with external entities subject to the requirements in NERC Reliability Standard BAL-002 does not have a Synchronized Reserve Obligation.

PJM separately allocates the charges associated with Synchronized Reserve Market Clearing Price Credits and Synchronized Reserve Load Opportunity Cost Credits and includes them on the billing statement as one billing line item:

- Synchronized Reserve Charge = Synchronized Reserve Market Clearing Price Charge + Synchronized Reserve Lost Opportunity Cost Charge + Synchronized Reserve Retroactive Penalty Charge + Synchronized Reserve Shortfall Charge

6.3.1 Synchronized Reserve Clearing Price Charge

PJM Actions

- PJM retrieves the following information for the Synchronized Reserve Market Clearing Price Charge:
  - Market Participant's Load Ratio Share
  - Bilateral Synchronized Reserve transactions (sales and purchases) (MW)
  - Total PJM Day-ahead and Real-time Synchronized Reserve assigned (pool and self-scheduled) (MW)
  - Day-ahead Synchronized Reserve Market Clearing Price Credits ($)
  - Balancing Synchronized Reserve Market Clearing Price Credits ($)
- PJM calculates each Market Participant's hourly Synchronized Reserve Market Clearing Price charges by RTO zone or active sub-zone and non sub-zone in which the load is located by multiplying the Total Synchronized Reserve Market Clearing Price Credits in that location times the Market Participant's Synchronized Reserve Obligation Share in that location.
  - Synchronized Reserve Market Clearing Price Charges = Total Synchronized Reserve Market Clearing Price Credits * Synchronized Reserve Obligation Share
- PJM calculates for each hour the Total Synchronized Reserve Market Clearing Price Credits in the applicable location.

- Total Synchronized Reserve Market Clearing Price Credits = Day-ahead Synchronized Reserve Market Clearing Price Credits + Balancing Synchronized Reserve Market Clearing Price Credits – Synchronized Reserve Shortfall Charge

- PJM calculates each Market Participant's hourly Synchronized Reserve Obligation Share by RTO zone or active sub-zone and non sub-zone based on their Load Ratio Share in that location, adjusted by bilateral Synchronized Reserve sales and purchases.
  - Synchronized Reserve Obligation Share = ((Load Ratio Share * Total PJM Real-time Synchronized Reserve assigned) – Synchronized Reserve MW Purchased + Synchronized Reserve MW Sold) / Total PJM Real-time Synchronized Reserve assigned
    - If the Total PJM Real-time Synchronized Reserve assigned in an hour is zero, the Total PJM Day-ahead Synchronized Reserve assigned is used to determine the Synchronized Reserve Obligation Share

6.3.2 Synchronized Reserve Lost Opportunity Cost Charge

PJM Actions

- PJM retrieves the following information for Synchronized Reserve Lost Opportunity Cost Charge:
  - Market Participant's Load Ratio Share
  - Bilateral Synchronized Reserve transactions (sales and purchases) (MW)
  - Total PJM Day-ahead and Real-time Synchronized Reserve assigned (MW)
  - Self-scheduled Synchronized Reserve (MW)
  - Total PJM self-scheduled Synchronized Reserve (MW)
  - Total PJM Synchronized Lost Opportunity Cost Credits ($)
- PJM calculates each Market Participant's hourly Synchronized Reserve Lost Opportunity Cost Charges by RTO zone or active sub-zone and non sub-zone by multiplying the Total PJM Synchronized Lost Opportunity Cost Credits in that location times the Market Participant's Synchronized Reserve Purchase ratio share in that location.
  - Synchronized Reserve Lost Opportunity Cost Charge = Total PJM Synchronized Lost Opportunity Cost Credits * Synchronized Reserve Purchase ratio share
- PJM calculates each Market Participant's hourly Synchronized Reserve Purchases by RTO zone active or sub-zone and non sub-zone based on their Load Ratio Share in the location, adjusted by bilateral Synchronized Reserve sales and purchases minus Synchronized Reserve self-schedule MWs.
  - Synchronized Reserve Purchases = ((Load Ratio Share * Total PJM Real-time Synchronized Reserve assigned)) – Synchronized Reserve MW Purchased + Synchronized Reserve MW Sold – Synchronized Reserve Self-Scheduled MW)) / (Total PJM Real-time Synchronized Reserve assigned – Total PJM self-scheduled Synchronized Reserve used to satisfy a Synchronized Reserve Obligation)

- If the Total PJM Real-time Synchronized Reserve assigned in an hour is zero, the Total PJM Day-ahead Synchronized Reserve assigned is used to determine the Synchronized Reserve Purchase share.

6.3.3 Synchronized Reserve Retroactive Penalty Charge

Resources that fail to provide the Synchronized Reserve they were directed to deploy during a Synchronized Reserve Event incur a retroactive penalty charge. This retroactive penalty charge is determined by multiplying the retroactive penalty MWs times the RT SRMCP for all Real-time Settlement Intervals the resource was assigned or self-scheduled to provide Synchronized Reserve for a duration immediately preceding the Synchronized Reserve Event.

- Retroactive Penalty Charge for resources with a shortfall = Retroactive Penalty MW * RT SRMCP / 12
  - Retroactive Penalty MWs = Min (Synchronized Reserve Shortfall Charge MW, Capped Real-time Synchronized Reserve assignment (as determined and calculated in Section 6.2.2 of the PJM Manual)
  - The duration is equal to the lesser of the average number of days between Events or the number of days since the resource last failed to respond with its PJM-assigned or self-scheduled Synchronized Reserve amount in response to a Synchronized Reserve Event.
  - The average number of days between Events is determined by the annual review of the last two (2) years.
- Market Participants that own multiple resources assigned or self-scheduled to provide Synchronized Reserve are permitted to demonstrate aggregate response, such that any resource that responds greater than the Synchronized Reserve the resource was directed to deploy (pool or self-scheduled) can be used to offset any resource that responds less than the Synchronized Reserve the resource was directed to deploy during a Synchronized Reserve Event.
- The Market Participant’s aggregate response does not affect how an individual resource is credited for Synchronized Reserve it provides as described above, but is used to determine what the Market Participant owes in retroactive penalty charges.
- If there are multiple Synchronized Events during a day, the maximum Retroactive Penalty MWs, per resource, for the day is used to determine what the Market Participant owes in retroactive penalty charges.
- If the Retroactive Shortfall MW value per the above equation is less than 0 MW, the Retroactive Shortfall MW is equal to 0 MW.

The retroactive penalty charges calculated above are allocated based on a Market Participant’s ratio share of the Synchronized Reserve obligation MW for the location and the hour(s) for which the Synchronized Reserve event occurred. If the Event spans multiple hours, the retroactive penalty charges are prorated hourly based on the duration of the Event within each hour. Market Participants that incur a retroactive penalty charge and also have an applicable

Synchronized Reserve Obligation during the hours(s) of the Synchronized Reserve Event are not included in the allocation of such penalties. Additional details on verification and non-performance can be found in PJM Manual 11: Energy & Ancillary Services Market Operations, Section 4.

- Retroactive Penalty Charge for LSEs without a Synchronized Reserve shortfall = Total PJM Retroactive Penalty Charges * -1 * Synch Reserve Obligation Ratio Share excluding the obligations of those receiving a Retroactive Penalty Charge for a performance shortfall.

6.4 Reconciliation for Synchronized Reserve Charges

PJM calculates reconciled Synchronized Reserve charges for EDCs and Retail Load Aggregators (a.k.a. Electric Generation Suppliers) for past monthly billings on a two month lag that are based on Load Ratio Shares. The reconciliation kWh data must be supplied to PJM by the EDCs no later than the last day of the billing month that is two months after the original billing month. For example, all reconciliation data for January must be submitted by March 31 at 23:59. The reconciliation kWh data represents the difference between the scheduled Retail Load Responsibility or Wholesale Load Responsibility InSchedule (in MWh) and the “actual” usage based on metered data. This hourly kWh data must be reported separately for each applicable InSchedule contract.

PJM calculates the Synchronized Reserve charge reconciliations by multiplying the kWh data (de-rated for transmission losses) by the Synchronized Reserve billing determinants for that hour. The hourly Synchronized Reserve charge billing determinants (in $/MWh) for each location (Reserve Zone or active sub-zone and non sub-zone) is calculated by dividing the total hourly Synchronized Reserve charges in that location by the total PJM real-time load (de-rated for transmission losses) in that location for that hour. These charge reconciliations are then totaled for the month for each EDC or Retail Load Aggregator. Note that the reconciliation for Synchronized Reserve charges for a month may be either a positive or a negative value, and may even be such that the reconciled load responsibility MWh results in a negative load quantity.

Section 7: Non-Synchronized Reserve Accounting

Welcome to the Non-Synchronized Reserve Accounting section of the ***PJM Manual for Operating Agreement Accounting***. In this section, you will find the following information:

- A description of how Non-Synchronized Reserve are provided and accounted for in the PJM Energy Markets (see "*Non*-Synchronized Reserve Accounting Overview").
- How credits are calculated for providers of Non-Synchronized Reserve (see "Credits for Non-Synchronized Reserve").
- How the total cost of Non-Synchronized Reserve is allocated (see "Charges for Non-Synchronized Reserve").
- How Non-Synchronized Reserve charge reconciliations are calculated (see "Reconciliation for Non-Synchronized Reserve Charges").

7.1 Non-Synchronized Reserve Accounting Overview

Non-Synchronized Reserve shall be supplied from generation resources located within the metered boundaries of PJM that are off-line and available to fully convert their reserve capability into energy in 10 minutes or less. PJM determines the amount of non-synchronized reserves on each resource.

There is no explicit requirement for Non-Synchronized Reserve. PJM must maintain a total quantity of 10-minute reserve (Primary Reserve) and Synchronized Reserve on the system at all times. Primary Reserves are comprised of Synchronized and Non-Synchronized Reserve. PJM maintains a total Primary Reserve requirement such that a required portion of that Primary Reserve is provided by Synchronized Reserve. The remainder between the Primary Reserve requirement and Synchronized Reserve requirement may be supplied by either additional Synchronized Reserve or Non-Synchronized Reserve, whichever is more economic. Additional details on the Primary and Synchronized Reserve requirements can be found in PJM Manual 13: Emergency Operations.

Non-Synchronized Reserve credits are awarded to resources in both the Day-ahead and Real-time Markets that are assigned to provide Non-Synchronized Reserves by PJM.

Each PJM Market Participant that is a Load Serving Entity (LSE) or a non-synchronized buyer that is not part of an agreement to share reserves with external entities subject to the requirements in NERC Reliability Standard BAL-002 incurs a Non-Synchronized Reserve Obligation based on their Load Ratio Share and applicable location's requirement during that hour. During hours when the Non-Synchronized Reserve Market Clearing Price (NSRMCP) is the same throughout the entire RTO Reserve zone, an LSE's Non-Synchronized Reserve Obligation is equal to its Load Ratio Share of the RTO Reserve zone times the amount of Non-Synchronized Reserve assigned for all Real-time Settlement Intervals for the RTO Reserve

zone. During hours when the NSRMCP is different between the RTO Reserve zone and the Reserve sub-zone, an LSE's Non-Synchronized Reserve Obligation will be calculated based on their load in active sub-zone and/or the portion of the RTO Reserve zone outside of the active sub-zone (the "non sub-zone"). The LSE's active sub-zone Non-Synchronized Reserve Obligation is equal to its Load Ratio Share within that active sub-zone times the amount of Non-Synchronized Reserve assigned in that active sub-zone. The LSE's Synchronized Reserve Obligation in the non sub-zone is equal to its Load Ratio Share in the non sub-zone times the amount of Non-Synchronized Reserve assigned in the non sub-zone portion of the RTO.

Participants may fulfill their Non-Synchronized Reserve Obligations by entering bilateral arrangements with other PJM Market Participants or purchasing non-synchronized reserve from the PJM Non-Synchronized Reserve Market.

7.2 Credits for Non-Synchronized Reserve

Non-Synchronized Reserve credits are paid in both Day-ahead and Real-time Non-Synchronized Reserve Markets to Market Participants that are assigned to provide Non-Synchronized Reserves by PJM. The credits for the Day-ahead and Real-time Non-Synchronized Reserve Markets appear on the billing statement as two separate billing line items:

- Day-ahead Non-Synchronized Reserve Credits = Sum(Day-ahead Non-Synchronized Reserve Market Clearing Price Credits) for the days in the billing period
- Balancing Non-Synchronized Reserve Credits = Sum(Balancing Non-Synchronized Reserve Market Clearing Price Credits + Non-Synchronized Reserve Lost Opportunity Cost Credits) for the days in the billing period

Non-Synchronized Reserve credits for jointly-owned generators that supply Non-Synchronized Reserves are allocated to the owners based on their ownership shares.

7.2.1 Day-ahead Non-Synchronized Reserve Market Clearing Price Credit

Day-ahead Non-Synchronized Reserve Market Clearing Price credits are paid to a generation resource that is assigned Non-Synchronized Reserve MWs within the Day-ahead Market to satisfy the 30-minute Reserve Requirement and/or Primary Reserve Requirement. If a Dayahead Market Suspension occurs, Day-ahead Non-Synchronized Reserve Market Clearing Prices will be set to $0/MWh and Day-ahead Non-Synchronized Reserve assignments will be set to 0 MWh.

PJM Actions

- PJM retrieves the following information for Day-ahead Non-Synchronized Reserve Market Clearing Price credit:
    - Day-ahead Non-Synchronized Reserve assignments (MW)

    - Day-ahead Non-Synchronized Reserve Market Clearing Price (DA NSRMCP) ($/MWh)
- PJM calculates for each hour the Day-ahead Non-Synchronized Reserve Market Clearing Price credit for each eligible resource by multiplying the Day-ahead Non-Synchronized Reserve MWs assigned by the Day-ahead Non-Synchronized Reserve Clearing Price.
    - Day-ahead Non-Synchronized Reserve Market Clearing Price Credit = Day-ahead Non-Synchronized Reserve Assignment * DA NSRMCP

7.2.2. Balancing Non-Synchronized Reserve Market Clearing Price Credit

Balancing Non-Synchronized Reserve Market Clearing Price credits are paid to a generation resource that is assigned Non-Synchronized Reserve within the Real-time Market to satisfy the 30-minute Reserve Requirement and/or Primary Reserve Requirement.

During a Real-time Market Suspension, if PJM is assigning Non-Synchronized Reserves, Balancing Non-Synchronized Reserve Market Clearing Price Credits will be calculated using Real-time Non-Synchronized Reserve Market Clearing Prices calculated per Manual 11, Section 4.4.6.

PJM Actions

- PJM retrieves the following information for the Balancing Non-Synchronized Reserve Market Clearing Price credit:
    - Real-time Non-Synchronized Reserve assignments (MW)
    - Day-ahead Non-Synchronized Reserve assignments (MW)
    - Real-time Non-Synchronized Reserve Market Clearing Price (RT NSRMCP) ($/MWh)
- PJM calculates for each Real-time Settlement Interval the Balancing Non-Synchronized Reserve Market Clearing Price credit for each eligible resource by taking the difference between the Real-time and Day-ahead Non-Synchronized Reserve assignments and multiplying it by the RT NSRMCP, then dividing the product by 12.
    - Balancing Non-Synchronized Reserve Market Clearing Price Credit = ((Real-time Non-Synchronized Reserve Assignment – Day-ahead Non-Synchronized Reserve Assignment) * RT NSRMCP) / 12

7.2.3 Non-Synchronized Reserve Lost Opportunity Cost Credit

PJM calculates the Non-Synchronized Reserve Lost Opportunity Cost Credit for pool-scheduled resources if the Non-Synchronized Reserve Lost Opportunity Cost is greater than the total NSRMCP Credits (Day-ahead and Balancing) received through the Non-Synchronized Reserve Market for each Real-time Settlement Interval. If the resulting amount is negative, then the credit is $0.

PJM Actions

- PJM retrieves the following information for Non-Synchronized Reserve Lost Opportunity Cost credit:
  - Day-ahead Non-Synchronized Reserve Market Clearing Price Credit
  - Balancing Non-Synchronized Reserve Market Clearing Price Credit
  - Market Revenue Neutrality Offset (as determined and calculated in Section 15 of this PJM Manual)
  - Non-Synchronized Reserve Opportunity Cost Credits owed (as determined and calculated in Section 15 of this PJM Manual)
- For each Real-time Settlement Interval, PJM calculates a Non-Synchronized Reserve Lost Opportunity Cost Credit for the resource if the costs associated with that resource are greater than the credits received by the resource.
  - Non-Synchronized Reserve Lost Opportunity Cost Credit = Max(Non-Synchronized Reserve Cost – Non-Synchronized Reserve Credit, 0)
- PJM calculates the cost side of the Non-Synchronized Reserve Lost Opportunity Cost Credit equation as $0, including during a declaration of a Market Suspension. Non-Synchronized Reserves has no offer, nor an opportunity cost for MW committed as reserves rather than energy.
- PJM calculates the credit side of the Non-Synchronized Reserve Lost Opportunity Cost Credit equation as follows:
  - Non-Synchronized Reserve Credit = (Day-ahead Non-Synchronized Reserve Market Clearing Price Credit /12) + (Market Revenue Neutrality Offset + Non-Synchronized Opportunity Cost Credit Owed + Balancing Non-Synchronized Reserve Market Clearing Price Credit)
  - Day-ahead Non-Synchronized Reserve Market Clearing Price Credit = as determined and calculated in Section 7.2.1 of the PJM Manual
  - Market Revenue Neutrality Offset = as determined and calculated in Section 15 of this PJM Manual
  - Non-Synchronized Opportunity Cost Credit Owed = as determined and calculated in Section 15 of this PJM Manual
  - Balancing Non-Synchronized Reserve Market Clearing Price Credit = as determined and calculated in Section 7.2.2 of the PJM Manual

7.3 Charges for Non-Synchronized Reserve

PJM allocates the cost of the total Day-ahead and Balancing Non-Synchronized Reserve credits paid to resources providing Non-Synchronized Reserve as charges to Market Participants with a Non-Synchronized Reserve Obligation in the RTO zone, active sub-zone or non sub-sone as described in section 7.1 of this PJM Manual. PJM calculates charges for the RTO Reserve Zone

when there is no price separation between the RTO Reserve Zone and the active sub-zone, and calculates charges for the active sub-zone and non sub-zone portions of the RTO, rather than for the RTO Reserve Zone, when there is price separation.

Each PJM Market Participant that is a Load Serving Entity (LSE) or non-synchronized buyer that is not part of an agreement to share reserves with external entities subject to the requirements in NERC Reliability Standard BAL-002 incurs a Non-Synchronized Reserve Obligation based on their Load Ratio Share and applicable reserve zone's assignments during that hour. A Load Serving Entity (LSE) whose reserve obligations are satisfied through an agreement to share reserves with external entities subject to the requirements in NERC Reliability Standard BAL-002 does not have a Non-Synchronized Reserve Obligation.

PJM separately allocates the charges associated with Non-Synchronized Reserve Market Clearing Price Credits and Non-Synchronized Reserve Load Opportunity Cost Credits and includes them on the billing statement as one billing line item:

- Non-Synchronized Reserve Charge = Non-Synchronized Reserve Market Clearing Price Charge + Non-Synchronized Reserve Lost Opportunity Cost Charge

7.3.1 Non-Synchronized Reserve Market Clearing Price Charge

PJM Actions

- PJM retrieves the following information for Non-Synchronized Reserve Market Clearing Price Charge:
  - Market Participant's Load Ratio Share
  - Bilateral Non-Synchronized Reserve transactions (sales and purchases) (MW)
  - Total PJM Day-ahead and Real-time Non-Synchronized Reserve assigned (MW)
  - Day-ahead Non-Synchronized Reserve Market Clearing Price Credits ($)
  - Balancing Non-Synchronized Reserve Market Clearing Price Credits ($)
- PJM calculates each Market Participant's hourly Non-Synchronized Reserve Market Clearing Price charges by RTO zone or active sub-zone and non sub-zone in which the load is located by multiplying the Total Non-Synchronized Reserve Market Clearing Price Credits in that location times the Market Participant's Non-Synchronized Reserve Obligation Share in that location.
  - Non-Synchronized Reserve Market Clearing Price Charges = Total Non-Synchronized Reserve Market Clearing Price Credits * Non-Synchronized Reserve Obligation Share
- PJM calculates for each hour the Total Non-Synchronized Reserve Market Clearing Price Credits in the applicable location.
  - Total Non-Synchronized Reserve Market Clearing Price Credits = Day-ahead Non-Synchronized Reserve Market Clearing Price Credits + Balancing Non-Synchronized Reserve Market Clearing Price Credits

- PJM calculates each Market Participant's hourly Non-Synchronized Reserve Obligation Share by RTO zone or active sub-zone and non sub-zone based on their Load Ratio Share in that location, adjusted by bilateral Non-Synchronized Reserve sales and purchases.
  - Non-Synchronized Reserve Obligation Share = ((Load Ratio Share * Total PJM Real-time Non-Synchronized Reserve assigned) – Non-Synchronized Reserve MW Purchased + Non-Synchronized Reserve MW Sold) / Total PJM Real-time Non-Synchronized Reserve assigned
  - If the Total PJM Real-time Non-Synchronized Reserve assigned in an hour is zero, the Total PJM Day-ahead Non-Synchronized Reserve assigned is used to determine the Non-Synchronized Reserve Obligation Share.

7.3.2 Non-Synchronized Lost Opportunity Cost Charge

PJM Actions

- PJM retrieves the following information for Non-Synchronized Reserve Lost Opportunity Cost Charge:
  - Market Participant's Load Ratio Share
  - Bilateral Non-Synchronized Reserve transactions (sales and purchases) (MW)
  - Total PJM Day-ahead and Real-time Non-Synchronized Reserve assigned
  - Total PJM Non-Synchronized Lost Opportunity Cost Credits
- PJM calculates each Market Participant's hourly Non-Synchronized Reserve Lost Opportunity Cost Charges by RTO zone or active sub-zone and non sub-zone by multiplying the Total PJM Non-Synchronized Lost Opportunity Cost Credits in that location times the Non-Synchronized Reserve Purchases ratio share in that location.
  - Non-Synchronized Reserve Lost Opportunity Cost Charge = Total PJM Non-Synchronized Lost Opportunity Cost Credits * Non-Synchronized Reserve Purchases ratio share
- PJM calculates each Market Participant's hourly Non-Synchronized Reserve Purchases by RTO zone or active sub-zone and non sub-zone based on their Load Ratio Share in that location, adjusted by bilateral Non-Synchronized Reserve sales and purchases .
  - Non-Synchronized Reserve Purchases = (((Load Ratio Share * Total PJM Real-time Non-Synchronized Reserve assigned) – Non-Synchronized Reserve MW Purchased + Non-Synchronized Reserve MW Sold)) / Total PJM Real-time Synchronized Reserve assigned
    - If the Total PJM Real-time Non-Synchronized Reserve assigned in an hour is zero, the Total PJM Day-ahead Non-Synchronized Reserve assigned is used to determine the Non-Synchronized Reserve Purchases share.

7.4 Reconciliation for Non-Synchronized Reserve Charges

PJM will calculate reconciled Non-Synchronized Reserve charges for EDCs and Retail Load Aggregators (a.k.a. Electric Generation Suppliers) for past monthly billings on a two month lag that were based on Load Ratio Shares. The reconciliation kWh data must be supplied to PJM by the EDCs no later than the last day of the billing month that is two months after the original billing month. For example, all reconciliation data for January must be submitted by March 31 at 23:59. The reconciliation kWh data represents the difference between the scheduled Retail Load Responsibility or Wholesale Load Responsibility InSchedule (in MWh) and the “actual” usage based on metered data. This hourly kWh data must be reported separately for each applicable InSchedule contract.

PJM calculates the Non-Synchronized Reserve charge reconciliations by multiplying the kWh data (de-rated for transmission losses) by the Non-Synchronized Reserve billing determinants for that hour. The hourly Non-Synchronized Reserve charge billing determinant (in $/MWh) for each location (Reserve Zone or active sub-zone and non sub-zone) is calculated by dividing the total hourly Non-Synchronized Reserve charges in that location by the total PJM real-time load (de-rated for transmission losses) in that location for that hour. These charge reconciliations are then totaled for the month for each EDC or Retail Load Aggregator. Note that the reconciliation for Non-Synchronized Reserve charges for a month may be either a positive or a negative value and may even be such that the reconciled load responsibility MWh results in a negative load quantity.

Section 8: Transmission Congestion Accounting Overview

Welcome to the Transmission Congestion Accounting section of the ***PJM Manual for Operating Agreement Accounting***. In this section, you will find the following information:

- A general description of how charges and credits are calculated when the transmission system is scheduled or operated under constrained conditions (see “Transmission Congestion Accounting Overview”).
- How Transmission Congestion Charges are calculated (see “Transmission Congestion Charges”).
- How Transmission Congestion Credits are calculated (see “Transmission Congestion Credits”).

8.1 Transmission Congestion Accounting Overview

When the Transmission System is scheduled day-ahead or operating real-time under constrained conditions, PJM calculates Congestion Charges for each PJM Member. The basis for the Congestion Charge is the applicable day-ahead or real-time congestion price component of LMPs. PJM calculates day-ahead locational Congestion Prices for every Day-ahead Settlement Interval (hourly interval) and real-time locational Congestion Prices for every Real-time Settlement Interval (five minute interval). Every PJM Member is charged for the cost of congestion on the Transmission System, based on the difference between the congestion price at the location on the Transmission System where the PJM Member injects energy and the congestion price at the location where the PJM Member withdraws energy.

The following calculations are performed:

- Day-ahead and Balancing Transmission Congestion Charges (implicit and explicit) for each PJM Member are calculated.
- FTR Target Allocations are determined and totaled for each FTR holder for each hour.
- The Total Day- Ahead Transmission Congestion Charges for the hour are calculated and allocated to FTR holders as Day-Ahead Transmission Congestion Credits based on FTR Target Allocations.
- The Total Balancing Transmission Congestion Charges for the hour are the sum of the Balancing Transmission Congestion charges for all five minute intervals in the hour and are allocated as Balancing Transmission Congestion credits based on real-time load (excluding losses) plus exports transaction ratio shares.
- At the end of each month, any Excess Congestion Charges are distributed as additional Day-Ahead Transmission Congestion Credits to FTR holders with Congestion Credit Deficiencies in that month or in previous months of the current planning period.

- Any revenue deficient transmission rights (ARRs or FTRs) remaining at the end of the Planning Period are satisfied through a transmission rights uplift charge which is allocated to FTR holders on a pro-rata basis according to their net FTR target allocation position, relative to the total net FTR target allocation positions of all FTR holders in the PJM Interchange Energy Market. An entity with a net negative FTR target allocation position is not subject to transmission rights uplift allocation charges.
- Any Excess Congestion Charges that remain unallocated at the end of the planning period are used to satisfy any ARR deficiencies that may exist.
- Any Excess Congestion Charges that remain unallocated at the end of the planning period after the distribution to deficient ARR holders are allocated proportionately to ARR holders with net positive ARR target allocations for that planning period.

8.2 Transmission Congestion Charges

Transmission Congestion Charges are made up of two types:

- Implicit — Implicit Congestion Charges are the congestion charges associated with the congestion price differentials between the PJM Member's generation and scheduled purchases, netted out against its load (excluding losses) and scheduled sales.
- Explicit — Explicit Congestion Charges are the congestion charges associated with the congestion price differential from the scheduled source and sink of a transaction. The Transmission Customer pays the Congestion Charges for external transactions. The buyer pays the explicit Congestion Charges for internal transactions. The market participant pays the explicit Congestion Charges for up-to congestion transactions.

Transmission Congestion Charges can be both positive and negative.

8.2.1 Implicit Transmission Congestion Charges

Implicit Transmission Congestion Charges are the congestion charges for moving energy injections to energy withdrawals across a constrained system.

The Implicit Transmission Congestion Charges represent a PJM Member's total congestion obligation during a constraint, including both physical and scheduled energy. It is the difference between a PJM Member's total withdrawal congestion payment and its total injection congestion revenue. There are two primary components to the Day-ahead Implicit Transmission Congestion Charges.

- Day-Ahead Injection Credits — Day-ahead injection credits are calculated every hour for all cleared generation and increment offers and day-ahead energy purchase transactions. Day-ahead injection credits are calculated at the generator bus congestion price, increment offer congestion price, or the congestion price at the sink of the purchase transaction, as applicable.

- Day-Ahead Withdrawal Charges — Day-ahead withdrawal charges are calculated for every hour for all cleared demand and decrement bids and day-ahead energy sale transactions. Day-ahead withdrawal charges are calculated at the load aggregate congestion price, decrement bid congestion price, or the congestion price at the source of the sale transaction, as applicable.
- If a Day-ahead Market Suspension occurs, the Day-ahead locational congestion price will be set to $0/MWh and Day-ahead energy withdrawals and Day-ahead energy injections will be set to 0 MWh for all hours of the Operating Day.

Each PJM Member's hourly Day-ahead Implicit Transmission Congestion Charges (positive or negative) equals their day-ahead withdrawal charges minus their day-ahead injection credits for that hour.

There are two primary components to the Balancing Implicit Transmission Congestion Charges.

- Balancing Injection Credits — Balancing injection credits are calculated for every five minute interval for all deviations between a PJM Member's real-time generation and energy purchase transactions and their day-ahead generation, increment, and energy purchase transactions. PJM takes the hourly sum of each Market Participant's scheduled day-ahead energy injections and flat-profiles this value across each of the five minute intervals of the hour to obtain five minute interval day-ahead scheduled injections. Day-ahead imports can be scheduled sub-hourly and are set equal to the MW value for each of the five minute intervals that the transaction is scheduled and adjusted for any curtailment in the day-ahead energy market. Balancing injection credits are calculated for each bus or aggregate at which a real-time deviation from its day-ahead scheduled injection exists using the congestion price at the applicable bus or aggregate.
- Balancing Withdrawal Charges — Balancing withdrawal charges are calculated for every five minute interval for all deviations between a PJM Member's real-time load (de-rated for transmission losses) and energy sale transactions and their day-ahead demand, decrement, and energy sale transactions. PJM takes the hourly sum of each Market Participant's scheduled day-ahead energy withdrawals and flat-profiles this value across each of the five minute intervals of the hour to obtain five minute interval day-ahead scheduled withdrawals. Day-ahead exports can be scheduled sub-hourly and are set equal to the MW value for each of the five minute intervals that the transaction is scheduled and adjusted for any curtailment in the day-ahead energy market. Balancing withdrawal charges are calculated at the applicable bus or aggregate at which a real-time deviation from its day-ahead scheduled withdrawal exists using the congestion price at the applicable bus or aggregate.
- During a Real-time Market Suspension, Balancing Implicit Congestion Charges will be calculated using Real-time congestion prices calculated per Manual 11, Section 2.21. Real-time Congestion Prices will be $0/MWh for Real-time Market Suspensions greater than 24 consecutive hours.

Each PJM Member's five minute interval balancing implicit congestion charges (positive or negative) equals their balancing withdrawal charges minus their balancing injection credits for that five minute interval.

PJM Actions

- PJM retrieves the following information:
  - demand and decrement bids cleared day-ahead (MWh)
  - generation schedules and increment offers cleared day-ahead (MWh)
  - each PJM Member's percentage of joint owned units (% ownership)
  - day-ahead external and internal energy transactions (MWh)
  - sub-hourly day-ahead import and export schedule details
  - real-time external and internal energy five minute interval transactions (MW)
  - real-time load (MW) for the applicable load aggregate
  - five minute revenue meter generation MW values from PJM Power Meter if available
  - state estimator or telemetry generation MW scaled to match hourly revenue generation meter data from Power Meter as described in Section 1A of this PJM Manual
  - hourly day-ahead and five minute real-time Congestion Prices ($/MWh)
- PJM calculates the day-ahead withdrawal charges for each PJM Member for each of their day-ahead demand, decrement, and sale transactions as follows:

$$\begin{gathered}\textit{Day-ahead withdrawal Charge} = \\ \textit{Day-ahead Demand MWh} * \textit{Day-ahead Load Aggregate Congestion Price} \\ \textit{OR} \\ \textit{Decrement Transaction MWh} * \textit{Day-ahead Congestion Price} \\ \textit{OR} \\ \textit{Day-ahead Sale Transaction MWh} * \textit{Source Day-ahead Congestion Price}\end{gathered}$$

- PJM calculates day-ahead injection credits for each PJM Member for each of their day-ahead generation, increment, and purchase transactions as follows:

$$\begin{gathered}\textit{Day-ahead Injection Credit} = \\ \textit{Day-ahead Generation MWh} * \textit{\% Ownership} * \textit{Day-ahead Gen Bus Congestion Price} \\ \textit{OR} \\ \textit{Increment Transaction MWh} * \textit{Day-ahead Congestion Price} \\ \textit{OR} \\ \textit{Day-ahead Purchase Transaction MWh} * \textit{sink Day-ahead Congestion Price}\end{gathered}$$

- PJM calculates each PJM Member's hourly Day-ahead Implicit Transmission Congestion Charge as the sum of their day-ahead withdrawal charges minus the sum of their day-ahead injection credits.

Note:
Day-ahead implicit congestion charges are only calculated for market participants whose day-ahead spot market interchange includes actual or scheduled sources or sinks that reflect different congestion prices.

- PJM calculates the five minute balancing withdrawal charges for each PJM Member for the applicable bus or aggregate as follows:

*Balancing Withdrawal Charge = (Real-time loss de-rated Load MW + Real-time Sale Transaction MW – Day-ahead Demand MW – Decrement Transaction MW – Day-ahead Sale Transaction MW) * Real-Time Bus or Aggregate Congestion Price / 12*

- PJM calculates five minute balancing injection credits for each PJM Member for each bus or aggregate as follows:

*Balancing Injection Credit = (Real-time Generation MW * % Ownership + Real-time Purchase Transaction MW – Day-ahead Generation MW * % Ownership – Increment Transaction MW – Day-ahead Purchase Transaction MW) * Real-Time Bus or Aggregate Congestion Price / 12*

- PJM calculates each PJM Member's five minute interval Balancing Implicit Transmission Congestion Charge as the sum of their balancing withdrawal charges for the five minute interval minus the sum of their balancing injection credits for the five minute interval.

Note:
Balancing implicit congestion charges are only calculated for market participants whose real-time spot market interchange includes actual or scheduled sources or sinks that reflect different congestion prices.

8.2.2 Explicit Transmission Congestion Charges

Explicit Transmission Congestion Charges are the congestion charges for moving energy across the Transmission System during a constraint. Explicit congestion charges equal the difference between the source and sink Congestion Prices of a transaction.

- Internal Purchases — For internal purchases, the Explicit Congestion Charges are calculated based on the differences in Congestion Prices between their sink aggregates and source aggregates. The buyer pays the Explicit Congestion Charges associated with an internal transaction.
- External Transactions — For point-to-point and network secondary transmission customers, the Explicit Congestion Charges are calculated based on the difference between the sink Congestion Price and the source Congestion Price. The Transmission Customer pays the explicit Congestion Charges associated with an import, export, or wheel transaction.
- Up-to congestion transactions – For up-to congestion transactions, the Explicit Congestion Charges are calculated based on the difference between the sink Congestion Price and

the source Congestion Price. The market participant pays the Explicit Congestion Charges associated with an up-to congestion transaction.

PJM Actions

- PJM retrieves the following information:
  - transmission service reservations (MW, period, and source/sink)
  - day-ahead up-to congestion, external, and internal energy transactions (MWh)
  - sub-hourly day-ahead import and export schedule details
  - real-time external and internal energy five minute interval transactions (MW)
  - hourly day-ahead and five minute real-time Congestion Prices ($/MWh)
- PJM calculates the hourly Day-ahead Explicit Congestion Charge for each transaction as:

*Day-ahead Explicit Congestion Charge = Day-ahead Transaction MWh * (Sink Day-ahead Congestion Price – Source Day-ahead Congestion Price)*

- PJM calculates the five minute Balancing Explicit Congestion Charge for each transaction as:

*Five Minute Balancing Explicit Congestion Charge = (Real-time Transaction MW – Day-ahead Transaction MW) * (Sink Real-time Congestion Price – Source Real-time Congestion Price) / 12*

8.3 Reconciliation for Transmission Congestion Charges

PJM will calculate reconciled Transmission Congestion charges for EDCs and Retail Load Aggregators (a.k.a. Electric Generation Suppliers) for past monthly billings on a two month lag. The reconciliation kWh data must be supplied to PJM by the EDCs no later than the last day of the billing month that is two months after the original billing month. For example, all reconciliation data for January must be submitted by March 31 at 23:59 represents the difference between the scheduled Retail Load Responsibility or Wholesale Load Responsibility InSchedule (in MWh) and the “actual” usage based on metered data. This hourly kWh data must be reported separately for each applicable InSchedule contract.

As part of the reconciliation process, residual metered load aggregate distribution factors are updated based on reconciliation kWh data for load responsibility InSchedules priced at nodal aggregates. An adjusted distribution congestion rate for residual metered load aggregates is then calculated as the difference between the Real-time Congestion Price that is calculated using the updated distribution factors and the original Real-time Congestion Price. This adjusted distribution congestion rate is only calculated for residual metered load aggregates.

PJM calculates the Transmission Congestion charge reconciliations by multiplying the kWh data (de-rated for transmission losses) by the Real-time Congestion Price plus the adjusted distribution congestion rate at the aggregate sink bus associated with the InSchedule contract for that hour.

For those InSchedule contracts where the aggregate sink bus is a residual metered load aggregate, PJM calculates additional Transmission Congestion charge reconciliations by multiplying the scheduled Retail Load Responsibility InSchedule (in MWh) by the adjusted distribution congestion rate. These charge reconciliations are then totaled for the month for each EDC or Retail Load Aggregator. Note that the reconciliation for Transmission Congestion charges for a month may be either a positive or a negative value, and may even be such that the reconciled load responsibility MWh results in a negative load quantity.

8.4 Transmission Congestion Credits

Each Market Participant who holds Financial Transmission Rights receives Day-Ahead Transmission Congestion Credits, which is a share of the Total Day-Ahead Transmission Congestion Charges collected for each constrained hour. Each FTR holder's Day-Ahead Transmission Congestion Credits are calculated based upon the Financial Transmission Rights (FTRs) it holds.

8.4.1 FTRs and FTR Target Allocations

An FTR is a financial instrument that entitles the holder to receive compensation for Transmission Congestion Charges that arise when the Transmission System is congested and differences in day-ahead Congestion Prices result. The purpose of an FTR is to protect the holder from increased energy costs due to transmission congestion. Each FTR is defined from a point of receipt to a point of delivery. For each hour in which congestion exists on the day-ahead Transmission System between the receipt and delivery points specified in the FTR, the holder of the FTR is awarded a share of the Total Day-Ahead Transmission Congestion Charges collected from the Market Participants. An FTR's value, therefore, is related to Day-Ahead Transmission Congestion Charges as described in PJM Manual 6: Financial Transmission Rights.

FTR Target Allocations are the amounts of credit each FTR holder should receive in each constrained hour due to the value of its FTRs. The FTR Target Allocation is calculated for each FTR in each hour by multiplying the MW value of the FTR times the sink Day-ahead Congestion Price minus the source Day-ahead Congestion Price. The total FTR Target Allocation for each FTR holder is the sum of the FTR Target Allocations for all FTRs that it holds. A Market Participant's net FTR Target Allocation for an hour may be either a positive or a negative value.

If a Day-ahead Market Suspension occurs resulting in no Day-ahead Prices available for the affected Operating Day, the Day-ahead Congestion Price will be substituted with the hourly integrated Real-time Congestion Price for the FTR Target Allocation calculation. If a Day-ahead Market Suspension occurs and there is also a Real-time Market Suspension where the Realtime suspension is greater than twenty-four (24) consecutive hours, resulting in no Day-ahead or Real-time Congestion Prices, the FTR Target Allocation will be zero for the hours corresponding to the Real-time Market Suspension interval.

8.4.2 Total Day-Ahead Transmission Congestion Charges

The Total Day-Ahead Transmission Congestion Charges are the sum of the Day-ahead Congestion Charges for all PJM Members, adjusted for the value of day-ahead congestion revenues due to the MISO and NYISO joint operating agreement coordination, minus the negatively valued FTR Target Allocations.

PJM Actions

- PJM calculates the hourly Total Day-Ahead Transmission Congestion Charges by summing the following:
  - day-ahead implicit congestion charges ($)
  - day-ahead explicit congestion charges ($)
  - MISO and NYISO joint operating agreement Day-Ahead congestion value ($)
- And then subtracting:
  - the total of all Market Participants' FTR Target Allocations where the net total FTR Target Allocation for that customer in the hour is a negative value ($)

8.4.3 Hourly Allocation of Total Day-Ahead Transmission Congestion Charges

Total Day-Ahead Transmission Congestion Charges (including the negative Target Allocations) are allocated back to FTR holders based on their positive FTR Target Allocations. Market Participants with net negative FTR Target Allocations in an hour will always receive 100% of their FTR Target Allocations as negative Day-Ahead Transmission Congestion Credits for that hour. The inclusion of these negative credits in the calculation of Total Day-Ahead Transmission Congestion Charges effectively increases the amount that is available to be allocated as credits to the FTR holders with positive FTR Target Allocations.

If the Total Day-Ahead Transmission Congestion Charges for an hour are greater than the total positive FTR Target Allocations, then there will be funds remaining in the hour after the distribution of Day-Ahead Transmission Congestion Credits. These funds are called Excess Congestion Charges. Sometimes the calculation of Total Day-Ahead Transmission Congestion Charges for an hour can result in a negative value. When this occurs, no positive Day-Ahead Transmission Congestion Credits would be awarded, and the Total Day-Ahead Transmission Congestion Charges for the hour would be treated as negative excess congestion charges. The hourly Excess Congestion Charges and the hourly negative Total Day-Ahead Transmission Congestion Charges are accumulated for the month to be distributed in a second allocation at the end of the month.

PJM Actions

- PJM accounting process retrieves the following information:
  - hourly Total Day-Ahead Transmission Congestion Charge ($)
  - each Market Participant's hourly FTR Target Allocations ($)

- PJM accounting process calculates the total positive FTR Target Allocation by summing the following values:
  - sum of all market participants' FTR Target Allocations where the net total FTR Target Allocation for that customer in the hour is a positive value
- If the Total Day-Ahead Transmission Congestion Charge is a positive value that is greater than or equal to the total positive FTR Target Allocation for the hour, the Day-Ahead Transmission Congestion Credits for each FTR holder is equal to its FTR Target Allocations and the Congestion Credit Deficiency for each FTR holder is zero. The Excess Congestion Charge is equal to the Total Day-Ahead Transmission Congestion Charge minus the Total positive FTR Target Allocations.
- If the Total Day-Ahead Transmission Congestion Charge is a positive value that is less than the total positive FTR Target Allocation for the hour, then the Day-Ahead Transmission Congestion Credit for each market participant is equal to that Market Participant's FTR Positive Target Allocation multiplied by the Total Day-Ahead Transmission Congestion Charge and divided by the Total PJM positive FTR Target Allocations for the Market Participant's positive FTR Target Allocation, and is equal to 100% of the Market Participant's FTR Target Allocation for the market participant's negative FTR Target Allocation. Each Market Participant's hourly Congestion Credit Deficiency is calculated as its FTR Target Allocation minus its hourly Day-Ahead Transmission Congestion Credit.
- If the Total Day-Ahead Transmission Congestion Charge is a negative value, then the Transmission Congestion Credit for each Market Participant is equal to 100% of that Market Participant's FTR Target Allocation if the Transmission Customer's FTR Target Allocation is a negative value, and is equal to $0.00 if the Market Participant's FTR Target Allocation is a positive value. Each Market Participant's hourly Congestion Credit Deficiency is equal to its FTR Target Allocation if the FTR Target Allocation is a positive value.

8.4.4 Monthly Allocation of Excess Congestion Charges

The objectives of the monthly Excess Congestion Charge distribution are to cover any deficiency in Day-Ahead Transmission Congestion Credits received by each FTR holder when compared to its FTR Target Allocations, and to distribute any remaining excess at the end of the planning period first to ARR holders in proportion to ARR deficiencies and then to all ARR holders. The monthly allocation is performed in five stages.

- Stage One —Any revenues paid to or received from MISO and NYISO for JOA market-to-market congestion relief measures are also applied to the applicable hours' Day-Ahead congestion revenues.

PJM calculates the monthly total Excess Congestion Charge by summing the Excess Congestion Charge for each hour of the month and subtracting the Total Day-Ahead Transmission Congestion Charge for each hour of the month in which the Total Day-Ahead Congestion Transmission Charge was negative. PJM then distributes the monthly Total Excess

Congestion Charge plus any net long-term, annual or monthly FTR Auction revenues in excess of ARR Target Allocations for that month as additional Day-Ahead Transmission Congestion Credits to each FTR holder in proportion to, but not greater than, the sum of the hourly Congestion Credit Deficiencies in that month. If the monthly total Excess Congestion Charge is a negative value, no additional Day-Ahead Transmission Congestion Credits can be allocated, and the negative monthly total Excess Congestion Charge would be allocated as a positive charge to Day-Ahead Operating Reserve.

PJM calculates the final monthly Congestion Credit Deficiency for each FTR holder as the difference between, the sum of the Transmission Customer's total FTR Target Allocations for the month minus the sum of all Day-Ahead Transmission Congestion Credits distributed either hourly or monthly to that FTR holder.

- Stage Two — If there is any monthly total Excess Congestion Charge remaining after the stage one distribution, PJM distributes that remaining excess as additional Transmission Congestion Credits to each FTR holder in proportion to, but not greater than, the final monthly Congestion Credit Deficiencies from previous months of that PJM planning period (June 1 to May 31). The final monthly Congestion Credit Deficiencies for each FTR holder in each month are then updated to reflect the additional Transmission Congestion Credits received.
- Stage Three — If any monthly total Excess Congestion Charge remains after the stage two distribution, that remaining excess is carried forward to be allocated to FTR holders with monthly Congestion Credit Deficiencies in future months of the PJM planning period.
- Stage Four — At the end of the PJM planning period, PJM distributes any Excess Congestion Charges remaining after the stage three distribution to ARR holders in proportion to any ARR deficiency that may exist over such period.
- Stage Five –
    - At the end of the PJM planning period, any Excess Congestion Charges remaining after the stage four distribution are allocated proportionately to ARR holders with net positive ARR target allocations for that planning period.
    - Any revenue deficient transmission rights (ARRs or FTRs) remaining at the end of the Planning Period are satisfied through a transmission rights uplift charge which is allocated to FTR holders on a pro-rata basis according to their net FTR target allocation position, relative to the total net FTR target allocation positions of all FTR holders in the PJM Interchange Energy Market. An entity with a net negative FTR target allocation position is not subject to transmission rights uplift allocation charges.

8.4.5 Total Balancing Transmission Congestion Charges

The Total Balancing Transmission Congestion Charges are the sum of the Balancing Congestion Charges for all PJM Members, adjusted for the value of Real Time congestion revenues due to inadvertent interchange, the MISO and NYISO joint operating agreement coordination, and the pseudo tie balancing congestion refund charge.

PJM Actions:

- PJM calculates the hourly Total Balancing Transmission Congestion Charges by summing the following:
  - balancing implicit congestion charges ($)
  - balancing explicit congestion charges ($)
  - inadvertent interchange congestion value ($)
  - MISO and NYISO joint operating agreement Real Time congestion value ($)
  - pseudo tie balancing congestion refund charge ($)

8.4.6 Balancing Transmission Congestion Credits

The Total Balancing Transmission Congestion Charges is allocated among the PJM Market participants in proportion to their real-time load (de-rated for transmission losses) plus their real-time PJM exports as a percentage of the total PJM load (excluding losses) and exports.

If only a Day-ahead Market Suspension occurs, or a Day-ahead Market Suspension and a Realtime Market Suspension occurs, where the Real-time suspension is less than or equal to twenty-four (24) consecutive hours, the Total Balancing Transmission Congestion Charges is allocated to FTR Target Allocations as described in Section 8.4.3 for each hour of the Operating Day. Any Total Balancing Transmission Congestion Charges remaining after the allocation to FTR Target Allocations is allocated to real-time load plus real-time PJM exports.

PJM Actions:

- PJM accounting process retrieves the following information:
  - hourly real-time load (excluding losses) for each LSE (MWh)
  - hourly real-time PJM export schedules for each Market Participant (MWh)
  - each Market participant's balancing transmission congestion charges ($)
  - inadvertent interchange congestion value ($)
  - MISO and NYISO joint operating agreement Real Time congestion value ($)
- PJM accounting process calculates the total hourly balancing transmission congestion charges by summing the balancing transmission congestion charges for each Market Participant, including an adjustment for the inadvertent interchange transmission congestion value, and the MISO and NYISO joint operating agreement Real Time congestion values.
- PJM accounting process calculates the hourly real-time load (excluding losses) plus export ratio of each Market Participant.
- PJM accounting process allocates the total hourly balancing transmission congestion charges as hourly balancing transmission congestion credits for each Market Participant based on their hourly real-time load (excluding losses) plus export ratio share.

8.4.7 Reconciliation for Balancing Transmission Congestion Credits

PJM will calculate reconciled Balancing Transmission Congestion credits for EDCs and Retail Load Aggregators (a.k.a. Electric Generation Suppliers) for past monthly billings on a two month lag that were based on Load Ratio Shares. The reconciliation kWh data must be supplied to PJM by the EDCs no later than the last day of the billing month that is two months after the original billing month. For example, all reconciliation data for January must be submitted by March 31 at 23:59. The reconciliation kWh data represents the difference between the scheduled Retail Load Responsibility or Wholesale Load Responsibility InSchedule (in MWh) and the "actual" usage based on metered data. This hourly kWh data must be reported separately for each applicable InSchedule contract.

PJM calculates the Balancing Transmission Congestion credit reconciliations by multiplying the kWh data (de-rated for transmission losses) by the Balancing Transmission Congestion Credit billing determinant for that hour. The hourly Balancing Transmission Congestion Credit billing determinants (in $/MWh) are calculated by dividing the total Balancing Transmission Congestion Charges for an hour by the total PJM real-time load (de-rated for transmission losses) and exports in that hour. These credit reconciliations are then totaled for the month for each EDC or Retail Load Aggregator. Note that the reconciliation for Balancing Transmission Congestion credits for a month may be either a positive or a negative value, and may even be such that the reconciled load responsibility MWh results in a negative load quantity.

8.5 Reassignment of Financial Transmission Rights (FTRs)

A transitional FTR Allocation will be conducted for new zone load being added as a result of new market integration. This transitional allocation of FTRs will cover the period of time between the implementation of the new zone added and the next Annual ARR Allocation in which the new member elects to participate. The new member, at their election, will have until the second Annual FTR Auction after they join PJM to participate in the Annual FTR Auction.

For a transitional period, Network and Firm Transmission Customers that take service that sinks in new PJM zones, at their election, may receive a direct allocation of Financial Transmission Rights instead of an allocation of Auction Revenue Rights. This transitional period covers the succeeding two Annual FTR Auctions after the integration of the new zone into the PJM interchange energy market. The election of a direct FTR Allocation shall be made prior to the commencement of each Annual FTR Auction.

Network and Firm Transmission Customers in new PJM zones that elect not to receive direct allocations of Financial Transmission Rights may receive allocations of Auction Revenue Rights. Network and Firm Transmission Customers in new PJM zones must choose to receive either an FTR Allocation or an ARR Allocation. A Network or Firm Transmission Customer cannot choose to receive both an FTR Allocation and an ARR Allocation.

FTRs allocated for the transition period will be reassigned on a proportional basis within a transmission zone or load aggregation zone as load switches between LSEs within the

transition period. The reassignment of FTRs is an automatic process, which is conducted by PJM on a daily basis (or as frequently as necessary). An LSE that loses load will lose a pro-rata share of their FTRs in proportion to the amount of load lost.

The total set of FTRs lost by LSEs losing load in a transmission zone or load aggregation zone will be reallocated to LSEs gaining load in the zone or load aggregation zone in proportion to each LSEs MW load gain relative to the total load shifted in the zone or load aggregation zone.

Section 9: Transmission Losses Accounting

Welcome to the Transmission Losses Accounting section of the ***PJM Manual for Operating Agreement Accounting***. In this section, you will find the following information:

- How transmission losses are accounted for (see “Transmission Losses Accounting Overview”).
- How Market Participants are charged for losses (see “Transmission Loss Charges”).
- How PJM Market Participants receive credits for the collected loss charges (see “Transmission Loss Credits”).
- How transmission loss charge reconciliations are calculated (see “Reconciliation for Transmission Loss Charges”).
- How transmission loss credit reconciliations are calculated (see “Reconciliation for Transmission Loss Credits”).

9.1 Transmission Losses Accounting Overview

Transmission losses refer to the loss of energy in the transmission of electricity from generation resources to load, which is dissipated as heat through transformers, transmission lines, and other transmission facilities. Only the losses incurred on facilities included in the PJM network model and, therefore, reflected in the PJM State Estimator are included in the PJM settlements for transmission losses.

PJM calculates Transmission Loss Charges for each PJM Member. The basis for the Loss Charge is the applicable day-ahead or real-time loss price component of LMPs. PJM calculates day-ahead locational loss prices for every Day-ahead Settlement Interval (hourly interval) and real-time locational Loss Prices for every Real-time Settlement Interval (five minute interval). Every PJM Member is charged for the cost of losses on the Transmission System, based on the difference between the loss price at the location on the Transmission System where the PJM Member injects energy and the loss price at the location where the PJM Member withdraws energy.

The following calculations are performed:

- Day-ahead and Balancing Transmission Loss Charges (implicit and explicit) for each PJM Member are calculated.
- The Total PJM Loss Charges for the hour are calculated and allocated as Transmission Loss Credits based on load (excluding losses) plus export transaction ratio shares, where exports are only those that pay for transmission service and non-firm exports get a reduced allocation due to the non-firm point-to-point transmission service rate is less than the firm rate.

9.2 Transmission Loss Charges

Transmission Loss Charges are made up of two types:

- Implicit — Implicit Loss Charges are the loss charges associated with the loss price differentials between the PJM Member's generation and scheduled purchases, netted out against its load (excluding losses) and scheduled sales.
- Explicit — Explicit Loss Charges are the loss charges associated with the loss price differential from the scheduled source and sink of a transaction. The Transmission Customer pays the Loss Charges for external transactions. The buyer pays the explicit Loss Charges for internal transactions. The market participation pays the explicit Loss Charges for up-to congestion transactions.

Transmission Loss Charges can be both positive and negative.

9.2.1 Implicit Transmission Loss Charges

Implicit Transmission Loss Charges are the loss charges for moving energy injections to energy withdrawals across the system.

The Implicit Transmission Loss Charges represent a PJM Member's total loss obligation, including both physical and scheduled energy. It is the difference between a PJM Member's total withdrawal loss payment and its total injection loss revenue. There are two primary components to the Day-ahead Implicit Transmission Loss Charges.

- Day-Ahead Injection Credits — Day-ahead injection credits are calculated every hour for all cleared generation and increment offers and day-ahead energy purchase transactions. Day-ahead injection credits are calculated at the generator bus loss price, increment offer loss price, or the loss price at the sink of the purchase transaction, as applicable.
- Day-Ahead Withdrawal Charges — Day-ahead withdrawal charges are calculated every hour for all cleared demand and decrement bids and day-ahead energy sale transactions. Day-ahead withdrawal charges are calculated at the load aggregate loss price, decrement bid loss price, or the loss price at the source of the sale transaction, as applicable.
- If a Day-ahead Market Suspension occurs, the Day-ahead locational loss price will be set to $0/MWh and Day-ahead energy withdrawals and Day-ahead energy injections will be set to 0 MWh for all hours of the Operating Day.

Each PJM Member's hourly Day-ahead Implicit Transmission Loss Charges (positive or negative) equals their day-ahead withdrawal charges minus their day-ahead injection credits for that hour.

There are two primary components to the Balancing Implicit Transmission Loss Charges.

- Balancing Injection Credits — Balancing injection credits are calculated for every five minute interval for all deviations between a PJM Member's real-time generation and energy purchase transactions and their day-ahead generation, increment, and energy

purchase transactions. PJM takes the hourly sum of each Market Participant's scheduled day-ahead energy injections and flat-profiles this value across each of the five minute intervals of the hour to obtain five minute interval day-ahead scheduled injections. Day-ahead imports can be scheduled sub-hourly and are set equal to the MW value for each of the five minute intervals that the transaction is scheduled and adjusted for any curtailment in the day-ahead energy market. Balancing injection credits are calculated for each bus or aggregate at which a real-time deviation from its day-ahead scheduled injection exists using the loss price at the applicable bus or aggregate.

- Balancing Withdrawal Charges — Balancing withdrawal charges are calculated for every five minute interval for all deviations between a PJM Member's real-time load (de-rated for transmission losses) and energy sale transactions and their day-ahead demand, decrement, and energy sale transactions. PJM takes the hourly sum of each Market Participant's scheduled day-ahead energy withdrawals and flat-profiles this value across each of the five minute intervals of the hour to obtain five minute interval day-ahead scheduled withdrawals. Day-ahead exports can be scheduled sub-hourly and are set equal to the MW value for each of the five minute intervals that the transaction is scheduled and adjusted for any curtailment in the day-ahead energy market. Balancing withdrawal charges are calculated at the applicable bus or aggregate at which a real-time deviation from its day-ahead scheduled withdrawal exists using the loss price at the applicable bus or aggregate.
- During a Real-time Market Suspension, Balancing Implicit Loss Charges will be calculated using Real-time loss prices calculated per Manual 11, Section 2.21. Real-time loss prices will be $0/MWh for Real-time Market Suspensions greater than 24 consecutive hours.

Each PJM Member's five minute interval balancing implicit loss charges (positive or negative) equals their balancing withdrawal charges minus their balancing injection credits for that five minute interval.

PJM Actions

- PJM retrieves the following information:
  - demand and decrement bids cleared day-ahead (MWh)
  - generation schedules and increment offers cleared day-ahead (MWh)
  - each PJM Member's percentage of joint owned units (% ownership)
  - day-ahead external and internal energy transactions (MWh)
  - sub-hourly day-ahead import and export schedule details
  - real-time external and internal energy five minute interval transactions (MW)
  - real-time load (MW) for the applicable load aggregate
  - five minute revenue meter generation MW values from PJM Power Meter if available
  - state estimator or telemetry generation MW scaled to match hourly revenue generation meter data from Power Meter as described in Section 1A of this PJM Manual

- hourly day-ahead and five minute real-time Loss Prices ($/MWh)

- PJM calculates the day-ahead withdrawal charges for each PJM Member for each of their day-ahead demand, decrement, and sale transactions as follows:

$$Day-ahead\ withdrawal\ Charge\ =$$

Day-ahead Demand MWh * Day-ahead Load Aggregate Loss Price

OR

Decrement Transaction MWh * Day-ahead Loss Price

OR

Day-ahead Sale Transaction MWh * Source Day-ahead Loss Price

- PJM calculates day-ahead injection credits for each PJM Member for each of their day-ahead generation, increment, and purchase transactions as follows:

$$Day-ahead\ Injection\ Credit\ =$$

Day-ahead Generation MWh * % Ownership * Day-ahead Gen Bus Loss Price

OR

Increment Transaction MWh * Day-ahead Loss Price

OR

Day-ahead Purchase Transaction MWh * sink Day-ahead Los s Price

- PJM calculates each PJM Member's hourly Day-ahead Implicit Transmission Loss Charge as the sum of their day-ahead withdrawal charges minus the sum of their day-ahead injection credits.
- PJM calculates the five minute balancing withdrawal charges for each PJM Member for the applicable bus or aggregate as follows:

$$Balancing\ Withdrawal\ Charge\ =$$

$$\left(\begin{array}{l} Real-Time\ loss\ de-rated\ Load\ MW\ +\ Real-Time\ Sale\ Transaction\ MW \\ -\ Day-ahead\ Demand\ MW\ -\ Decrement\ Transaction\ MW\ -\ Day-ahead\ Sale\ Transaction\ MW \end{array} \right)$$

$$* \ Real - Time\ Bus\ or\ Aggregate\ Loss\ Price \ / \ 12$$

- PJM calculates five minute balancing injection credits for each PJM Member for each bus or aggregate as follows:

$$Balancing\ Injection\ Credit =$$

$$\left(\begin{array}{c} Real - Time\ Generation\ MW * \%\ Ownership + Real - Time\ Purchase\ Transaction\ MW \\ - Day - ahead\ Generation\ MW * \%\ Ownership - Increment\ Transaction\ MW - Day - ahead\ Purchase\ Transaction\ MW \end{array} \right)$$

$$* \ Real - Time\ Bus\ or\ Aggregate\ Loss\ Price \ / \ 12$$

- PJM calculates each PJM Member's five minute Balancing Implicit Transmission Congestion Charge as the sum of their balancing withdrawal charges for the five minute interval minus the sum of their balancing injection credits for the five minute interval.

9.2.2 Explicit Transmission Loss Charges

Explicit Transmission Loss Charges are the loss charges for moving energy across the Transmission System. Explicit loss charges equal the difference between the source and sink Loss Prices of a transaction.

Internal Purchases — For internal purchases, the Explicit Loss Charges are calculated based on the differences in Loss Prices between their sink aggregates and source aggregates. The buyer pays the Explicit Loss Charges associated with an internal transaction.

External Transactions — For point-to-point and network secondary transmission customers, the Explicit Loss Charges are calculated based on the difference between the sink Loss Price and the source Loss Price. The Transmission Customer pays the explicit Loss Charges associated with an import, export, or wheel transaction.

Up-to congestion transactions - For up-to congestion transactions, the Explicit Loss Charges are calculated based on the difference between the sink Loss Price and the source Loss Price. The market participant pays the Explicit Loss Charges associated with an up-to congestion transaction.

If a Day-ahead Market Suspension occurs, the Day-ahead Loss Prices will be set to $0/MWh and Day-ahead energy transactions will be set to 0 MWh for all hours of the Operating Day.

During a Real-time Market Suspension, Balancing Explicit Transmission Loss Charges will be calculated using Real-time Loss Prices calculated per Manual 11, Section 2.21. Real-time Loss Prices will be $0/MWh for Real-time Market Suspensions greater than 24 consecutive hours.

PJM Actions

- PJM retrieves the following information:
  - transmission service reservations (MW, period, and source/sink)

  - day-ahead up-to congestion, external, and internal energy transactions (MWh)
  - sub-hourly day-ahead import and export schedule details
  - real-time external and internal energy five minute interval transactions (MW)
  - hourly day-ahead and five minute real-time Loss Prices ($/MWh)
- PJM calculates the hourly Day-ahead Explicit Loss Charge for each transaction as:

*Day-ahead Explicit Loss Charge = Day-ahead Transaction MWh * (Sink Day-ahead Loss Price – Source Day-ahead Loss Price)*

- PJM calculates the five minute Balancing Explicit Loss Charge for each transaction as:

*Five Minute Balancing Explicit Loss Charge = (Real-time Transaction MW – Day-ahead Transaction MW) * (Sink Real-time Loss Price – Source Real-time Loss Price) / 12*

9.3 Reconciliation for Transmission Loss Charges

PJM will calculate reconciled Transmission Loss charges for EDCs and Retail Load Aggregators (a.k.a. Electric Generation Suppliers) for past monthly billings on a two month lag. The reconciliation kWh data must be supplied to PJM by the EDCs no later than the last day of the billing month that is two months after the original billing month. For example all reconciliation data for January must be submitted by March 31 at 23:59. The reconciliation kWh data represents the difference between the scheduled Retail Load Responsibility or Wholesale Load Responsibility InSchedule (in MWh) and the “actual” usage based on metered data. This hourly kWh data must be reported separately for each applicable InSchedule contract.

As part of the reconciliation process, residual metered load aggregate distribution factors are updated based on reconciliation kWh data for load responsibility InSchedules priced at nodal aggregates. An adjusted distribution loss rate for residual metered load aggregates is then calculated as the difference between the Real-time Loss Price that is calculated using the updated distribution factors and the original Real-time Loss Price. This adjusted distribution loss rate is only calculated for residual metered load aggregates.

PJM calculates the Transmission Loss charge reconciliations by multiplying the kWh data (de-rated for transmission losses) by the Real-time Loss Price plus the adjusted distribution loss rate at the aggregate sink bus associated with the InSchedule contract for that hour.

For those InSchedule contracts where the aggregate sink bus is a residual metered load aggregate, PJM calculates additional Transmission Loss charge reconciliations by multiplying the scheduled Retail Load Responsibility InSchedule (in MWh) by the adjusted distribution loss rate. These charge reconciliations are then totaled for the month for each EDC or Retail Load Aggregator. Note that the reconciliation for Transmission Loss charges for a month may be either a positive or a negative value, and may even be such that the reconciled load responsibility MWh results in a negative load quantity.

9.4 Transmission Loss Credits

The total amount of both day-ahead and balancing hourly transmission losses charges, adjusted for the value of day-ahead and balancing spot market losses and loss revenues due to inadvertent interchange is allocated among the PJM market participants in proportion to their real-time load (de-rated for transmission losses) plus their real-time PJM exports (that pay for transmission service) as a percentage of the total PJM load (excluding losses) and exports. Only a percentage of the non-firm export MWh are used in this allocation. The percentage is calculated as the ratio of the non-firm transmission rate to the firm rate.

PJM Actions

- PJM accounting process retrieves the following information:
  - hourly real-time load (excluding losses) for each LSE (MWh)
  - hourly real-time PJM export schedules for each Market Participant (MWh)
  - hourly non-firm export reduction factor based on the non-firm point-to-point transmission service rate divided by the firm point-to-point transmission service rate
  - transmission service reservations (MW, period, type, and source/sink)
  - each Market Participant's day-ahead and balancing loss charges ($)
  - spot market loss value ($)
  - inadvertent interchange loss value ($)
- PJM accounting process calculates the total hourly transmission loss charges by summing the day-ahead and balancing loss charges for each Market Participant plus the spot market value of losses, including an adjustment for the inadvertent interchange loss value.
- PJM accounting process calculates the hourly real-time load (excluding losses) plus export ratio of each Market Participant.
- PJM includes only export transaction MWh that pay for transmission service. PJM compares the export transaction MWh to the linked transmission reservation capacity MW for the hour (recognizing ramping and time zone shifts) to ensure that the export transaction MWh do not exceed the linked transmission service capacity MW. Non-firm export transaction MWh are multiplied by an hourly non-firm export reduction factor prior to including them in the allocation, since the non-firm transmission service rate is a percentage of the firm transmission service rate.
- PJM accounting process allocates the total hourly loss charges as hourly transmission loss credits for each Market Participant based on their hourly real-time load (excluding losses) plus export (100% of firm export MWh and the non-firm export reduction factor times non-firm export MWh) ratio share.

9.5 Reconciliation for Transmission Loss Credits

PJM will calculate reconciled Transmission Loss credits for EDCs and Retail Load Aggregators (a.k.a. Electric Generation Suppliers) for past monthly billings on a two month lag that were based on load ratio shares. The reconciliation kWh data must be supplied to PJM by the EDCs no later than the last day of the billing month that is two months after the original billing month. For example, all reconciliation data for January must be submitted by March 31 at 23:59. The reconciliation kWh data represents the difference between the scheduled Retail Load Responsibility or Wholesale Load Responsibility InSchedule (in MWh) and the “actual” usage based on metered data. This hourly kWh data must be reported separately for each applicable InSchedule contract.

PJM calculates the Transmission Loss credit reconciliations by multiplying the kWh data (de-rated for transmission losses) by the Transmission Loss Credit billing determinant for that hour. The hourly Transmission Loss Credit billing determinants (in $/MWh) are calculated by dividing the total day-ahead and balancing transmission loss revenues for an hour by the total PJM real-time load (de-rated for transmission losses) and exports (that pay for transmission service and using only the hourly non-firm export reduction factor share of non-firm export MWh) in that hour. These credit reconciliations are then totaled for the month for each EDC or Retail Load Aggregator. Note that the reconciliation for Transmission Loss credits for a month may be either a positive or a negative value, and may even be such that the reconciled load responsibility MWh results in a negative load quantity.

Section 10: Emergency Energy Accounting

Welcome to the Emergency Energy Accounting section of the ***PJM Manual for Operating Agreement Accounting***. In this section, you will find the following information:

- A description of the types of Emergency energy transactions and how they are accounted for (see “Emergency Energy Accounting Overview”).
- How Emergency energy purchases from other Control Areas are accounted for (see “Emergency Energy Purchases by PJM”).
- How Emergency energy sales to other Control Areas are accounted for (see “Emergency Energy Sales by PJM”).
- How Minimum Generation Emergency purchases from other Control Areas are accounted for (see “Minimum Generation Emergency Purchases by PJM”).
- How Minimum Generation Emergency sales to other Control Areas are accounted for (see “Minimum Generation Emergency Sales by PJM”).

10.1 Emergency Energy Accounting Overview

PJM may purchase energy from outside PJM as needed to alleviate or end an Emergency, and may sell energy to another Control Area as requested during Emergency conditions in that Control Area. Emergencies may be reserve deficiencies or Minimum Generation (low load) Emergencies.

Emergency energy sales to other Control Areas are priced at 150% of the real-time LMP at the bus or busses at the border of PJM at which the energy is delivered.

Minimum Generation Emergency energy sales to other Control Areas are priced at a mutually agreed upon price not to exceed the real-time LMP at the bus or busses at the border of PJM at which the energy is delivered.

10.2 Emergency Energy Purchases by PJM

The net cost in excess of real-time LMPs of Emergency energy purchased is allocated to PJM Market Participants in proportion to their five minute interval real-time deviation from their net withdrawals and injections in the day-ahead market, whenever that deviation increases their net spot market purchases or decreases their net spot market sales.

If generator reductions are requested by PJM for reliability during five minute intervals of Emergency energy purchases, the reduced MW are used to reduce that PJM Market Participants’ charge allocation.

PJM Actions

- PJM retrieves the following information:
  - PJM Emergency energy purchase transactions (MW, $)
  - each PJM Market Participant's real-time net five minute interval net withdrawals and injections (MW)
  - each PJM Market Participant's day-ahead net hourly withdrawals and injections (MWh)
  - five minute real-time bus LMPs ($/MWh)
  - PJM's designated interface points with adjacent Control Areas
- PJM calculates the total charges to be allocated among PJM Market Participants for each five minute interval for each Emergency energy purchase as:

$$\textit{Emergency Energy Purchase}\ (\textit{MW}) * (\textit{Emergency Energy Purchase Price} - \textit{Real-Time Interface LMP}) / 12$$

- PJM allocates the total five minute interval charge for Emergency energy purchases to PJM Market Participants in proportion to their real-time deviation including the impact of load reconciliation MWh from their net withdrawals and injections in the day-ahead market, whenever that deviation increases their net spot market purchases or decreases their net spot market sales.

A billing adjustment is calculated, as applicable, to exempt any MW of generator reductions requested by PJM for reliability during any five minute interval of Emergency energy purchases.

10.3 Emergency Energy Sales by PJM

The net revenues in excess of real-time LMPs of Emergency energy sales is credited to PJM Market Participants in proportion to their five minute interval real-time deviation from their net withdrawals and injections in the day-ahead market, whenever that deviation increases their net spot market purchases or decreases their net spot market sales, plus any energy sales from within PJM to entities outside of PJM that have been curtailed by PJM during the Emergency.

PJM Actions

- PJM retrieves the following information:
  - PJM Emergency energy sales ($, MW)
  - each PJM Market Participant's real-time net five minute interval withdrawals and injections (MW)
  - each PJM Market Participant's day-ahead net hourly withdrawals and injections (MWh)
  - five minute real-time bus LMPs ($/MWh)
  - PJM interface points with adjacent Control Areas

  - External sales that are curtailed by PJM during Emergency energy sales
- PJM calculates the total credits to be allocated among PJM Market Participants for each five minute interval for each Emergency energy sale as:

*Emergency Energy Sale (MW) * (Emergency Energy Sale Price – Real-Time Interface LMP) / 12*

- PJM allocates the total five minute interval credit for Emergency energy sales among PJM Market Participants in proportion to their real-time deviation including the impact of load reconciliation MWh from their net withdrawals and injections in the day-ahead market, whenever that deviation increases their net spot market purchases or decreases their net spot market sales, plus any energy sales from within PJM to entities outside of PJM that have been curtailed by PJM during the Emergency.

10.4 Minimum Generation Emergency Purchases by PJM

The net cost of Minimum Generation Emergency energy purchased is allocated to PJM Market Participants in proportion to their five minute interval real-time deviation from their net withdrawals and injections in the day-ahead market, whenever that deviation decreases their net spot market purchases or increases their net spot market sales.

PJM Actions

- PJM retrieves the following information:
  - PJM Emergency energy minimum purchases (MW, $)
  - each PJM Market Participant's real-time net five minute interval withdrawals and injections (MW)
  - each PJM Market Participant's day-ahead net hourly withdrawals and injections (MWh)
  - five minute real-time LMPs ($/MWh)
  - PJM interface points with adjacent control areas
- PJM calculates the total charges to be allocated among PJM Market Participants for each five minute interval for each Minimum Generation Emergency energy purchase as:

*Minimum Generation Emergency Energy Purchase (MW) * (Emergency Energy Purchase Price – Real-Time Interface LMP) / 12*

PJM allocates the total five minute interval charge for Minimum Generation Emergency purchases to PJM Market Participants in proportion to their real-time deviation including the impact of load reconciliation MWh from the net withdrawals and injections in the day-ahead market, whenever that deviation decreases their net spot market purchases or increases their net spot market sales.

10.5 Minimum Generation Emergency Sales by PJM

The net revenues in connection with Minimum Generation Emergency energy sales to other Control Areas are credited to PJM Market Participants in proportion to their five minute interval real-time deviation from their net withdrawals and injections in the day-ahead market, whenever that deviation decreases their net spot market purchases or increases their net spot market sales.

PJM Actions

- PJM retrieves the following information:
  - PJM Emergency energy minimum sales (MW, $)
  - each PJM Market Participant's real-time net five minute interval withdrawals and injections (MW)
  - each PJM Market Participant's day-ahead net hourly withdrawals and injections (MWh)
  - five minute real-time bus LMPs ($/MWh)
  - PJM interface points with adjacent Control Areas
- PJM calculates the total credits to be allocated among PJM Market Participants for each five minute interval for each Minimum Generation Emergency energy sale as:

*Minimum Generation Emergency Energy Sale (MW) * (Emergency Energy Sale Price – Real-Time Interface LMP) / 12*

- PJM allocates the total five minute interval credit for Minimum Generation Emergency energy sales among PJM Market Participants in proportion to their real-time deviation including the impact of load reconciliation MWh from their net withdrawals and injections in the day-ahead market, whenever that deviation decreases their net spot market purchases or increases their net spot market sales.

Section 11: PJM Load Response Programs Accounting

Welcome to the PJM Load Response Programs Accounting section of the ***PJM Manual for Operating Agreement Accounting***. In this section, you will find the following information:

- An overview of PJM Load Response Programs (see "PJM Load Response Programs Overview").
- A description of the accounting procedure for the PJM Load Response Programs (see "PJM Load Response Programs Accounting Procedures").

11.1 PJM Load Response Programs Overview

The PJM Load Response Programs are designed to provide compensation to end-use customers or curtailment service providers ("CSP") for reduction of consumption when scheduled or dispatched by PJM and when satisfying the Net Benefits Test or when an emergency or pre-emergency event occurs or a Load Management test or retest occurs. PJM offers four different types of Load Response Programs, the Full Emergency, the Full Pre-Emergency, the Emergency Energy Only, and the Economic Load Response Programs.

The Full Emergency and Full Pre-Emergency Load Response Program is designed to provide a method by which end-use customers may be compensated by reducing load during a Load Management event.

The Emergency Energy Only Program is designed to provide a method by which end-use customers may be compensated by PJM for voluntarily reducing load during an Emergency Energy Only event.

The Economic Load Response Program is designed to provide compensation to end-use customers or curtailment service providers ("CSP") for reduction of consumption when scheduled or dispatched by PJM and when satisfying the Net Benefits Test.

11.2 PJM Load Response Programs Accounting Procedures

11.2.1 Full Emergency and Emergency Energy Only Load Response Program

Under the Full Emergency, Full Pre-Emergency, and Emergency Energy Only Load Response Programs, emergency and pre-emergency energy payment for reducing load is based on the actual kWh relief provided plus an adjustment for losses. Compensation is equal to the measured reduction adjusted for losses times the appropriate zonal or aggregate five-minute Locational Marginal Price (LMP). If, however, the sum of the five-minute interval energy payments in an Operating Day to a participant dispatched by PJM is not greater than or equal to the value of the standing emergency or pre-emergency energy offer price for actual, achieved reductions, then the CSP will be made whole up to the value of the standing offer for the actual,

achieved reductions, as described in PJM Manual 11: Energy & Ancillary Services Market Operations, Section 10. If a Real-time Market Suspension occurs, the Real-time LMPs will be calculated per the business rules in Manual 11, Section 2.21.

DR Full Emergency, Full Pre-Emergency, and Capacity only Load Response participants are subject to the Load Management Test Failure Charge and the Demand Resource Compliance Penalty Settlements as described in PJM Manual 18: PJM Capacity Market, Section 9.

During Emergency conditions, costs for Emergency purchases in excess of LMP are allocated to PJM Market Participants in proportion to their increase in net purchases minus real-time dispatch reduction megawatts from the PJM energy market during the hour in the real-time market compared to the day-ahead market. Consistent with this pricing methodology, all energy charges under the Full Emergency, Full Pre-Emergency, and Emergency Energy Only Load Response Program are allocated to PJM Market Participants in proportion to their real-time deviation, including the impact of load reconciliation MWh, from their net withdrawals and injections in the day-ahead market, whenever that deviation increases their spot market net purchases or decreases their spot market net sales less any real-time dispatch reduction MWs.

PJM Actions

- PJM retrieves the following information:
  - each PJM Market Participant's load reduction meter data
  - each registration's dispatch intervals within each hour
  - EDC loss de-ration factors
  - Energy Loss factor
  - each PJM Market Participant's real-time net withdrawals and injections (MW)
  - each PJM Market Participant's day-ahead net withdrawals and injections (MWh)
  - real-time five minute LMPs ($/MWh)
  - hourly real-time dispatch reduction MWh

<u>For Market Participants that submit hourly load reduction values:</u>

- Actual MWh relief provided is equal to the CBL less the RT metered load. Additional details on the calculation of CBL and RT metered load can be found in PJM Manual 11: Energy & Ancillary Services Market Operations, Section 10. For Full Emergency and Emergency Energy Only Load Response reductions, the Cleared Day-ahead MWh Load is equal to 0.

$$Net\ Energy\ MWh = (Actual\ MWh\ relief\ provided * (1 - EDC\ loss\ de\ ration\ factor) * Energy\ Loss\ factor - Cleared\ Day - ahead\ MWh\ Load$$

- PJM evenly distributes the Net Energy MWh over all of the five-minute intervals in the hour that the registration was dispatched.

Real − time Load Response Distributed MW

= Net Energy MWh * (12 ÷

number of five minute intervals in the hour that the registration was dispatched)

where the Real-time Load Response Distributed MW for any five minute interval is capped at the CBL

<u>For Market Participants that submit five-minute load reduction values:</u>

- A net load reduction value is calculated for each Real-Time Settlement Interval as:

$$Net\ Load\ Reduction\ MW = (Actual\ MW\ relief\ provided * (1 - EDC\ loss\ de\ ration\ factor) * Energy\ Loss\ factor) - Cleared\ Day - ahead\ MW\ Load$$

where the Cleared Day-ahead MW Load value is the hourly Cleared Day-ahead MWh Load value flat-profiled across each of the five minute intervals that the resource is dispatched and the Net Load Reduction MW for any five minute interval is capped at the CBL

- PJM calculates the total credits for each five minute interval for each PJM Market Participant in the Emergency or Pre-Emergency Load Response Program as:

(*Real − time Load Response Distributed MW or Net Load Reduction MW*)

*(*Appropriate five minute real − time zonal or aggregate LMP*) ÷ 12

PJM allocates the total hourly charge for the Emergency and Pre-Emergency Load Response Program to PJM Market Participants in proportion to their real-time deviation from their net withdrawals and injections in the day-ahead market, whenever that deviation increases their net spot market purchases or decreases their net spot market sales less any real-time dispatch reduction MWs to account for generators whose output is manually or economically reduced or suspended in real-time at a MW level less than their day-ahead commitment.

11.2.1A Load Management Test Energy Payment to Load Management Full Registrations for Reducing Load

The load management tests and retests are eligible for an energy settlement. The CSP may request an energy settlement if they have verified the location(s) took actions to reduce load and submit all required meter data within sixty (60) days of the test/retest day. Compensation is equal to the measured reduction adjusted for losses times the appropriate five-minute Location Marginal Price (LMP). Section 10.4 of PJM Manual 11: Energy & Ancillary Services Market Operations outlines how energy reductions will be determined. If the settlement is submitted, both hours of the test/retest must be settled. Settlements submitted where the location did not

take action to reduce load may be referred to the IMM or FERC Officer of Enforcement for investigation.

The cost of payments for Emergency Load Response and Pre-Emergency Load Response energy settlements for tests, shall be recovered from Market Participants on a ratio-share basis based on their real-time exports from the PJM Region and from Load Serving Entities on ratio-share basis based on their real-time loads in each Zone for that month where the tests were conducted, with the ratio shares determined as follows:

$$\left\{\frac{(Participant's\ \ Real-time\ \ Load(s)\ \ in\ \ Applicable\ \ Zone(s)\ \ +\ \ Participant's\ \ Real-time\ \ Exports)}{(Total\ \ Applicable\ \ Zone(s)\ \ Real-time\ \ Load(s)\ \ +\ \ Total\ \ PJM\ \ Real-time\ \ Exports)}\right\}$$

11.2.2 Economic Load Response Program

Under the Economic Load Response Program, Market Participants have the option to participate in both the Day-ahead and Real-time Energy Markets. Participation in the Real-time Energy Market consists of submitting a day-ahead offer that cleared or being dispatched by PJM.

Day-ahead Settlements

PJM will accept demand reduction bids from an end-use customer or its representative CSP for a specific MW curtailment (in minimum increments of .1 MW or 100 kW). The demand reduction bid will include the day-ahead LMP above which the end-use customer would not consume, and could also include shut-down costs and/or minimum down time (i.e. the number of contiguous hours for which the load reduction must be committed).

Credits for reducing load are based on the reductions of MWh committed in the day-ahead market.

- An end-use customer or representative CSP that submits a load reduction bid day-ahead that is cleared by PJM when the applicable zonal or aggregate day-ahead LMP is less than the price determined under the Net Benefits Test for that month, will not be compensated by PJM for the reduction.
- An end-use customer or representative CSP that submits a load reduction bid day-ahead that is cleared by PJM when the applicable zonal or aggregate day-ahead LMP is greater than or equal to the price determined under the Net Benefits Test for that month, will be paid by PJM the day-ahead LMP.

The cost of payments to Economic Load Response Participants are recovered from Market Participants as follows:

- Payment is no longer made to any submitted load reduction day-ahead bid that is cleared by PJM when the day-ahead LMP is less than the price determined under the Net Benefits Test for that month,
- For any submitted load reduction day-ahead bid that is accepted by PJM when the day-ahead LMP is greater than or equal to the price determined under the Net Benefits Test for

that month, PJM shall recover the costs from Market Participants on a ratio-share basis based on their real-time exports from the PJM Region and real-time loads in each Zone for which the load-weighted average real-time LMP for the hour during which the reduction occurred is greater than the price determined under the Net Benefits Test for that month.

Total payments to end-use customers or their representative CSP for accepted day-ahead Economic Load Response bids that follow PJM dispatch instructions will not be less than the total value of the load response bid, including any submitted shut-down costs. Details can be found in the Day-ahead Operating Reserve Load Response Settlements Section.

End-use customers or their representative CSP that have load reductions committed in the day-ahead market that deviate from the day-ahead schedule in real-time shall be charged or credited for such variance at the real-time LMP per the Real-time Settlements section below, plus any associated balancing operating reserve charges per the Balancing Operating Reserves Load Response Settlements Section.

PJM Actions

- PJM retrieves the following information:
  - each PJM Market Participant's cleared day-ahead scheduled load reduction quantities
  - each PJM Market Participant's actual metered reduction
  - EDC loss de-ration factors
  - Energy Loss factor
  - associated shut-down costs
  - hourly integrated day-ahead LMPs ($/MWh)
  - monthly Net Benefits Test price
  - hourly real-time load (excluding losses) for each LSE (MWh)
  - hourly real-time PJM export schedules for each Market Participant (MWh)
- Payment will be made by PJM to the end-use customer or representative CSP as:

$$\textit{Cleared Day} - \textit{ahead MWh load reduction}^*$$

$$\textit{Day} - \textit{ahead LMP when the applicable zonal or aggregate day} - \textit{ahead LMP}$$

$$> = \textit{Monthly Net Benefits Test}$$

- PJM shall recover payments for day-ahead cleared load reductions when the day-ahead LMP is greater than or equal to the price determined under the Net Benefits Test for that month as:

$$\textit{Total Day} - \textit{ahead Load Response Credits}^*$$

$$\{(\textit{Participant's Real} - \textit{time Load in Applicable Zones}(s) + \textit{Participant's Real} - \textit{time Exports})$$

$$\div (\textit{Total Applicable Zone}(s)\ \textit{Real} - \textit{time Load} + \textit{Total PJM Real} - \textit{time Exports})\}$$

where the applicable zones are those zones for which the load-weighted average real-time LMP for the hour during which the reduction occurred is greater than or equal to the Monthly Net Benefits Test Price

Real-time Settlements

Credits for reducing load are based on the actual MWh relief provided in excess of committed day-ahead load reductions plus an adjustment for losses.

- An Economic Load Response Participant that curtails or causes the curtailment of demand in real-time in response to PJM dispatch, and for which the applicable real-time five minute LMP is less than the threshold price established under the Net Benefits Test, will not be compensated by PJM for the reduction.
- An Economic Load Response Participant that curtails or causes the curtailment of demand in real-time in response to PJM dispatch, and for which the applicable real-time five minute LMP is equal to or greater than the threshold price established under the Net Benefits Test, will be compensated by PJM Settlement at the real-time five minute LMP.
- If a Real-time Market Suspension occurs, the Real-time LMP will be calculated per the business rules in Manual 11, Section 2.21.

In cases where load response is dispatched by PJM and follows dispatch within a 20% threshold, the total payment to end-use customers or their representative CSP will not be less than the total value of the load response bid, including any submitted shut-down costs. Details can be found in the Balancing Operating Reserve Load Response Settlements Section.

The cost of payments to Economic Load Response Participants for load reductions are recovered from Market Participants as follows:

- Payment is no longer made to any load reductions in real-time when the real-time five minute LMP is less that the price determined under the Net Benefits Test.
- For any real-time load reductions in real-time in response to PJM dispatch, and for which the applicable real-time five minute LMP is greater than or equal to the price determined under the Net Benefits Test for that month, PJM shall recover the costs from Market Participants on a ratio-share basis based on their real-time exports from the PJM Region and real-time loads in each Zone for which the load-weighted average real-time LMP for the hour during which the reduction occurred is greater than or equal to the price determined under the Net Benefits Test for that month.

PJM Actions

- PJM retrieves the following information:
  - each PJM Market Participant’s day-ahead scheduled load reduction quantities
  - each PJM Market Participant’s actual metered reduction de-rated for transmission losses
  - each registration’s or dispatch group’s dispatch intervals within each hour

- associated shut-down costs
- EDC loss de-ration factors
- Energy Loss factor
- five minute real-time LMPs ($/MWh)
- monthly Net Benefits Test price
- hourly real-time load (excluding losses) for each LSE (MWh)
- hourly real-time PJM export schedules for each market participant (MWh)
- hourly load-weighted average real-time LMP for each zone ($/MWh)

<u>For Market Participants that submit hourly load reduction values:</u>

- Actual MWh relief provided is equal to the CBL less the RT metered load. Additional details on the calculation of CBL and RT metered load can be found in PJM Manual 11: Energy & Ancillary Services Market Operations, Section 10.

$$\textit{Net Energy MWh} =$$

$$(\textit{Actual MWh relief provided}*(1 - \textit{EDC loss de ration factor})*\textit{Energy Loss factor}) -$$

$$\textit{Cleared Day} - \textit{ahead MWh Load}$$

- PJM evenly distributes the Net Energy MWh over all of the five-minute intervals in the hour that the registration was dispatched.

$$\textit{Real} - \textit{time Load Response Distributed MW} =$$

$$\textit{Net Energy MWh}*(12$$

$$\div \textit{number of five minute intervals in the hour that the registration was dispatched})$$

where the Real-time Load Response Distributed MW for any five minute interval is capped at the CBL

<u>For Market Participants that submit five-minute load reduction values:</u>

- A net load reduction value is calculated for each Real-Time Settlement Interval as:

$$\begin{gathered} Net\ Load\ Reduction\ MW = \\ (Actual\ MW\ relief\ provided * (1 - EDC\ loss\ de\ ration\ factor) * Energy\ Loss\ factor) \\ - Cleared\ Day - ahead\ MW\ Load \end{gathered}$$

where the Cleared Day-ahead MW Load value is the hourly Cleared Day-ahead MWh Load value flat-profiled across each of the five minute intervals that the resource is dispatched and the Net Load Reduction MW for any five minute interval is capped at the CBL

- PJM calculates the total credits for each five minute interval for each PJM Market Participant in the Economic Load Response Program as:

$$(Real - time\ Load\ Response\ Distributed\ MW\ or\ Net\ Load\ Reduction\ MW)*$$
$$(Appropriate\ five\ minute\ real - time\ zonal\ or$$
$$aggregate\ LMP\ when\ the\ applicable\ zonal\ or\ aggregate\ five\ minute\ Real - time\ LMP$$
$$> = Monthly\ Net\ Benefits\ Test\ Price) \div 12$$

- PJM shall recover payments for real-time load reductions when the real-time five minute LMP is greater than or equal to the price determined under the Net Benefits Test for that month as:

$$Total\ Real - time\ Load\ Response\ Credits$$
$$*\{(Participant's\ \ Real - time\ Load\ in\ Applicable\ Zone(s) + Participant's\ \ Real - time\ Exports) \div$$
$$(Total\ Applicable\ Zone(s)\ Real - time\ Load + Total\ PJM\ Real - time\ Exports)\}$$

where the applicable zones are those zones for which the load-weighted average real-time LMP for the hour during which the reduction occurred is greater than or equal to the Monthly Net Benefits Test Price

Day-ahead Operating Reserve Load Response Settlements

Total payments to Economic Load Response Participants for cleared day-ahead demand reduction bids with an offer price equal to or greater than the threshold price established under the Net Benefits Test that follow the dispatch instructions of the Office of the Interconnection will not be less than the total value of the demand reduction bid.

Day-ahead cleared load reduction resources are considered to be following dispatch instructions if the actual load reduction quantity for a given hour deviates by no more than 20% above or below the Desired MW quantity. Hours for which the actual reduction quantity is outside the 20% bandwidth will not be eligible for the make-whole payment. If at least one hour is not eligible for make-whole payments based on the 20% criteria, then the resource will also not be made whole for its shutdown cost.

- Total payments to Economic Load Response Participants for accepted day-ahead demand reduction bids with an offer price equal to or greater than the threshold price established under the Net Benefits Test that follow the dispatch instructions of the Office of the Interconnection will not be less than the total value of the demand reduction bid:

$$Sum[(Offer\ Price*Day - ahead\ committed\ MWs) + Shutdown\ Cost - Day - ahead\ Economic\ Load\ Response\ Credits)$$
$$across\ all\ hours\ of\ the\ day$$

- The daily total cost of Day-ahead Operating Reserve which includes Day-ahead Load Response Operating Reserve payments are allocated and charged to PJM Members in proportion to their cleared day-ahead demand, up-to congestion transactions, and decrement bids plus their cleared day-ahead exports.

Balancing Operating Reserve Load Response Settlements

In cases where the demand reduction follows dispatch as instructed by the Office of the Interconnection, and the demand reduction offer price is equal to or greater than the threshold price established under the Net Benefits Test, payment will not be less than the total value of the demand reduction bid, including any submitted shut-down costs.

Real-time load reduction resources are considered to be following dispatch instructions if the actual load reduction quantity for a given hour deviates by no more than 20% above or below the Desired MWh quantity. Hours for which the actual reduction quantity is outside the 20% bandwidth will not be eligible for the make-whole payment. If at least one hour is not eligible for make-whole payments based on the 20% criteria, then the resource will also not be made whole for its shutdown cost.

Balancing Operating Reserve credits are calculated by operating segment within an Operating Day. A load response resource considered to be following dispatch instructions will be made whole for the duration of the greater of the day-ahead schedule or minimum down time and made whole separately for the block of five minute intervals it is operated at PJM's direction in excess of the greater of the day-ahead schedule or minimum down time. Shutdown costs, as applicable, will be included in the segment represented by the longer of the day-ahead schedule or minimum down time.

- Total payments to Economic Load Response Participants for real-time demand reductions with an offer price equal to or greater than the threshold price established under the Net Benefits Test that follow the dispatch instructions of the Office of the Interconnection will not be less than the total value of the demand reduction bid and are calculated for each operating segment.
- The daily total cost of Balancing Load Response Operating Reserve Payments is allocated and charged to PJM Members in proportion to their real-time deviations from day-ahead schedules and generator deviations.

Dispatchable economic load reduction resources that follow dispatch shall not be assessed balancing Operating Reserve deviations. Economic load reduction resources that do not follow dispatch shall be assessed Balancing Operating Reserve deviations. In the case where the Market Participant deviates by more than twenty percent of the day-ahead committed bid or the desired amount, the Market Participant will incur Balancing Operating Reserve charges:

$$Abs\left[(Actual\ MWh\ relief\ provided*(1 - EDC\ loss\ de - ration\ factor)*Energy\ Loss\ factor - Desired\ MWh\right]*$$

$$RTO\ Balancing\ Operating\ Reserves\ Deviation\ Rate + Abs[(Actual\ MWh\ relief\ provided$$

$$*(1 - EDC\ loss\ de - ration\ factor)*Energy\ Loss\ factor) - Desired\ MWh]$$

$$*Locational\ Balancing\ Operating\ Reserves\ Deviation\ Rate(East\ or\ West\ depending\ on\ zone)$$

- Actual MWh relief provided is equal to the CBL less the RT metered load. Additional details on the calculation of CBL and RT metered load can be found in PJM Manual 11: Energy & Ancillary Services Market Operations, Section 10.

The total Balancing Operating Reserve charges assessed for economic load response resource deviations are allocated as follows:

- For resources that have a Day-Ahead Commitment: deviation charges are allocated back as credits to the corresponding LSE on the deviating registration otherwise would have had load that was reduced.
- For resources that do not have a Day-Ahead Commitment: deviation charges are allocated back as credits to participants assessed Balancing operating Reserves for Deviation Charges pro-rata based on their total RTO deviations, as calculated in 5.3.2.2. Economic load response deviations are excluded from the allocation of credits.

Section 12: Metering Reconciliation Accounting

Welcome to the Metering Reconciliation Accounting section of the PJM Manual for ***Operating Agreement Accounting***. In this section, you will find the following information:

- How metering errors and corrections are reconciled and corrected (see “Meter Correction Billing”).

12.1 Meter Error Correction Billing

Metering errors and corrections are reconciled at the end of each month by a meter correction charge. The monthly meter error correction charge (plus/minus) is determined by the product of the positive or negative deviation in energy amounts times the load weighted average real-time LMP for all load buses in the PJM Region, as applicable for tie meter corrections, or times the generation weighted average real-time LMP for individual generation buses, energy injections into the transmission system modeled as generators and Pseudo Tie imports into PJM for generator meter corrections; or times the Dynamic Schedule weighted average interface real-time LMP for meter corrections for Dynamic Schedule imports into PJM and non-unit specific Dynamic Schedule exports out of PJM; or times the difference between the RT MW weighted average interface real-time LMP and RT MW weighted average generator bus real-time LMP for Pseudo Tie exports and unit specific Dynamic Schedule exports out of PJM meter corrections.

Meter error data is submitted to PJM via Power Meter no later than the last PJM business day of the month following the end of the monthly billing cycle applicable to the meter correction.

A PJM Member may not assert a claim for an adjustment in billing as a result of a meter error for any error discovered more than two years after the date on which the metering occurred. Any claim for an adjustment in billing as a result of a meter is limited to bills for transactions occurring in the most recent annual accounting period of the billing PJM Member in which the meter error occurred and the prior annual accounting period. Billing cycle accounting for PJM Mid-Atlantic 500 kV transmission losses is adjusted to account for errors in meters on those 500 kV Transmission Facilities.

12.1.1 Meter Corrections between PJM Members

If a PJM Member or PJM discovers a meter error affecting an interchange of energy with another PJM Member(s) and makes the error known to the other PJM Member(s) prior to the completion by PJM of the accounting for the interchange, and if the PJM Members are willing to adjust hourly tie readings to compensate for the error, an adjustment in tie readings may be made by the PJM Members in order to correct for the meter error, provided corrected information is provided to PJM in accordance with PJM’s accounting deadlines. No such adjustment may be made if PJM has completed the accounting for the Operating Day in which

the interchange occurred. If this is not practical, the error is accounted for by a correction at the end of the billing cycle.

12.1.2 Meter Corrections between Control Areas

An error in metered interchange between a PJM Member and an entity in another Control Area is corrected by adjusting the hourly meter readings. If this is not practical, the error is accounted for by a correction at the end of the billing cycle. The PJM Member with ties or Dynamic Transfers with such other Control Area experiencing the error accounts for the full amount of the discrepancy and an appropriate debit or credit is applied proportionately among all LSEs based on load (de-rated for transmission losses). PJM adjusts the actual or scheduled interchange between PJM and the other Control Area to maintain a proper record of inadvertent energy flow.

PJM Actions

- PJM receives meter correction data from the fully metered PJM Members.
- PJM verifies and reconciles the meter correction data to ensure data consistency.
- PJM allocates PJM Mid-Atlantic 500 kV meter corrections to all fully metered PJM Mid-Atlantic EDCs in proportion to their monthly PJM Mid-Atlantic real-time load (excluding losses), and allocates external tie line meter corrections to all PJM RTO LSEs in proportion to their monthly PJM RTO real-time load (excluding losses and excluding purchases of Direct Charging Energy).
- PJM calculates monthly: load weighted-average real-time LMP for the PJM RTO, pnode specific generation weighted-average real-time LMPs, and Dynamic Schedule weighted-average interface real-time LMPs.
- PJM calculates meter error correction charges or credits for each EDC, LSE, or generator or Dynamic Transfer as follows:

*Meter Correction Charge (+/-) = (Tie Meter Correction MWh * PJM Monthly Load Weighted-Average LMP) + (Generation Meter Correction MWh * Applicable Monthly Generation Weighted-Average LMP) + (Dynamic Schedule Import Correction MWh * Applicable Monthly Dynamic Schedule Weighted-Average Interface LMP) + (Dynamic Schedule Non-Unit specific Export Correction MWh * Applicable Monthly Dynamic Schedule Weighted-Average Interface LMP) + (Unit Specific Dynamic Transfer Correction MWh * (Applicable Monthly Dynamic Transfer Weighted-Average Interface LMP - Applicable Monthly Generation Weighted-Average LMP))*

- The following table shows the Market Participants that receive +/- meter correction charges based on the various types of meters that require corrections.

Type of Tie Meter Correction	Mid-Atlantic 500kv?	Impacted Participant(s)	Impacted Participant(s)
PJM Internal Tie	Yes	Applicable EDC	PJM Mid-Atlantic EDCs

Type of Tie Meter Correction	Mid-Atlantic 500kv?	Impacted Participant(s)	Impacted Participant(s)
	No	Applicable EDC	Applicable EDC
PJM External Tie	Yes	PJM Mid-Atlantic EDCs	All PJM LSEs
	No	Applicable EDC	All PJM LSEs
Generator Tie	Yes	Generator	PJM Mid-Atlantic EDCs
	No	Generator	Applicable EDC
Pseudo Tie Generator Import	No	PJM Market Participant receiving credit	All PJM LSEs as inadvertent allocation
Pseudo Tie Generator or Dynamic Schedule Generator Export	Yes and No	Exporting Party	All PJM LSEs as inadvertent allocation
Dynamic Schedule Import	No	PJM Market Participant receiving credit	All PJM LSEs as inadvertent allocation
Dynamic Schedule Export (not unit specific)	No	PJM Market Participant receiving charge	All PJM LSEs as inadvertent allocation

- For each EDC that requests PJM to further allocate their meter correction charges to all LSEs in their territory (and provides PJM with documented concurrence from all of their LSEs), that EDC's meter correction charges will be allocated to all LSEs in their territory in proportion to their monthly real-time load (excluding losses and excluding purchases of Direct Charging Energy).

Section 13: Station Power Accounting

Welcome to the Station Power Accounting section of the ***PJM Manual for Operating Agreement Accounting***. In this section, you will find the following information:

- A description of the accounting procedure for Station Power billing adjustments (see "Station Power Accounting Procedure").

13.1 Station Power Accounting Procedure

In accordance with the June 28, 2001 FERC order regarding PJM's treatment of generator station power (Docket No. ER01-1936, effective July 1, 2001), PJM performs monthly netting of generator output and station power consumption to determine if the following billing adjustments are required:

- Adjustment to Spot Market Energy billing (for third-party supply of station power)
- Adjustment to Non-firm Point-to-point Transmission Service billing (for remote self-supply of station power)

The net generation MW quantities that are used in PJM energy market settlements (excluding energy consumed for pumping at pumped storage hydro facilities, for compressors at compressed air energy storage resources, for synchronous condensing, and solely Direct Charging Energy for Energy Storage and Open-Loop Hybrid Resources) are netted over the calendar month for each generator and for each generation owner. The end-use charging of an electric vehicle (EV) battery used for operating the vehicle would be treated as end-use load, even if the EV battery is also used to provide wholesale regulation or other ancillary services. Any billing adjustments required for generators or generation owners with net negative totals are calculated and included in the subsequent month's billing cycle.

Five minute generation MW and hourly generation MWh values are retrieved from the PJM Power Meter system for generators that report revenue meter data to PJM Power Meter.

If a superseding arrangement for the treatment of station power exists between a generation owner and the applicable electric distribution company (EDC) in whose service territory the generator resides, then net station power consumption (i.e., negative net generation MW) is not reported to PJM for settlements purposes. In this case, compensation for station power consumption is handled bilaterally between the EDCs and generation owners and PJM billing adjustments for station power are not applicable.

13.1.1 Third-Party Supply

For each individual business entity with ownership rights to one or more generators (or joint-owned shares of generators) in PJM, their net generation MWh are netted for the month to determine if a third-party retail purchase of station power occurred. If a generation owner's

monthly net generation MWh is negative, then that third-party supply of net station power consumption is allocated to their generators that were off-line during the month based on a rank order methodology.

Starting with the generator with the most negative net MWh for the month, the entity's net MWh quantity is allocated (in 0.001 MW increments) across all five minute intervals in the month where that generator had net negative MW. If additional net negative MWh remains for the generation owner after being allocated to the first generator, the remaining MWh are allocated to each generator with net negative MW based on the magnitude of the generators' net MWh (from highest to lowest) until it is all allocated.

A PJM billing adjustment will shift the financial responsibility for the wholesale value of the third-party sale of station power consumption from the generation owner to the appropriate EDC. The allocated MW are priced at the applicable generator's real-time five minute LMP divided by 12 and accumulated for the month to determine the spot market energy billing adjustment. The billing adjustment is a credit to the generation owner's billing account and a charge to the applicable EDC's billing account. The MWh allocations will be provided to the EDC and may be included in PJM's retail load reconciliation process, if desired, to facilitate the retail billing process between the EDC and the generation owner (or its designated PJM network customer).

13.1.2 Remote Self-Supply

For each generating unit (or for multiple generating units with station power requirements metered at a common source) or joint-owned share of a generating unit, the generation MWh are netted for the month to determine if station power was remotely self-supplied. If a generator's monthly net generation MWh is negative (excluding that which was determined to be supplied by a third party), then PJM non-firm point-to-point transmission service charges are determined by multiplying the net negative MWh quantity by the current discounted rate of $0.67/MWh. Through PJM billing adjustments, the non-firm charges are assessed to the generation owner's billing account and allocated as credits to all firm point-to-point and network integration transmission customers in accordance with the PJM Open Access Transmission Tariff section 27a in proportion to their demand charges for that month.

Section 14: Unscheduled Transmission Service (Loop Flow) Accounting

Welcome to the Unscheduled Transmission Service (Loop Flow) Accounting section of the ***PJM Manual for Operating Agreement Accounting***. In this section, you will find the following information:

- A description of the accounting procedure for Unscheduled Transmission Service (Loop Flow) (see “Unscheduled Transmission Service (Loop Flow) Accounting Procedure”).

14.1 Unscheduled Transmission Service (Loop Flow) Accounting Procedure

When there are agreements between PJM and others for compensation to be paid or received for unscheduled transmission service (loop flow) into or out of the PJM Region, the net compensation received shall be included in Balancing Congestion charges and distributed according to the methodology in Section 8 of this manual.

Section 15: Market Revenue Neutrality Offset Accounting

Welcome to the Market Revenue Neutrality Offset Accounting section of the PJM Manual for Operating Agreement Accounting. In this section, you will find the following information:

- A description of how Market Revenue Neutrality Offset and Opportunity Cost Credit Owed are used within the Reserve Market accounting (see “Market Revenue Neutrality Offset Overview”).
- A description of the calculation procedure for Market Revenue Neutrality Offset (see “Market Revenue Neutrality Offset”).
- A description of the calculation procedure for Opportunity Cost Credit Owed (see “Opportunity Cost Credit Owed”).

15.1 Market Revenue Neutrality Offset Overview

A resource’s energy and reserve assignments can differ between the day-ahead and real-time markets. To the extent a resource’s assignment in one market is increased in real-time (as compared to day-ahead), its assignment in another market may need to be decreased in order to ensure the resource’s capability is not exceeded. This generally leads to balancing settlements with additional revenue earned in the market where the assignment was increased and decreased revenue in the market where the assignment was decreased (in the form of a buy back from the day-ahead position). The cost of the buy back from the day-ahead reserve position caused by the reduction is assignment is included in the Lost Opportunity Cost Credit calculation for each reserve market.

However, the amount of Lost Opportunity Cost Credit paid to cover this buy back can be reduced by two values: the Market Revenue Neutrality Offset or the Lost Opportunity Cost Credit Owed.

The Market Revenue Neutrality Offset calculation recognizes any additional profit (revenue above cost) earned in the market(s) with the increased real-time assignment(s) and uses that additional profit to offset any cost incurred from buying back its day-ahead reserve assignments in the markets where the assignment was decreased in real-time. The Market Revenue Neutrality Offset reduces the Lost Opportunity Cost Credit for each reserve market so that a resource is not made whole for costs that were recovered via another market. In the event the additional profit exceeds the additional costs created by this shift in assignments, the Market Revenue Neutrality Offset is capped at the amount of those costs.

In order to be eligible to recover any opportunity cost incurred from the buy back from the day-ahead assignment in a reserve market, a resource cannot act in a manner that results in the resource’s real-time reserve assignment being less than its day-ahead assignment. If a resource’s own actions cause the need to buy back from the day-ahead reserve assignment,

the cost attributable to that buy back is captured as Lost Opportunity Cost Owed, which is an offset in the Lost Opportunity Cost Credit calculation that reduces the amount otherwise owed to the resource.

15.2 Market Revenue Neutrality Offset

Market Revenue Neutrality Offset is calculated for each Real-time Settlement Interval, if eligible. Each resources assigned reserves in the day-ahead market is eligible for the Market Revenue Neutrality Offset, unless any of the following apply:

- The resource's real-time reserve assignment (Synchronized, Non-Synchronized, and/or Secondary) decreases due to the resource being self-scheduled to provide energy, another reserve product or Regulation;
- The resource reduces its flexibility in real-time such that it no longer qualifies for that reserve product in real-time;
- The resource's Final Offer is less than its Committed Offer for energy
- The resource trips offline or otherwise becomes unavailable in real-time;
- The resource does not follow the dispatch direction provided as described in Section 5.2.1 and Section 11.2.2 of this PJM Manual
- The resource fails to come online and reach Economic Minimum output within 30 minutes (Secondary Reserve only)
- The resource increases its Synchronized Reserve offer price in the Real-time Synchronized Reserve Market from its offer price in the Day-ahead Synchronized Reserve market (Synchronized Reserve only)

PJM determines a Market Revenue Neutrality Offset for the Synchronized Reserve, Non-Synchronized Reserve, and Secondary Reserve markets. When a resource is assigned in the multiple reserve markets and/or the energy market for the same Real-time Settlement Interval, the additional profits earned in each market are summed together and then allocated back out to each reserve market based on that market's ratio share of the total costs across all reserve markets due to buying back from the day-ahead assignments.

As example, a resource is assigned both Synchronized Reserve and Secondary Reserve MWs in the Day-ahead Market, however, in real-time, PJM shifts the assignment of those MWs to the Energy Market. PJM will determine the increase in profit earned in the energy market and allocate it to the Synchronized Reserve and Secondary Reserve markets using the ratio share of cost of the buy back for the given market to the total cost of the buy back in both the Synchronized Reserve and Secondary Reserve markets.

The first step in the Market Revenue Neutrality Offset calculation is to calculate the additional profit a Market Participant earned across all energy and/or reserve markets where the resource

had an increase in its real-time assignment as compared to day-ahead. This is referred to as the Total Value from Increases portion of the Market Revenue Neutrality Offset calculation.

- Total Value from Increases = Sum(Value from Energy Market + Value from Synchronized Reserve Market + Value from Non-Synchronized Reserve Market + Value from Secondary Reserve Market)
  - Value from Energy Market = ((RT Energy MW – DA Energy MW) * RT LMP) – Incremental energy offer ($) for the increased energy MW (i.e., area under the offer curve)
  - Value from Synchronized Reserve Market = MIN(any Synchronized Reserve Market revenue in excess of its offer plus opportunity costs, Balancing revenue above cost due to the increased Synchronized Reserve assignment)
  - Value from Non-Synchronized Reserve Market = MIN(any Non-Synchronized Reserve Market revenue in excess of its offer plus opportunity costs, Balancing revenue above cost due to the increased Non-Synchronized Reserve assignment)
  - Value from Secondary Reserve Market = MIN(any Secondary Reserve Market revenue in excess of its offer plus opportunity costs, Balancing revenue above cost due to the increased Secondary Reserve assignment)

The second step in the calculation is to calculate the additional lost opportunity cost the resource incurred in the reserve markets where it had a decrease in its real-time assignment as compared to its day-ahead assignment. This is referred to as the LOC Credit Due to Reduction portion of the Market Revenue Neutrality calculation.

- LOC Credit Due to Reduction for Synchronized Reserve = MIN (Max(0, (Day-ahead Synchronized Reserve Offer Amount + Day-ahead Synchronized Reserve Opportunity Cost – Day-ahead Synchronized Reserve Market Clearing Price Credit – Balancing Synchronized Reserve Market Clearing Price Credit Due to Reduction)), ABS(Balancing Synchronized Reserve Market Clearing Price Credit Due to Reduction))
  - Balancing Synchronized Reserve Market Clearing Price Credit Due to Reduction = (Real-time Synchronized Reserve Market Assignment – Day-Ahead Synchronized Reserve Market Assignment) * RT SRMCP/12
- LOC Credit Due to Reduction for Non-Synchronized Reserve = MIN (Max (0, (0- Day-ahead Non-Synchronized Reserve Market Clearing Price Credit – Balancing Non-Synchronized Reserve Market Clearing Price Credit Due to Reduction)), ABS(Balancing Non-Synchronized Reserve Market Clearing Price Credit Due to Reduction))
  - Balancing Non-Synchronized Reserve Market Clearing Price Credit Due to Reduction = (Real-time Non-Synchronized Reserve Market Assignment – Day-ahead Non-Synchronized Reserve Market Assignment) * RT NSRMCP/12
- LOC Credit Due to Reduction for Secondary Reserve = MIN (Max (0, (Day-ahead Secondary Reserve Opportunity Cost – Day-ahead Secondary Reserve Market Clearing Price Credit – Balancing Secondary Reserve Market Clearing Price Credit Due to

Reduction)), ABS(Balancing Secondary Reserve Market Clearing Price Credit Due to Reduction))

- Balancing Secondary Reserve Market Clearing Price Credit Due to Reduction = (Real-time Secondary Reserve Market Assignment – Day-ahead Secondary Reserve Market Assignment) * RT SecRMCP/12

The third step is to allocate the Market Revenue Neutrality Offset value to each reserve market where the resource had a decrease in the real-time assignment using the ratio share of the resource's LOC Credits Due to Reduction in all reserve markets. This is the value that then offsets the Lost Opportunity Cost Credit paid to the resource in that reserve market.

- Market Revenue Neutrality Offset for a given reserve market = Min (Total Value from Increases (from Step 1) * LOC Credit Due to Reduction in the given reserve market (from Step 2)/ Sum(resource's LOC Credits Due to Reduction in all reserve markets), LOC Credit Due to Reduction in the given reserve market (from Step 2))

15.3 Opportunity Cost Credit Owed

Opportunity Cost Credit Owed is calculated for each Real-time Settlement Interval where a resource's real-time reserve assignment in a given market was decreased from its day-ahead reserve assignment in that market, and where the resource is not eligible for the Market Revenue Neutrality Offset as described in section 15.2 above.

- Opportunity Cost Credit Owed Due to Reduction for Synchronized Reserve = LOC Credit Due to Reduction for Synchronized Reserve as calculated in Section 15.2 of this PJM Manual
- Opportunity Cost Credit Owed Due to Reduction for Non-Synchronized Reserve = LOC Credit Due to Reduction for Non-Synchronized Reserve as calculated in Section 15.2 of this PJM Manual
- Opportunity Cost Credit Owed Due to Reduction for Secondary Reserve = LOC Credit Due to Reduction for Secondary Reserve as calculated in Section 15.2 of this PJM Manual

Section 16: Financial Transmission Rights Auctions Settlement

Welcome to the Financial Transmission Rights Auctions Settlement section of the **PJM Manual for Operating Agreement Accounting**. In this section, you will find the following information:

- An overview of the Financial Transmission Rights (FTR) Auctions settlement (see "FTR Auctions Settlement Overview").
- How charges for FTR Auction transactions are calculated for FTR Auction buyers (see "FTR Auction Buyers' Charges").
- How credits for FTR Auction transactions are calculated for FTR Auction sellers (see "FTR Auction Sellers' Credits").
- How FTR Auction revenues are allocated (see "Allocation of FTR Auction Revenues").

16.1 FTR Auctions Settlement Overview

Throughout the year, PJM oversees the process of selling and buying FTRs through FTR auctions. Market Participants may purchase/sell FTRs by participating in the Long-term, Annual, and Monthly FTR auctions. The Long-term and Annual FTR auctions offer for sale the entire transmission entitlement that is available on the PJM system on a long-term basis. The Monthly FTR Auctions provide a method of auctioning the residual FTR capability that remains on the PJM Transmission System after the Annual auction is conducted. The Annual FTR auction is a multi-round auction consisting of four rounds. FTRs that are purchased in one round may be offered for sale in subsequent rounds of the Annual auction. The Monthly auctions allow FTR market participants an opportunity to offer for sale any FTRs that they currently hold and to buy the residual FTR capability that remains on the PJM Transmission System after the Annual auction is conducted. PJM conducts the monthly auctions once a month. FTRs can be in the form of an option or an obligation. For discussion purposes, FTR obligations and FTR options will be referred to as FTRs, unless otherwise noted. Each FTR acquired in the Annual FTR Auction entitles the holder to credits of Day-ahead Transmission Congestion Charges for one calendar year. Each FTR acquired in the monthly auctions entitles the holder to credits of Day-ahead Transmission Congestion Charges for one calendar month. Auction Revenue Rights (ARRs) are the mechanism by which the proceeds from the FTR auctions are allocated. An ARR holder may "self-schedule" an FTR obligation into the Annual FTR auction as a "price-taker" auction buy bid. The "self-scheduled" FTR must have exactly the same source and sink points as the ARR. This feature may only be used in Round 1 of the Annual FTR auction.

PJM is responsible for administering the PJM FTR Auctions; including performing the following settlement functions:

- settlement of awarded auction FTRs
- allocation of FTR Auction revenues to ARR holders
- rendering bills to buyers and sellers

- receiving payments from and dispersing payments to buyers and sellers

The FTR Auctions also facilitate the trading of FTRs by PJM Members. Winning bidders pay market price for FTRs acquired in the auctions; FTR sellers are paid market price for the FTRs they surrender to PJM. The winning quotes are determined by the set of simultaneously feasible FTRs with the highest total auction value, as determined by the bids of the buyers and taking into account the reservation prices of the sellers. PJM will calculate the clearing prices for all FTR obligations at all buses, regardless of whether they are bought or sold in the auctions. PJM will calculate the clearing prices for all FTR options for all valid option paths, regardless of whether they are bought or sold in the auctions. All auction revenues, net of payments to entities selling FTRs into the auctions, are allocated among ARR holders. Additional details on the FTR Auctions can be found in PJM Manual 6:Financial Transmission Rights, Section, 6. Additional details on ARRs can be found in PJM Manual 6: Financial Transmission Rights, Section, 2-4.

16.2 FTR Auction Buyers' Charges

PJM Market buyers are charged for FTR Auction purchases based on the FTR awarded (in 0.1 MW increments) and the market clearing price. PJM calculates a market clearing price for each FTR based on the set of simultaneously feasible FTRs with the highest net total auction value as determined by the bids of buyers and taking into account the reservation prices of the sellers. The market clearing price for all FTRs is the difference between prices at specified pairs of receipt and delivery points as determined by the auctions. The market clearing price for an FTR obligation can be computed directly from the nodal clearing prices and can be a negative value. The market clearing price for an FTR option is a function of the shadow price of each binding constraint and cannot be computed directly from nodal prices. The market clearing price of an FTR option can never be a negative value. The FTR Auction charge is the product of the Market Buyer's FTR purchase and the market clearing price. If a Real-time Market Suspension greater than twenty-four (24) consecutive hours and a Day-ahead Market Suspension occurs for an Operating Day, the FTR Auction Charge will be $0 in proportion to the number of hours of the Real-time Market Suspension in the Operating Day. The Real-time Market Suspension may span up to two Operating Days.

PJM Actions

- PJM prepares a list of FTR Auction buyers.
- PJM accounting process retrieves the following information:
  - each participant's daily FTR Auction purchases (MW)
  - each FTR market clearing price ($/MW)
- PJM accounting process calculates the monthly FTR Auction charge for each FTR as follows:

$$\textit{FTR Auction Charge} = \textit{FTR Purchased}\ (\textit{MW}) * \textit{Market Clearing Price}$$

- PJM accounting process sums the FTR auction charges for each FTR Auction participant to calculate the participant's total monthly FTR Auction charge.

16.3 FTR Auction Sellers' Credits

PJM Market sellers are credited for FTR Auction sales based on the FTR awarded (in 0.1 MW increments) and the market clearing price. PJM calculates a market clearing price for each FTR based on the set of simultaneously feasible FTRs with the highest net total auction value as determined by the bids of buyers and taking into account the reservation prices of the sellers. The market clearing price for all FTRs is the difference between prices at specified pairs of receipt and delivery points as determined by the auctions. The market clearing price for an FTR obligation can be computed directly from the nodal clearing prices and can be a negative value. The market clearing price for an FTR option is a function of the shadow price of each binding constraint and cannot be computed directly from nodal prices. The market clearing price of an FTR option can never be a negative value. The FTR Auction credit is the product of the Market Seller's FTR sales and the market clearing price.

PJM Actions

- PJM prepares a list of FTR Auction sellers.
- PJM accounting process retrieves the following information:
  - each participant's FTR Auction sales (MW)
  - each FTR market clearing price ($/MW)
- PJM accounting process calculates the monthly FTR Auction credit for each FTR as follows:

$$\textit{FTR Auction Credit} = \textit{FTR Sold (MW)} * \textit{Market Clearing Price}$$

- PJM accounting process sums the FTR auction credits for each FTR Auction participant to calculate the participant's total monthly FTR Auction credit.

16.4 Allocation of FTR Auction Revenues

All auction revenues, net of payments to entities selling FTRs into the auctions, are allocated among ARR holders as ARR credits. The amount of credit that each ARR holder should receive is based on the economic value or Target Allocation of the ARR. ARR Target Allocations will be based on the FTR obligation clearing prices from each round of the Annual FTR auction. The ARR Target Allocation can be positive or negative and as such, an ARR can be either a financial benefit or a liability to the holder.

PJM Actions

- PJM prepares a list of ARR holders.
- PJM accounting process retrieves the following information:

- ARR Target Allocation LMP based on the nodal clearing prices for each round of the Annual FTR auction

- PJM accounting process calculates the FTR auction allocation of revenue credits to ARR holders as follows:

$$ARR\ Target\ Allocation = \left(\frac{ARR\ \ MW}{\#\ \ of\ \ rounds}\right) * \left(LMP_{Delivery\ \ (Sink)} - LMP_{Receipt\ \ (Source)}\right)$$

- PJM accounting process allocates the FTR auction allocation of revenue credits to ARR holders for a month as follows:
  - Each day, the total of all daily ARR Target Allocations are compared to the total net revenues of the applicable Monthly FTR auction (divided by the number of days in the month) plus the total net revenues of the Annual FTR auction (divided by the number of days in planning period) plus the total net revenues of the applicable Long-term FTR auction (divided by the number of days in the planning period).
  - If sufficient FTR Auction revenues are collected to satisfy ARR Target Allocations then total ARR credits equal total ARR Target Allocations.
  - If excess FTR Auction revenues remain after this allocation, or if no deficiencies exist, all remaining FTR auction revenue is treated as excess congestion charges and is distributed starting with Stage One as described in Section 8 of this PJM Manual.
  - If insufficient FTR Auction revenues are collected to satisfy ARR Target Allocations then ARR credits are pro-rated in proportion to ARR Target Allocations which have a positive Target Allocation value. ARRs which have a negative Target Allocation value are assigned the full Target Allocation value as a negative ARR credit. If the ARR credits are pro-rated, the difference between ARR Target Allocations and ARR credits are called ARR deficiencies. The ARR deficiencies may be funded by Annual Excess Congestion Charges starting with Stage Four as explained in Section 8 of this PJM Manual.

Section 17: Auction Revenue Rights Settlements

Welcome to the Auction Revenue Rights Settlements section of the ***PJM Manual for Operating Agreement Accounting***. In this section, you will find the following information:

- An overview of the Auction Revenue Rights (ARR) settlements (see “ARR Settlements Overview”).
- How daily Reassignment of ARRs occurs as load changes within a zone within the planning period (see “Daily Reassignment of ARRs as load changes”).
- How Long-term, Annual and Monthly FTR Auction revenues are allocated (see “Allocation of Long-term, Annual and Monthly FTR Auction Revenues”).

17.1 ARR Settlements Overview

Auction Revenue Rights are financial entitlements allocated annually to PJM Network Integration and Firm Point-to-Point Transmission Service customers that entitle the holder to receive an allocation of the net revenues from the PJM Long-term, Annual and Monthly FTR Auctions. ARRs can be acquired by three mechanisms: 1) Annual ARR allocation where ARRs requested by customers are allocated on an annual basis; 2) Daily reassignment of ARRs whereby ARRs that were allocated for the planning period will be reassigned on a proportional basis within a zone as load shifts between LSEs within the planning period; and 3) Firm Point-to-Point Transmission Service customers have the option to request ARRs consistent with their transmission reservation. Firm Point-to-Point Transmission Service ARR requests will have the same duration as the transmission service, which may be one year, one month, one week or one day. PJM Transmission Customers taking firm transmission service for the delivery of Direct Charging Energy to Energy Storage Resources or to Open-Loop Hybrid Resources are not eligible for allocation of Auction Revenue Rights.

ARRs awarded must be simultaneously feasible to ensure that FTR Auction revenues are adequate to cover the economic value of all ARRs. Additional details on ARRs can be found in PJM Manual 6: Financial Transmission Rights.

Each holder of an ARR will be entitled to revenues from the Long-term, Annual and Monthly FTR Auctions based on the economic value of the ARR. The ARR economic value or ARR Target Allocation is equal to the ARR MW amount divided by the number of rounds in the Annual FTR Auction times the price difference from the ARR sink point to the ARR source point. The LMP values used in the above calculation for settlements for annual ARRs will be based on the nodal clearing prices for FTR obligations from each round of the Annual FTR auction.

The ARR Target Allocation can be a benefit or a liability. The hourly economic value of an ARR is positive (a benefit) when the nodal LMP at the sink point (point of delivery) is higher than the nodal LMP at the source point (point of receipt). The hourly economic value of an ARR is

negative (a liability) when the nodal LMP at the source point (point of receipt) is higher than the nodal LMP at the sink point (point of delivery).

Transmission customers with negative ARR Target Allocations will always receive 100% of their ARR Target Allocations as negative ARR Credits. The inclusion of these negative credits effectively increases the amount that is available to be allocated as credits to the transmission customers with positive ARR Target Allocations.

If sufficient FTR Auction revenues are collected to satisfy ARR Target Allocations, then total ARR credits equal total ARR Target Allocations. If insufficient FTR Auction revenues are collected to satisfy ARR Target Allocations, then ARR credits are pro-rated in proportion to ARR Target Allocations which have a positive Target Allocation value. ARRs which have a negative Target Allocation value are assigned the full Target Allocation value as a negative ARR credit. If the ARR credits are pro-rated, the difference between ARR Target Allocations and ARR credits are called ARR deficiencies. Settlements for the FTR Auctions and the corresponding ARRs will be performed on a monthly basis.

Within the planning period, as load changes from one LSE to another within a transmission zone, a proportionate share of the ARRs defined to sink into that zone are reassigned from the old LSE to the new LSE. See Section 17.2 for details on the daily reassignment of ARRs.

Each holder of an annual ARR can convert the ARR into an FTR by “self-scheduling” the FTR into the first round of the Annual FTR auction on the exact same path as the ARR or the holder may retain the allocated ARR and receive the associated allocation of revenues from the FTR auctions.

PJM is responsible for performing the following settlement functions:

- settlement of awarded ARRs
- reassignment of ARRs
- allocation of Long-term FTR Auction revenues
- allocation of Annual FTR Auction revenues
- allocation of Monthly FTR Auction revenues
- rendering bills to buyers and sellers
- receiving payments from and dispersing payments to buyers and sellers

17.2 Daily Reassignment of ARRs as load changes

Within the planning period, as load changes from one LSE to another within a transmission zone, a proportionate share of the ARRs defined to sink into that zone are reassigned from the old LSE to the new LSE. The reassignment of ARRs is an automatic process that is conducted on a daily basis. ARRs are only reassigned from those LSEs that have lost load in a zone and have a net positive economic ARR position in that zone. An LSE that loses load will lose ARR

MWs in proportion to the amount of load lost and this same proportion will reduce each individual ARR assigned to the LSE.

PJM Actions:

On a daily basis, ARRs are reassigned using the following procedure:

- PJM compares each LSEs Network Service Peak Load in a zone to the Network Service Peak Load of the previous day.
- For each LSE losing load and having a net positive economic ARR position for that zone, the percentage of load lost for each LSE is determined. Each ARR, owned by the LSE losing load and having a net positive economic ARR position, is reduced by the percentage of load lost.
- PJM assigns that total set of forfeited ARRs to LSEs gaining load in the zone based on a percentage of the MW load gain divided by the total MWs of load shifting in the zone.

17.3 Allocation of Long-term, Annual and Monthly FTR Auction Revenues

All Long-term, Annual and Monthly FTR auction revenues are allocated to holders of ARRs on a proportional basis as ARR credits.

PJM Actions

- PJM prepares a list of ARR holders.
- PJM accounting process retrieves the following information:
  - ARR target allocation LMP based on the nodal clearing prices for each round of the Annual FTR auction
- PJM accounting process calculates the FTR auction allocation of revenue credits to ARR holders as follows:

$$ARR\ Target\ Allocation = (ARR\ MW\ /\ \#\ of\ rounds) * (LMP_{Delivery} - LMP_{Receipt})$$

- PJM accounting process allocates the net FTR auction allocation of revenue credits to ARR holders for a month as follows:
  - Each day, the total of all daily ARR Target Allocations are compared to the total net revenues of the applicable Monthly FTR auction (divided by the number of days in the month) plus the total net revenues of the Annual FTR auction (divided by the number of days in planning period) plus the total net revenues of the applicable Long-term FTR auction (divided by the number of days in the planning period).
  - If sufficient FTR Auction revenues are collected to satisfy ARR Target Allocations then total ARR credits equal total ARR Target Allocations.

- If excess FTR Auction revenues remain after this allocation, all remaining FTR auction revenue is treated as excess congestion credits and is distributed starting with Stage One as described in the “Monthly Allocation of Excess Congestion Charges” Section of Section 8 Transmission Congestion Accounting in the **PJM Manual for Operating Agreement Accounting**.
- If insufficient FTR Auction revenues are collected to satisfy ARR Target Allocations then ARR credits are pro-rated in proportion to ARR Target Allocations which have a positive Target Allocation value. ARRs which have a negative Target Allocation value are assigned the full Target Allocation value as a negative ARR credit. If the ARR credits are pro-rated, the difference between ARR Target Allocations and ARR credits is called ARR deficiencies. The ARR deficiencies may be funded by Annual Excess Congestion Charges starting with Stage Four as explained in the “Monthly Allocation of Excess Congestion Charges” Section of Section 8 Transmission Congestion Accounting in the **PJM Manual for Operating Agreement Accounting**.

Section 18: Inadvertent Interchange Accounting

Welcome to the Billing section of the ***PJM Manual for Operating Agreement Accounting***. In this section, you will find the following information:

- A description of the accounting procedures for determining PJM inadvertent interchange charge allocations (see “Inadvertent Interchange Billing”).

18.1 Inadvertent Interchange Billing

Inadvertent Interchange is the hourly difference between the net actual energy flow and the net scheduled energy flow into or out of the PJM control area in that hour. This MWh quantity may be a positive or negative value in any given hour and is priced at the PJM load weighted-average LMP for the hour. The value of this energy is allocated to all Market Participants based on real-time load (excluding losses and excluding purchases of Direct Charging Energy) ratio shares in the PJM Region. This results in positive or negative Inadvertent Energy charges for each hour.

PJM Actions

- PJM calculates the hourly inadvertent interchange MWh
- PJM calculates the hourly load weighted-average real-time LMP for the PJM RTO
- PJM calculates the hourly value of inadvertent interchange by multiplying the inadvertent interchange MWh by the PJM load weighted-average LMP
- PJM allocates PJM Inadvertent Interchange charges (+/-) to all PJM Market Participants in proportion to their hourly real-time load (excluding losses and excluding purchases of Direct Charging Energy) ratio share
- Reconciliation for Inadvertent Interchange Charges
- PJM will calculate reconciled Inadvertent Interchange charges for EDCs and Retail Load Aggregators (a.k.a. Electric Generation Suppliers) for past monthly billings on a two month lag that were based on load ratio shares. The reconciliation kWh data must be supplied to PJM by the EDCs no later than the last day of the month that is two months after the original billing month. For example, all reconciliation data for January must be submitted by March 31 at 23:59. The reconciliation kWh data represents the difference between the scheduled Retail Load Responsibility or Wholesale Load Responsibility InSchedule (in MWh) and the “actual” usage based on metered data. This hourly kWh data must be reported separately for each applicable InSchedule contract.
- PJM calculates the Inadvertent Interchange charge reconciliations by multiplying the kWh data (de-rated for transmission losses) by the PJM system-wide system energy price (in $/MWh) for that hour. These charge reconciliations are then totaled for the month for each EDC or Retail Load Aggregator. Note that the reconciliation for Inadvertent Interchange

charges for a month may be either a positive or a negative value, and may even be such that the reconciled load responsibility MWh results in a negative load quantity.

Section 19: Secondary Reserve Accounting

Welcome to the Secondary Reserve Accounting section of the ***PJM Manual for Operating Agreement Accounting***. In this section, you will find the following information:

- A description of how Secondary Reserves are provided and accounted for in the PJM Energy Markets (see "*Secondary Reserve* Accounting Overview").
- How credits are calculated for providers of Secondary Reserve (see "Credits for *Secondary* Reserve").
- How the total cost of Secondary Reserve is allocated (see "Charges for *Secondary* Reserve").
- How Secondary Reserve charge reconciliations are calculated (see "Reconciliation for *Secondary* Reserve Charges").

19.1 Secondary Reserve Accounting Overview

Secondary Reserve shall be supplied from resources located within the metered boundaries of PJM that are on-line or off-line and able to provide response within 10 and 30 minutes. Secondary Reserve resources include generators and Economic Load Response Participants.

The total PJM 30-minute Reserve Requirement is defined as the amount of reserves to be supplied from Synchronized and Non-Synchronized resource, available within 30-minutes. Additional details on the 30-minute Reserve requirements can be found in the PJM Manual 13: Emergency Operations

Secondary Reserve credits are awarded to resources in both the Day-ahead and Real-time Markets based on assignment and RT MW output. The Secondary Reserve offer price for a resource is $0.

Each Market Participant that is a Load Serving Entity (LSE) or secondary buyer that is not part of an agreement to share reserves with external entities subject to the requirements in NERC Reliability Standard BAL-002 incurs a Secondary Reserve Obligation based on their Load Ratio Share and applicable reserve location's assignments during that hour. During hours when the Secondary Reserve Market Clearing Price (SecRMCP) is the same throughout the entire RTO reserve zone, an LSE's Secondary Reserve Obligation is equal to its Load Ratio Share of the RTO reserve zone times the amount of Secondary Reserve assigned for all Real-time Settlement Intervals for the RTO Reserve zone. During hours when the SecCRMCP is different between the RTO Reserve zone and the Reserve sub-zone, an LSE's Secondary Reserve Obligation will be calculated based on their load in active sub-zone and/or the portion of the RTO Reserve Zone outside of the active sub-zone (the "non sub-zone"). The LSE's active sub-zone Secondary Reserve Obligation is equal to its Load Ratio Share within that active sub-zone times the amount of Secondary Reserve assigned in that active sub-zone. The LSE's

Secondary Reserve Obligation in the non sub-zone is equal to its Load Ratio Share in the non sub-zone times the amount of Secondary Reserve assigned in the non sub-zone portion of the RTO.

Participants may fulfill their Secondary Reserve obligations by entering bilateral arrangements with other PJM Market Participants, or purchasing Secondary Reserve from the PJM Secondary Reserve Market.

19.2 Credits for Secondary Reserve

Secondary Reserve credits are paid in both Day-ahead and Real-time Secondary Reserve Markets to Market Participants that supply their resource to PJM. The credits for the Day-ahead and Real-time Secondary Reserve Markets appear on the billing statement as two separate billing line items:

- Day-ahead Secondary Reserve Credits = Sum (Day-ahead Secondary Reserve Market Clearing Price Credits) for the days in the billing period
- Balancing Secondary Reserve Credits = Sum (Balancing Secondary Reserve Market Clearing Price Credits + Secondary Reserve Lost Opportunity Cost Credits) for the days in the billing period

Secondary Reserve credits for jointly-owned generators supplying Secondary Reserves are allocated to the owners based on their ownership share.

19.2.1 Day-ahead Secondary Reserve Market Clearing Price Credit

Day-ahead Secondary Reserve Market Clearing Price credits are paid to a resource that is assigned Secondary Reserve MWs by PJM within the Day-ahead Market to satisfy the 30-minute Reserve Requirement. If a Day-ahead Market Suspension occurs, Day-ahead Secondary Reserve Market Clearing Prices will be set to $0/MWh and Day-ahead Secondary Reserve assignments will be set to 0 MWh.

PJM Actions

- PJM retrieves the following information for Day-ahead Secondary Reserve Market Clearing Price credit:
  - Day-ahead Secondary Reserve assignments (MW)
  - Day-ahead Secondary Reserve Market Clearing Price (DA SecRMCP) ($/MWh)
- PJM calculates for each hour the Day-ahead Secondary Reserve Market Clearing Price credit for each eligible resource by multiplying the Day-ahead Secondary Reserve MWs assigned by the Day-ahead Secondary Reserve Market Clearing Price.
  - Day-ahead Secondary Reserve Market Clearing Price Credit = Day-ahead Secondary Reserve MW * DA SecRMCP

19.2.2 Balancing Secondary Reserve Market Clearing Price Credit

Balancing Secondary Reserve Market Clearing Price credits are paid to a resource that is assigned Secondary Reserve within the Real-time Market to satisfy the 30-minute Reserve Requirement. During a Real-time Market Suspension, if PJM is assigning Secondary Reserves, Balancing Secondary Reserve Market Clearing Price Credits will be calculated using Real-time Secondary Reserve Market Clearing Prices calculated according to the rules in Manual 11, Section 4.4.6.

PJM Actions

- PJM retrieves the following information for Balancing Secondary Reserve Market Clearing Price credit:
  - Real-time Secondary Reserve assignments (MW)
  - Economic Maximum MW
  - Real-time Secondary Reserve Maximum MW
  - Real-time MW output
  - Day-ahead Secondary Reserve assignments (MW)
  - Real-time Synchronized Reserve assignments (MW)
  - Real-time Secondary Reserve Market Clearing Price (RT SecRMCP) ($/MWh)
  - Secondary Reserve Shortfall MW
- PJM calculates for each Real-time Settlement Interval the Balancing Secondary Reserve Market Clearing Price credit for each eligible resource by taking the difference between the capped Real-time Secondary Reserve assignment and Day-ahead Secondary Reserve assignments and multiplying it by the RT SecRMCP, then dividing the product by 12.
  - Balancing Secondary Reserve Market Clearing Price Credit = ((Capped Real-time Secondary Reserve Assignment – Day-ahead Secondary Reserve Assignment – Secondary Reserve Shortfall MW) * RT SecRMCP) / 12
  - Capped Real-time Secondary Reserve Assignment = Minimum (Real-time Secondary Reserve MW, Max((Minimum (Economic Maximum MW, Real-time Secondary Reserve Maximum MW) – Real-time MW Output – Real-time Synchronized Reserve MW),0))
  - Secondary Reserve Shortfall MW =
    - For a real-time offline generation resource that does not reach Economic Minimum output within 30 minutes as instructed by PJM, Secondary Reserve Shortfall MW = Capped Real-time Secondary Reserve assignment. This shortfall MW will be applied to all prior intervals in which the resource was assigned to provide real-time Secondary Reserve starting at the later of (A) the last interval the resource was online or (B) the beginning of that Operating Day and continuing up to the interval the resource failed to come online as instructed by PJM.

- For a real-time Economic Load Response that does not reduce by at least the Economic Minimum within 30 minutes as instructed by PJM, Secondary Reserve Shortfall MW = Capped Real-time Secondary Reserve assignment. This shortfall MW will be applied to all prior intervals in which the resource was assigned to provide real-time Secondary Reserve starting at the later of (A) the last interval the resource reduced load at PJM's instruction or (B) the beginning of that Operating Day, through the earlier of (C) the next interval in which the resource is dispatched to reduce load or (D) the end of the Operating Day.

19.2.3 Secondary Reserve Lost Opportunity Cost Credit

PJM calculates a Secondary Reserve Lost Opportunity Cost Credit for pool-scheduled resources if the Secondary Reserve Lost Opportunity Cost (excluding any reduction for a stability limit) is greater than the total SecRMCP Credits (Day-ahead and Balancing) received through the Secondary Reserve Market for each Real-time Settlement Interval. If the resulting amount is negative, then the credit is $0.

If a Day-ahead Market Suspension occurs, Day-ahead Secondary Reserve prices and quantities will be zero. During a Real-time Market Suspension, if PJM is assigning Secondary Reserves, the Real-time Synchronized Reserve Opportunity Cost will be calculated using Real-time LMPs calculated per Manual 11, Section 2.21.

PJM Actions

- PJM retrieves the following information for the Secondary Reserve Lost Opportunity Cost credit:
  - Day-ahead Secondary Reserve Market Clearing Price Credit ($)
  - Balancing Secondary Reserve Market Clearing Price Credit ($)
  - Market Revenue Neutrality Offset ($) (as determined and calculated in Section 15 of this PJM Manual)
  - Secondary Reserve Opportunity Cost Credits Owed ($) (as determined and calculated in Section 15 of this PJM Manual)
- For each Real-time Settlement Interval, PJM calculates a Secondary Reserve Lost Opportunity Cost Credit for a resource if the costs associated with that resource are greater than the credits received by the resource.
  - Secondary Reserve Lost Opportunity Cost Credit = Max (Secondary Reserve Cost – Secondary Reserve Credit, 0)
- PJM calculates the cost side of the Secondary Reserve Lost Opportunity Cost Credit equation as follows:
  - Secondary Reserve Cost = (Day-ahead Secondary Reserve Opportunity Cost + Real-time Secondary Opportunity Cost) / 12
    - Day-ahead Secondary Reserve Opportunity Cost will equal (A * B) - C:

- A = DA LMP at the generation bus or applicable Economic Load Response Participant resource pricing point
- B = The deviation of the resource's energy output or load reduction necessary to supply a Day-ahead Secondary Reserve assignment from the resource's expected energy output or load reduction level if it had been assigned in economic merit order to provide energy or reduce load in the dispatch run less any Day-ahead Synchronized Reserve Market assignment
- C = The Day-ahead Energy Market offer integrated under the applicable energy offer curve for the resource's energy output or load reduction necessary to provide a Day-ahead Secondary Reserve Market assignment from the resource's expected energy output or load reduction level if it had been assigned in economic merit order to provide energy or reduce load in the dispatch run less any Day-ahead Synchronized Reserve Market assignment
- For the following resource types, the Day-ahead Secondary Reserve Opportunity Cost is calculated as follows:
- Resources committed to provide secondary reserves in synchronous condensing mode without a Day-ahead Synchronized Reserve Assignment = (Day-ahead Condense Energy Use * DA LMP at the generation bus) + (Day-ahead Condense Start-up Cost / Number of Hours assigned Secondary Reserve)
- Resources providing secondary reserves in synchronous condensing mode with a Day-ahead Synchronized Reserve Assignment = $0
- Resources committed to provide secondary reserves in offline mode = $0
- Economic Load Response Participant resources that do not have a day-ahead commitment to provide energy in the same hour = $0

▪ Real-time Secondary Reserve Opportunity Cost will equal (A * B) – C:

- A = RT LMP at the generation bus or applicable resource pricing point
- B = The deviation of the generation resource's output necessary to supply Secondary Reserve in real-time in excess of its Day-ahead Secondary Reserve Market assignment and follow the Office of the Interconnection's signals and instructions from the generation resource's expected output level if it had been dispatched in economic merit order to provide energy in the pricing run less any Real-time Synchronized Reserve Market assignment
- C = The energy offer integrated under the applicable energy offer curve for the generation resource's output necessary to supply Secondary Reserve in real-time from the lesser of the generation resource's output necessary to provide a Day-ahead Secondary Reserve Market assignment or follow the

Office of the Interconnection's signals and instructions from the generation resource's expected output level if it had been dispatched in economic merit order to provide energy in the pricing run less any Real-time Synchronized Reserve Market assignment

- For the following resource types, the Real-time Secondary Reserve Opportunity Cost is calculated as follows:
- Resources providing secondary reserves in synchronous condensing mode without a Real-time Synchronized Reserve assignment = ((Real-time Condense Energy Use – Day-ahead Condense Energy Use) * RT LMP at the generation bus) + any additional Condense Start-up Cost in excess of Day-ahead Condense Start-up Cost
- Resources providing secondary reserves in synchronous condensing mode with a Real-time Synchronized Reserve assignment = $0
- Resources with a Real-time Secondary Reserve assignment that were cleared and committed as offline resources = $0
- Hydro unit (providing secondary reserve in spill mode) = (RT LMP at the generation bus * (Real-time Secondary Reserve assignment – Day-ahead Secondary Reserve assignment)
- Hydro unit (non-spill mode with day-ahead energy commitment > 0) = (RT LMP at the generation bus - average RT LMP at the generation bus for the appropriate on peak / off peak period) * (Real-time Secondary Reserve assignment – Day-ahead Secondary Reserve assignment). If the average RT LMP value is higher than the RT LMP at the generator bus, then the Real-time Synchronized Reserve Opportunity Cost will equal zero.
- Where the "on peak" is defined as 0700 – 2259 and "off-peak" is defined as 0000 – 0659, 2300-2359, excluding those hours during which all available units at the hydro plant were operating
- Hydro unit (non-spill mode with no day-ahead energy commitment > 0) = $0
- Economic Load Response Participant resources = $0

- PJM calculates the credit side of the Secondary Reserve Lost Opportunity Cost Credit equation as follows:
  - Secondary Reserve Credit = (Day-ahead Secondary Reserve Market Clearing Price Credit / 12) + (Market Revenue Neutrality Offset + Secondary Reserve Opportunity Cost Credit Owed + Balancing Secondary Reserve Market Clearing Price Credit)
    - Day-ahead Secondary Reserve Market Clearing Price Credit = as determined and calculated in Section 19.2.1 of the PJM Manual
    - Market Revenue Neutrality Offset = as determined and calculated in Section 15 of this PJM Manual
    - Secondary Reserve Opportunity Cost Credit Owed = as determined and calculated in Section 15 of this PJM Manual

- Balancing Secondary Reserve Market Clearing Price Credit = as determined and calculated in Section 19.2.2 of the PJM Manual

19.3 Charges for Secondary Reserve

PJM allocates the cost of the total Day-ahead and Balancing Secondary Reserve credits paid to resources providing Secondary Reserve as charges to Market Participants with a Secondary Reserve Obligation in the RTO zone, active sub-zone or non sub-zone as described in section 6.1 of this PJM Manual. PJM calculates charges for the RTO Reserve Zone when there is no price separation between the RTO Reserve Zone and the active sub-zone, and calculates charges for the active sub-zone and non sub-zone portions of the RTO, rather than for the RTO Reserve Zone, when there is price separation.

Each Market Participant that is a Load Serving Entity (LSE) or secondary buyer that is not part of an agreement to share reserves with external entities subject to the requirements in NERC Reliability Standard BAL-002 incurs a Secondary Reserve Obligation based on their Load Ratio Share and applicable reserve zone's or reserve sub-zone's assignments during that hour. A Load Serving Entity (LSE) whose reserve obligations are satisfied through an agreement to share reserves with external entities subject to the requirements in NERC Reliability Standard BAL-002 does not have a Secondary Reserve Obligation.

PJM separately allocates the charges associated with Secondary Reserve Market Clearing Price Credits less any Secondary Reserve Shortfall Charges and Secondary Reserve Lost Opportunity Cost Credits and includes them on the billing statement as one billing line item:

- Secondary Reserve Charge = Secondary Reserve Market Clearing Price Charge + Secondary Reserve Lost Opportunity Cost Charge

19.3.1 Secondary Reserve Market Clearing Price Charge

PJM Actions

- PJM retrieves the following information for the Secondary Reserve Market Clearing Price Charge
  - Market Participant's Load Ratio Share
  - Bilateral Secondary Reserve transactions (sales and purchases) (MW)
  - Total PJM Day-ahead and Real-time Secondary Reserve assigned (MW)
  - Day-ahead Secondary Reserve Market Clearing Price Credits ($)
  - Balancing Secondary Reserve Market Clearing Price Credits ($)
- PJM calculates for each hour the Secondary Reserve Market Clearing Price charges by RTO zone or active sub-zone and non sub-zone in which the load is located by multiplying the Total Secondary Reserve Market Clearing Price Credits in that location times the Market Participant's Secondary Reserve Obligation Share in that location.

  - Secondary Reserve Market Clearing Price Charges = Total Secondary Reserve Market Clearing Price Credits * Secondary Reserve Obligation Share
- PJM calculates for each hour the Total Secondary Reserve Market Clearing Price Credits in the applicable location.
  - Total Secondary Reserve Market Clearing Price Credits = Day-ahead Secondary Reserve Market Clearing Price Credits + Balancing Secondary Reserve Market Clearing Price Credits
- PJM calculates each Market Participant's hourly Secondary Reserve Obligation Share by RTO zone or active sub-zone and non sub-zone based on their Load Ratio Share in that location, adjusted by bilateral Secondary Reserve sales and purchases.
  - Secondary Reserve Obligation Share = ((Load Ratio Share * Total PJM Real-time Secondary Reserve assigned) – Secondary Reserve MW Purchased + Secondary Reserve MW Sold) / Total PJM Real-time Secondary Reserve assigned
  - If the Total PJM Real-time Secondary Reserve assigned in an hour is zero, the Total PJM Day-ahead Secondary Reserve assigned is used to determine the Secondary Reserve Obligation Share.

19.3.2 Secondary Reserve Lost Opportunity Cost Charge

PJM Actions

- PJM retrieves the following information for Secondary Reserve Lost Opportunity Cost Charge:
  - Market Participant's Load Ratio Share
  - Bilateral Secondary Reserve transactions (sales and purchases) (MW)
  - Total PJM Real-time Secondary Reserve assigned (MW)
  - Total PJM Secondary Lost Opportunity Cost Credits
- PJM calculates each Market Participant's hourly Secondary Reserve Lost Opportunity Cost Charges by RTO zone or active sub-zone and non sub-zone by multiplying the Total PJM Secondary Lost Opportunity Cost Credits in that location times the Secondary Reserve Purchases ratio share in that location.
  - Secondary Reserve Lost Opportunity Cost Charge = Total PJM Secondary Lost Opportunity Cost Credits * Secondary Reserve Purchases ratio share
- PJM calculates each Market Participant's hourly Secondary Reserve Purchases by RTO zone or active sub-zone and non sub-zone based on their Load Ratio Share in that location, adjusted by bilateral Secondary Reserve sales and purchases.
  - Secondary Reserve Purchases = ((Load Ratio Share * Total PJM Real-time Secondary Reserve assigned) – Secondary Reserve MW Purchased + Secondary Reserve MW Sold) / Total PJM Real-time Secondary Reserve assigned

- If the Total PJM Real-time Secondary Reserve assigned in an hour is zero, the Total PJM Day-ahead Secondary Reserve assigned is used to determine the Secondary Reserve Purchases Share.

19.4 Reconciliation for Secondary Reserve Charges

PJM will calculate reconciled Secondary Reserve charges for EDCs and Retail Load Aggregators (a.k.a. Electric Generation Suppliers) for past monthly billings on a two month lag that were based on Load Ratio Shares. The reconciliation kWh data must be supplied to PJM by the EDCs no later than the last day of the billing month that is two months after the original billing month. For example, all reconciliation data for January must be submitted by March 31 at 23:59. The reconciliation kWh data represents the difference between the scheduled Retail Load Responsibility or Wholesale Load Responsibility InSchedule and the “actual” usage based on metered data. This hourly kWh data must be reported separately for each applicable InSchedule contract.

PJM calculates the Secondary Reserve charge reconciliations by multiplying the kWh data (de-rated for transmission losses) by the Secondary Reserve billing determinant for that hour. The hourly Secondary Reserve charge billing determinant (in $/MWh) for each location (Reserve Zone or active sub-zone and non sub-zone) is calculated by dividing the total hourly Secondary Reserve charges in that location by the total PJM real-time load (de-rated for transmission losses) in that location for that hour. These charge reconciliations are then totaled for the month for each EDC or Retail Load Aggregator. Note that the reconciliation for Secondary Reserve charges for a month may be either a positive or a negative value, and may even be such that the reconciled load responsibility MWh results in a negative load quantity.

Section 20: Billing

Welcome to the Billing section of the ***PJM Manual for Operating Agreement Accounting***. In this section, you will find the following information:

- A summary of the billing process for the PJM Operating Agreement Accounting (see "Billing Process Overview").

20.1 Billing Process Overview

A single billing statement is issued by PJM monthly to each PJM Market Participant account, detailing all charges and credits for the month that applies to that customer under the PJM Operating Agreement and the PJM Open Access Transmission Tariff. The billing statement presents a net amount due from the Market Participant or due to the Market Participant. Weekly billing statements are also issued for certain line items, as described in PJM Manual 29: Billing.

The Operating Agreement related billing statement line items that are described in this PJM Manual are as follows:

- Day-ahead and Balancing Spot Market Energy (charges)
- Synchronized Reserve (charges/credits)
- Non-Synchronized Reserve (charges/credits)
- Secondary Reserve (charges/credits)
- Regulation (charges/credits)
- Transmission Congestion (day-ahead and balancing charges/credits)
- Transmission Losses (day-ahead and balancing charges/credits)
- Day-ahead and Balancing Operating Reserve (charges/credits)
- Synchronous Condensing (charges/credits)
- Reactive Services (charges/credits)
- Emergency Energy (charges/credits)
- Meter Correction (charges)
- Inadvertent Interchange (charges)
- RPM-related (charges/credits)
- Financial Transmission Rights Auction (charges/credits)
- Auction Revenue Rights (credits)
- Reconciliation for Spot Market Energy (charges)
- Reconciliation for Transmission Congestion (charges/credits)
- Reconciliation for Transmission Losses (charges/credits)

- Reconciliation for Regulation (charges)
- Reconciliation for Synchronized Reserve (charges)
- Reconciliation for Non-Synchronized Reserve (charges)
- Reconciliation for Secondary Reserve (charges)
- Reconciliation for Inadvertent Interchange (charges)

Section 21: Pseudo Tie Settlements

Welcome to the Pseudo Tie Settlements section of the ***PJM Manual for Operating Agreement Accounting***. In this section, you will find the following information:

- An overview of Pseudo Tie Market Participants importing in and exporting out of PJM (see "Pseudo Tie Market Participant Overview").
- An overview of the Real-time Pseudo Tie Balancing Congestion Refund Charge (see "Real Time Pseudo Tie Balancing Congestion Refund Charge").
- An overview of the Day-ahead Pseudo Tie Transaction (see "Day-ahead Pseudo Tie Transaction").

21.1 Pseudo Tie Market Participants Overview

Generation resources that implement interchange via a Pseudo Tie between the Native Balancing Authority and Attaining Balancing Authority are now able to offer into both the Attaining and Native Balancing Authority's energy market.

Pseudo Tie Generator Imports into PJM are modeled as regular units in the PJM Energy Market, and as such follow the same bidding rules as units which are electrically inside PJM and participating in the PJM Energy Market. Pseudo Tie Generator Exports out of PJM are charged the Explicit Congestion and Loss LMP difference between their source generator and sink external PJM interface point. The real-time MW value used is the value as reported to PJM via Power Meter.

A new product is available for Pseudo Tie exporting Market Participants to hedge their Explicit Congestion and Loss charges in the PJM Balancing Authority's Day-ahead Energy Market. Pseudo Tie exporting Market Participants will be charged Balancing Explicit Congestion and Losses for deviations between day-ahead and real-time MW values at RT LMP.

21.2 Real-time Pseudo Tie Balancing Congestion Refund Charge

Pseudo Tie Generator Imports into PJM are eligible for the Pseudo Tie Balancing Congestion Refund Charge.

PJM Actions

- PJM retrieves the following information:
  - Pseudo Tie real-time congestion overlap refund price ($/MWh)
  - PJM interface points with adjacent control areas

- Five minute deviation MW values from Super Regional Congestion Management (MW)

The below equation represents the refund charge associated with the deviations between the scheduled MW in day-ahead and the actual MW in the real-time market for Pseudo Tie Generator imports for each five minute interval.

$$Real - time\ Pseudo\ Tie\ Balancing\ Congestion\ Refund\ Charge = \left(RT\ CORP_{PT} * DevMW_{PT}\right) / 12$$

PJM sums the Real-time Pseudo Tie Balancing Congestion Refund Charge to determine the total hourly charge for each PJM Member.

The hourly Real-time Pseudo Tie Balancing Congestion Refund Charge will be added to the hourly Total PJM Balancing Transmission Congestion Charges.

21.3 Day-ahead Pseudo Tie Transaction

Pseudo Tie Generator Exports out of PJM are eligible to hedge against their Explicit Balancing Congestion & Losses for deviations between day-ahead and real-time MW values at real-time LMP within their Native Balancing Authority. A new optional product, Day-ahead Pseudo Tie Transaction, has been created for Market Participants to bid into the Day-ahead Energy Market via Markets Gateway. Details regarding the Day-ahead Pseudo Tie Transaction can be found in PJM Manual 11: Energy & Ancillary Services Market Operations, Section 2.3.4A.

Section 22: Open-Loop Hybrid & Energy Storage Resource Charging Energy

Welcome to the Open-Loop Hybrid & Energy Storage Resource Charging Energy section of the PJM Manual for Operating Agreement Accounting. In this section, you will find the following information:

- A description of the accounting procedures for Open-Loop Hybrid or Energy Storage Resource Charging Energy.

22.1 Overview of Charging Energy

An Energy Storage Resource or Open-Loop Hybrid Resource is a resource capable of receiving electric energy from the grid and storing it for later injection to the grid that participates in the PJM Energy, Capacity and/or Ancillary Services markets as a Market Participant. Examples of Energy Storage Resource technologies include but are not limited to pumped storage hydroelectric plants, batteries, and flywheels. A hybrid resource is composed of more than one component, whereby each component is a separate generation component and/or storage component behind the same Point of Interconnection operating as a single integrated resource; an Open-Loop Hybrid is a hybrid resource with a storage component that operates by charging its storage component from the grid.

Charging energy that is purchased for storing in an Energy Storage Resource or Open-Loop Hybrid Resource for later resale is always billed at the applicable Locational Marginal Price. However, different categories of charging energy accrue different sets of charges according to use. These categories are summarized as follows (formal definitions are in the PJM Tariff):

- “Direct Charging Energy” shall mean the energy that an Energy Storage Resource or Open-Loop Hybrid Resource purchases from the PJM Interchange Energy Market and (i) later resells to the PJM Interchange Energy Market; or (ii) is lost to conversion inefficiencies, provided that such inefficiencies are an unavoidable component of the conversion, storage, and discharge process that is used to resell energy back to the PJM Interchange Energy Market. Note that Direct Charging Energy is purchased by Energy Storage Resource Model Participants or Open-Loop Hybrid Resources and is divided into two subcategories:
    - “Dispatched Charging Energy” shall mean Direct Charging Energy that an Energy Storage Resource Model Participant or Open-Loop Hybrid Resource receives from the electric grid pursuant to PJM dispatch while providing a service in the PJM markets.
    - “Non-Dispatched Charging Energy” shall mean all Direct Charging Energy that an Energy Storage Resource Model Participant or Open-Loop Hybrid Resource receives from the electric grid that is not otherwise Dispatched Charging Energy. An example

of Non-Dispatched Charging Energy is charging energy at an ESR that is self-scheduled and not dispatchable.

- "Load Serving Charging Energy" shall mean energy that is purchased from the PJM Interchange Energy Market and stored in an Energy Storage Resource or Open-Loop Hybrid Resource for later resale to end-use load. Note that only Load Serving Entities may purchase Load Serving Charging Energy. Load Serving Charging Energy is comparable to ordinary load.

Non-Dispatched Charging Energy must pay applicable transmission charges as a Network Service User. By contrast, Dispatched Charging Energy does not pay such charges. Charging energy qualifies as Dispatched Charging Energy when the Energy Storage Resource or Open-Loop Hybrid Resource meets one of the following conditions:

- Provides Energy Imbalance Service under Schedule 4 of the PJM Tariff. Energy Storage Resource Model Participants or Open-Loop Hybrid Resources shall be considered to be providing Energy Imbalance Service when they are dispatchable by PJM in real time. An Energy Storage Resource or Open-Loop Hybrid Resource shall be considered dispatchable when the fixed generation flag is set to "no" and the dispatchable range exceeds 10% of the absolute value of the relevant economic limit and the resource follows PJM dispatch within 10% of the desired output.
- Assigned to Regulation, Synchronized Reserves, or Reactive Service;
- Being manually dispatched for reliability

22.2 Charges for Direct Charging Energy

Purchases of Direct Charging Energy and sales of energy from an Energy Storage Resource or Open-Loop Hybrid Resource are at the same pricing node.

Direct Charging Energy is purchased by an Energy Storage Resource or Open-Loop Hybrid Resource for later resale to PJM markets, is not purchased by a Load Serving Entity, is not end-use load, and is not Station Power. Direct Charging Energy is reported to PJM through Power Meter, similar to generation energy sales; Direct Charging Energy is not reported through InSchedule in the way that Load Serving Entity purchases of end-use load is reported. Direct Charging Energy shall not be included in a Load Serving Entity's Total Hourly Energy Obligation.

As described above, Direct Charging Energy purchases by Energy Storage Resource Model Participants or Open-Loop Hybrid Resources fall into two categories: Dispatched Charging Energy and Non-Dispatched Charging Energy. Dispatched Charging Energy does not pay transmission charges; however Non-Dispatched Charging Energy does pay transmission charges, and must arrange for Network Transmission Service. Non-Dispatched Charging Energy uses the transmission system, and an Energy Storage Resource Model Participant or Open-Loop Hybrid Resource purchasing Non-Dispatched Charging Energy is a Network Service User. As a result, certain Transmission Customer charges apply to Non-Dispatched Charging

Energy that do not apply to generation output. However, the PJM Tariff states that Direct Charging Energy (which includes Non-Dispatched Charging Energy) is exempt from other Transmission Customer charges. Further, because Direct Charging Energy (including Non-Dispatched Charging Energy) is not end-use load, charges that are applicable to Load Serving Entities and to end-use load are not applicable to Direct Charging Energy. Therefore, Non-Dispatched Charging Energy is eligible for allocation of the following non-LMP charges and credits:

- Schedule 1A Transmission Owner Scheduling, System Control and Dispatch Service
- Schedule 9-3, 9-FERC, 9-OPSI, 9-CAPS, 9-FINCON, 9-MMU, and 9-PJM Settlement
- Schedule 10-NERC and 10-RFC
- Network Integration Transmission Service
- Network Transmission Service Offset
- MTEP Project Cost Recovery
- Transmission Enhancement
- Other Supporting Facilities
- Non-Firm Point-to-Point Transmission Service
- Black Start Service
- Unscheduled Transmission Service
- Reactive Supply and Voltage Control from Generation and Other Sources Service

An Energy Storage Resource or Open-Loop Hybrid Resource shall be considered charging when the Revenue Data for Settlements for a Real Time Settlement Interval corresponds to a withdrawal. In cases where Station Power is reported to PJM for settlements purposes as described in Manual 28 Section 13, Market Participants must report data separately in Power Meter for Direct Charging Energy and Station Power consumption. The determination of Non-Dispatched Charging Energy vs. Dispatched Charging Energy shall be made for each Real Time Settlement Interval. Hourly Non-Dispatched Charging Energy is the sum of Revenue Data for Settlements for the Real Time Settlement Intervals which are determined to be Non-Dispatched Charging Energy over the hour divided by 12.

The PJM Tariff exempts Direct Charging Energy (which includes Non-Dispatched Charging Energy) from the following Transmission Customer charges:

- Schedule 9-1 Control Area Administration
- Allocations of Operating Reserve costs to scheduled day-ahead load and to real-time load pursuant to Tariff Attachment K Appendix Section 3.2.3 – Operating Reserves;
- Allocations of Reactive Service costs pursuant to Tariff Attachment K Appendix Section 3.2.3B – Reactive Services;
- Allocations of Synchronous Condensing costs pursuant to Tariff Attachment K Appendix Section 3.2.3C – Synchronous Condensing for Post-Contingency Operation;

- 500 kV Meter Errors
- Meter Correction Between Control Areas
- Inadvertent Interchange
- Allocation of Balancing Congestion Charges
- Distribution of Total Transmission Loss Charges
- Allocation of Auction Revenue Rights

The following non-LMP charges that apply to Load Serving Entities are not applicable to Direct Charging Energy (which includes Non-Dispatched Charging Energy):

- Synchronized, Non-Synchronized, and Secondary Reserves;
- Regulation;
- Capacity Market charges;
- Economic Demand Response charges in Day-ahead and Real-Time; and
- Emergency Demand Response charges.

FERC directed that Dispatched Charging Energy shall be exempt from paying transmission charges, and therefore charges that are applicable to Transmission Customer use of the transmission system are not applicable to Dispatched Charging Energy. Dispatched Charging Energy therefore pays the same non-LMP charges as generation output, namely:

- Schedule 9-3, 9-MMU, 9-PJM Settlements

22.3 Charges for Load Serving Charging Energy

Load Serving Charging Energy is PJM load that is purchased from PJM by a Load Serving Entity and stored in an Energy Storage Resource or Open-Loop Hybrid Resource for later end-use consumption. Load Serving Charging Energy is purchased at the aggregate nodal LMP that is applicable to the corresponding Load Serving Entity load. Load Serving Charging Energy is eligible for the same charges as ordinary load, including all Load Serving Entity charges, end-use load charges, and Transmission Customer charges.

22.4 Methods to Differentiate Direct Charging Energy from Load Serving Charging Energy at an Energy Storage Resource Site

The PJM Tariff and manuals shall not be construed as prohibiting an Energy Storage Resource or Open-Loop Hybrid Resource from providing energy directly to end use loads. Some such configurations are illustrated in Figure 1 below. In order to ensure adequate visibility for PJM and to properly quantify Direct Charging Energy as defined in the PJM Tariff, additional metering requirements apply to such resources. These meters are used in a variety of use cases to assist the Electric Distribution Company in distinguishing and quantifying Direct

Charging Energy and Load Serving Charging Energy. Note that Direct Charging Energy and Load Serving Charging Energy are mutually exclusive categories.

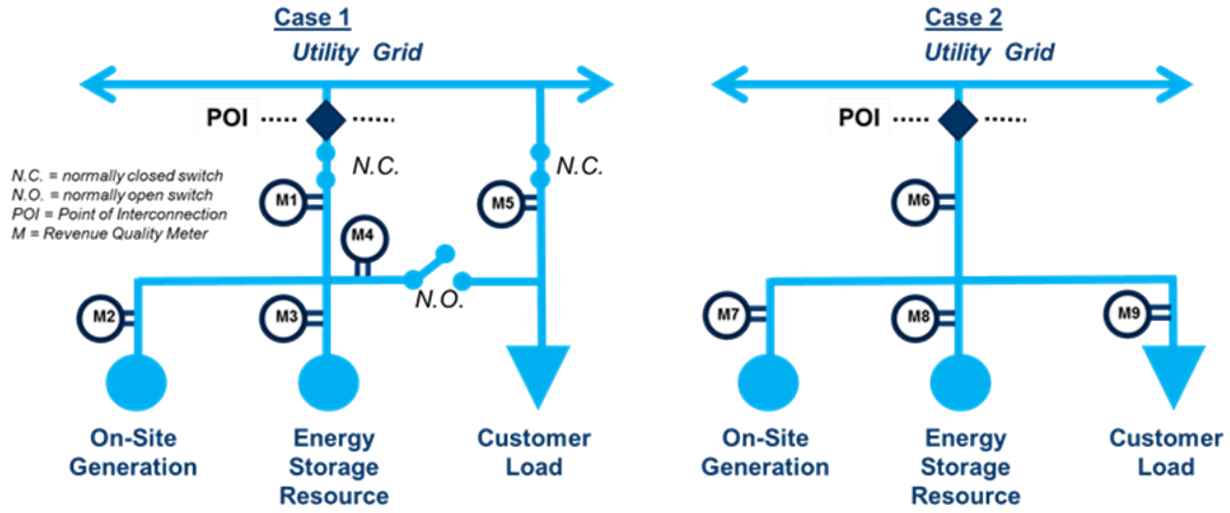

Figure 1

Case 1a: Standalone Energy Storage Resource (no on-site generation)

In any given month, all energy withdrawn from the grid from the Point Of Interconnection meter shown as “M1” in Figure 1 above is Direct Charging Energy, except that meter “M4” appropriately measures the quantity of monthly Load Serving Charging Energy. Load Serving Charging Energy is withdrawn from the grid, stored in the Energy Storage Resource, then provided to end use loads, and is therefore not Direct Charging Energy.

Case 1b: Open-Loop Hybrid or Standalone Energy Storage Resource plus Other On-Site Generation

In any given month, all energy withdrawn from the grid from the Point Of Interconnection meter shown as “M1” in Figure 1 above is Direct Charging Energy, except that any Load Serving Charging Energy that is withdrawn from the grid is not Direct Charging Energy. In this case, the Energy Storage Resource or storage component of the Open-Loop Hybrid Resource can charge from the grid or from the on-site generation. The quantity of the Energy Storage Resource or storage component of the Open-Loop Hybrid Resource inventory that is discharged to the end user that consists of energy originally withdrawn from the grid constitutes Load Serving Charging Energy. If the Electric Distribution Company determines that the Energy Storage Resource or storage component of the Open-Loop Hybrid Resource inventory that is discharged to the end user consists entirely of stored on-site generation, then no Load Serving Charging Energy was consumed by the end-use load. An appropriate method to make such a determination is to compare the monthly energy production from the on-site generation as measured at meter “M2” in above Figure 1 with the monthly quantity of energy provided to the

end-use customer through meter “M4”—if “M2” monthly quantity is greater than the “M4” monthly quantity, then no Load Serving Charging Energy was consumed.

Case 2a: Load Co-Located with Energy Storage Resource (no on-site generation)

PJM can accommodate Energy Storage Resources co-located with end-use load (as shown in Case 2 of Figure 1 above) using a “virtual buy all/sell all” approach. In such cases, the Energy Storage Resource transacts 100% of its energy at wholesale with PJM by relying on energy measured at meter “M8”.

Alternatively, PJM can accommodate Energy Storage Resources co-located with end-use load using a “net excess sale” approach. In this case, injections at meter “M6” are wholesale sales by the Energy Storage Resource, while withdrawals at “M6” are a mix of retail purchases by the host retail customer (with corresponding purchases by a Load Serving Entity from the PJM energy market) and purchases of Direct Charging Energy by the Energy Storage Resource. In any given month, all energy withdrawn from the grid from the Point Of Interconnection meter shown as “M6” in Figure 1 above is ordinary load (purchased by a Load Serving Entity) or is Load Serving Charging Energy, except for any Direct Charging Energy. Monthly energy injected onto the grid as measured at meter “M6” appropriately identifies the monthly quantity of Direct Charging Energy, together with any lost energy associated with the conversion and storage of grid energy for later injection onto the grid. The Energy Storage Resource may report such losses to PJM through PJM Power Meter, or the Electric Distribution Company may work directly with the Energy Storage Resource to quantify such losses. Direct Charging Energy is therefore the sum of monthly injections at meter “M6” plus associated losses.

PJM shall not bill an Energy Storage Resource for purchases of Direct Charging Energy if the host distribution utility is unable or unwilling to net out the Direct Charging Energy quantity from the host customer’s retail bill.

Case 2b: Load Co-Located with Open-Loop Hybrid or Energy Storage Resource plus Other On-Site Generation

PJM can accommodate Energy Storage Resources or Open-Loop Hybrid Resources co-located with an on-site generator and also with end-use load (as shown in Case 2 of Figure 1 above) using a “virtual buy all/sell all” approach. In such cases, the Energy Storage Resource or Open-Loop Hybrid Resource and the on-site generator transact 100% of energy at wholesale with PJM by relying on energy measured at meter “M7” and “M8”.

Alternatively, PJM can accommodate Energy Storage Resources or Open-Loop Hybrid Resources co-located with end-use load and with an on-site generator by using a “net excess sale” approach. In this case, injections at meter “M6” are wholesale sales by the Open-Loop Hybrid Resources or Energy Storage Resource and/or on site generator, while withdrawals at “M6” are a mix of retail purchases by the host retail customer (with corresponding purchases by a Load Serving Entity from the PJM energy market) and purchases of Direct Charging Energy by the Energy Storage Resource or storage component of the Open-Loop Hybrid Resource. In

any given month, all energy withdrawn from the grid from the Point Of Interconnection meter shown as “M6” in Figure 1 above is Load Serving Charging Energy or end-use load, except for Direct Charging Energy. The Electric Distribution Company is responsible for calculating monthly Direct Charging Energy.

PJM shall not bill an Energy Storage Resource or Open-Loop Hybrid Resource for purchases of Direct Charging Energy if the host distribution utility is unable or unwilling to net out the Direct Charging Energy quantity from the host customer’s retail bill.

22.5 Reconciling Monthly Direct Charging Energy and Load Serving Charging Energy

Direct Charging Energy is not end-use load, is reported through Power Meter like generation sales, is settled at a nodal LMP, and pays fewer non-LMP charges than load. By contrast, Load Serving Charging energy is end-use load, is reported through InSchedule like all other load, and pays all the same non-LMP charges as any other load. PJM provides Electric Distribution Companies with a monthly quantification and reconciliation approach for the distinct settlements of Direct Charging Energy and Load Serving Charging Energy at Energy Storage Resources or Open-Loop Hybrid Resources that are capable of directly serving end-use load and that are therefore capable of withdrawing and storing both Direct Charging Energy and Load Serving Charging Energy in a given month.

Case 1

Settlements of standalone Energy Storage Resources or Open-Loop Hybrid Resources that are not connected to load during normal operations (i.e., Case 1 in Figure 1 above) follow these steps:

1. Initial settlements are 100% Direct Charging Energy, reported through Power Meter.
2. Monthly Load Serving Charging Energy is quantified after the end of the month according to the methods above.
3. The Electric Distribution Company initiates a PJM Energy Storage Resource Meter Correction process to reduce the MWh purchases of Direct Charging Energy by the Energy Storage Resource or Open-Loop Hybrid Resources in the quantity that was in fact Load Serving Charging Energy as identified in step 2 above.
4. The Electric Distribution Company initiates a PJM Load Reconciliation process to increase the MWh purchase of Load Serving Charging Energy by the applicable Load Serving Entity in the amount identified in Step 2 above.

Case 2

For sites with Energy Storage Resources or Open-Loop Hybrid Resources that are co-located with load during normal operations, purchases of Load Serving Charging Energy should in general apply to the same Load Serving Entity that serves the ordinary host customer load.

Settlement of Energy Storage Resources or Open-Loop Hybrid Resources that are co-located with load during normal operations (i.e., Case 2 in Figure 1 above) follow these steps:

1. Initial settlements are 100% Load Serving Charging Energy or ordinary Load Serving Entity load purchases.
2. Monthly Direct Charging Energy is quantified after the end of the month according to the methods above.
3. The Electric Distribution Company initiates a PJM Energy Storage Resource Meter Correction process to increase the MWh purchases of Direct Charging Energy by the Energy Storage Resource or Open-Loop Hybrid Resource in the quantity that was in fact Direct Charging Energy as identified in step 2 above.
4. The Electric Distribution Company initiates a PJM Load Reconciliation process to reduce the MWh purchase of Load Serving Charging Energy by the applicable Load Serving Entity in the amount identified in Step 2 above.

The Energy Storage Resource Meter Correction Process to Adjust Direct Charging Energy

The Energy Storage Resource Meter Correction Process is similar to the Meter Error Correction process and applies to Energy Storage Resources and Open-Loop Hybrid Resources. The purpose is to provide an ex-post credit or a charge to an Energy Storage Resource or Open-Loop Hybrid Resource in an amount corresponding to a greater or lesser proportion of monthly Direct Charging Energy withdrawn than used in the initial settlement. In order to preserve 5-minute Locational Marginal Pricing, the process uses a monthly average price that is weighted according to actual per-interval charging quantities. The inputs to the Energy Storage Resource Meter Correction Process are the per-interval quantities of energy withdrawn from the grid and stored, as well as the monthly quantity of energy to be adjusted up or down. The result is a charge or credit to the Energy Storage Resource or Open-Loop Hybrid Resource, with an equal but opposite charge or credit to the Electric Distribution Company. The charge or credit is calculated according to this formula:

$$Rate = \sum_{interval\ i = 0}^{i = end\ of\ month} LMP_i \times \frac{StoredMWh_i}{MonthlyStoredMWh}$$

For sites that are co-located with load during normal operations (Case 2 in Figure 1 above), the per-interval quantity of energy that is stored from the grid is calculated for each interval MIN[M8_INBOUND, M6_INBOUND]. Such resources must provide both M6 and M8 to PJM through Power Meter.

Use of the Load Reconciliation Process to Adjust for Load Serving Charging Energy

The Electric Distribution Company should use the ordinary Load Reconciliation Process to Adjust for Load Serving Charging Energy for the applicable Load Serving Entity. PJM can accommodate a separate InSchedule contract specifically for the Load Serving Charging Energy at a given customer or group of customers.

Section 23: Fuel Cost Policy Penalty Settlements

Welcome to the Fuel Cost Policy Penalty Settlements section of the PJM Manual for Operating Agreement Accounting. In this section, you will find the following information:

- A description of the accounting procedures for non-compliance with an approved Fuel Cost Policy.

23.1 Fuel Cost Policy Penalty Overview

A Fuel Cost Policy penalty is assessed if PJM determines and the Market Monitoring Unit (MMU) agrees or if the MMU determines and PJM agrees that a Market Seller's cost-based offer is not compliant with the PJM-approved Fuel Cost Policy, temporary cost offer methodology, or other applicable cost-based offer guidelines in Schedule 2 of the Operating Agreement.

Market Participants are notified regarding non-compliance, after which the Fuel Cost Policy penalty is assessed. The Fuel Cost Policy penalty is an hourly charge that applies to all applicable hours of the day across the non-compliant period. All Fuel Cost Policy Penalty charges collected are allocated to Market Participants as Fuel Cost Policy Penalty credits based on real-time load ratio shares as determined in Section 3.10 of this manual.

23.2 Fuel Cost Policy Penalty Charge

Market Sellers that submit cost-based offers that are not in accordance with the PJM-approved Fuel Cost policy or other applicable cost-based offer guidelines in Schedule 2 of the Operating Agreement are assessed Fuel Cost Policy Penalty Charges.

PJM Actions

PJM retrieves the following information:

- Unit Name
- Fuel Cost Policy non-compliant period
- Real-time hourly average LMP at the applicable location of the resource ($/MWh) for the non-compliant period
- Average hourly capacity of the resource for the non-compliant period, where available capacity is defined as the greater of the real-time MWh output and real-time emergency maximum
- Market Seller error identification factor
- Market impact factor over the duration of the non-compliant cost-based offer

The below equation represents the Non-Escalating Fuel Cost Policy Penalty charge if the Market Seller ceased submitting the non-compliant offer either prior to, or upon notification from PJM, or the Market Seller reports such error to PJM after ceasing submission of the non-compliant cost-based offer. The penalty calculation uses the average hourly available capacity and real-time LMP for each hour of the day across the non-compliant period. The non-compliant period is defined as the first hour of the Operating Day for which the non-compliant offer was first submitted through the earlier of: a) the last hour of the Operating Day for which the non-compliant offer was submitted (inclusive of all hours, even where the offer was compliant, in between the same non-compliant offer) or b) notification of the non-compliant offer from PJM (inclusive of all hours, even where the offer was compliant, in between the same non-compliant offer).

$$Non - Escalating\ Penalty\ Charge = \sum_{h=1}^{24} \left\{ \left(\frac{1}{20}\right) \times LMP_h \times MW_h \times E \times I \right\}$$

where:

- h is the applicable hour of the Operating Day.
- LMP_h is the average hourly real-time LMP at the applicable location of the resource for the given hour across the non-compliant period.
- MW_h is the average hourly available capacity of the resource for the given hour across the non-compliant period, where available capacity is defined as the greater of the real-time megawatt output and emergency maximum of the generation resource.
- E is the Market Seller error identification factor (self-report factor). The Market Seller error identification factor equals 0.25 when the non-compliant offer is identified by the Market Seller without inquiry from or being prompted by PJM or the Market Monitoring Unit, and PJM, with timely input and advice from the Market Monitoring Unit, agrees that the Market Seller first identified the error. The Market Seller error identification equals 1 in the absence of a valid self-identified error.
- I is the market impact factor over the duration of the non-compliant cost-based offer. The market impact factor equals 1 if the Market Seller continued submitting non-compliant offers after receiving notice from PJM of its non-compliant offer, or if the Market Seller continued submitting non-compliant offers after notifying PJM of the non-compliant cost-based offer, or when any of the following conditions exist for any hour throughout the duration of the non-compliant cost-based offer:
    1. The generation resource clears in the Day-ahead Energy Market on the non-compliant cost-based offer, or runs in Real-time Energy Market on the non-compliant cost-based offer and is either:
        a. paid day-ahead or balancing operating reserves as described in Operating Agreement, Schedule 1, Section 3.2.3; or
        b. The marginal resource for energy, transmission constraint control, regulation or reserves.

2. The Market Seller does not pass the three pivotal supplier test as described in Operating Agreement, Schedule 1, Section 6.4.1(e) and any of the following conditions apply:
   a. The generation resource is not committed
   b. The generation resource runs on its cost-based offer
   c. The generation resource is running on its market-based offer and it did not pass the three pivotal supplier test at the time of commitment
3. The non-compliant incremental cost-based offer is greater then $1,000 MWh

If none of the above conditions apply, the market impact factor equals 0.1.

In addition to the Non-Escalating Fuel Cost Policy Penalty charge, a Market Seller is also subject to a daily Escalating Fuel Cost Policy Penalty charge for each day beyond which the Market Seller continues submitting the non-compliant cost-based offer after notification from PJM, or after the Market Seller reports such error to PJM. Daily Escalating Fuel Cost Policy Penalty charges are calculated as shown in the equation below:

$$Escalating \quad Daily \quad Penalty \quad Charge \quad = \quad \sum_{h=1}^{24} \left(\left(\frac{d}{20} \right) \times LMP_h \times MW_h \right)$$

where:

- d is the number of days, starting at two and increasing by one for each additional day of non-compliance following notification, and capped at a value of 15.
- h is the applicable hour of the Operating Day.
- LMP_h is the hourly real-time LMP at the applicable pricing location for the resource for the applicable hour of the Operating Day.
- MW_h is the hourly available capacity of the resource for the applicable hour of the Operating Day, where available capacity is defined as the greater of the real-time megawatt output and emergency maximum of the generation resource.

Market Sellers assessed a penalty for a cost-based offer not in compliance with the PJM-approved Fuel Cost Policy, the temporary cost offer methodology, or Schedule 2 of the Operating Agreement are assessed penalties until the day after PJM determines that the Market Seller's cost-based offers are in compliance with the Market Seller's approved Fuel Cost Policy or in compliance with Schedule 2 of the Operating Agreement. Fuel Cost Policy penalties are assessed for no less than one (1) Operating Day.

23.3 Fuel Cost Policy Penalty Credit

All Fuel Cost Policy Penalty charges collected are allocated as credits to Market Participants based on each Market Participant's real-time Load Ratio Share for each applicable hour.

PJM Actions:

- PJM retrieves the following information:
  - Total Fuel Cost Policy Penalty Charges
  - Market Participant's load ratio share as determined in Section 3.10 of this manual
- PJM calculates each Market Participant's hourly Fuel Cost Policy Penalty credit by multiplying the Fuel Cost Policy Penalty charges times the Market Participant's load ratio share.
- Fuel Cost Policy Penalty credit = Total Fuel Cost Policy Penalty charges * load ratio share

Revision History

Revision 104 (03/01/2026)

- Section 19.2.3 updated to specify Real-time Secondary Reserve opportunity cost is $0 for resources that were committed and cleared as off-line resources.

Revision 103 (1/22/2026)

- Cover to Cover Periodic Review:
  - Corrected Grammar, Punctuation in sections 4.3.1, 4.3.2, 5.3.2.2. 6.2.3, 6.3.1, 6.3.2, 7.2.1, 7.2.2, 7.3.1, 7.3.2, 15.2, 19.2.1, 19.3.1, 19.3.2
  - 4.2.2.1 added clarification for hydro units intra-commitment opportunity cost calculations to be in line with Tariff
  - 5.2.1 – added clarification to percent off dispatch calculation, added missing details of which startup intervals are included in the Balancing Operating Reserve segments for soak and non-soak units, added clarity to the impact of how make whole is adjusted in cases where units operate outside of their approved unit-specific parameters.
  - 5.2.6 – added reference that instructs participants who feel their lost opportunity cost calculation does not accurately compensate to follow the processes outlined in the Tariff, Attachment K-Appendix, Section 3.2.3 (f-3) and (f-5)
  - 5.2.6.1, 5.2.6.2, 5.2.6.3, 5.2.6.8 – added clarification that LOC Paid cannot be less than $0.00 5.2.6.8 - added reference that instructs participants who feel their Reactive Service lost opportunity cost calculation for does not accurately compensate to follow the processes outlined in the Tariff, Attachment K-Appendix, Section 3.2.3B (h).
  - 5.2.6.5 – added section for Run of River Hydro Resource Energy LOC section to be in line with Tariff 5.3.2.2 – added clarification to which regions (RTO vs RTO, East or West) are subject to Balancing Operating Reserve Deviation charges
  - 5.3.1 - added clarification that day-ahead Load Response bids are considered in the allocation of the day-ahead Operating Reserve charges
  - 5.3.2.4 – added clarification to Deviation calculations for Withdrawals to be in line with Tariff
  - 5.3.2.5 – added clarification to Deviation calculations for Injections to be in line with Tariff
  - 6.2.2 – added calculation of Capped Real-time Synchronized Reserve Assignment term
  - 6.3.2 – corrected retroactive penalty charge allocation methodology to be in line with Tariff

- 11.2.1 – added clarification to real-time dispatch reduction term used in the allocation of Emergency and Pre-Emergency Load Response Program charges
- 11.2.2 - added clarifications regarding the allocation of the credits resulting from Economic Load Response balancing Operating Reserve deviation charges
- 15.2 – added clarifications Market Neutrality Offset calculation to reference steps described in other paragraphs.
- 19.2.1 – added clarification that Secondary Reserve Shortfall MW is calculated for units that fail to come online when instructed by PJM

Revision 102 (10/01/2025):

- Regulation Market Redesign Phase 1 conforming changes (ER24-1772)
  - M28: Section 4.1, Section 4.2, Section 4.3
  - Updated capitalization and terminology for consistency with Manual 11
  - Mileage Clearing Price (RMMCP) terminology replaces Performance Clearing Price (RMPCP) terminology. This terminology change also applies to the associated credits and charges.
  - The calculation for the Regulation Mileage Credit (currently Performance Credit) updated to use a mileage ratio that is equal to [5-minute actual requested mileage/ Historic requested mileage] for the Regulation control signal
  - Removal of Reg A and Reg D signals calculations and benefits factor
  - Updates to the intra-commitment opportunity costs and shoulder opportunity cost sections to reflect the change from hour clearing and commitment to 30-minute clearing and commitment.
  - Updated shoulder interval opportunity cost calculations and descriptions
    - Eligibility and calculations are performed for two five-minute ramp-in intervals before the resource regulation commitment and two five-minute ramp-out intervals following the resource Regulation commitment (prior to the change the calculation was for three ramp-in intervals and three ramp-out intervals).
    - Clarified list of resource types that are not eligible for shoulder interval opportunity costs.
    - Replaced LMP Desired with Tracking Ramp-Limited Desired
    - Replaced energy offer with final offer
    - Updated shoulder interval opportunity cost calculation descriptions and added illustrative examples

Revision 100 (06/01/2025):

- Conforming changes to Sections 5.2 and 5.2.1 to support Capacity Resource Operational Test rules (ER24-99).

Revision 99 (05/21/2025):

- Market Suspension conforming changes (FERC Docket ER23-1431)

Revision 98 (12/17/2024):

- Section 6.1, 6.2.2, and 6.3.3 revisions to support deploying less than 100% of reserves during a Synchronized Reserve event (Reserve Certainty Senior Task Force

Revision 97 (12/01/2024):

- Conforming changes to support Hybrids Phase II and Solar Resources Lost Opportunity Cost calculations (ER23-2484)
  - Section 5.2.6.4: Update section to include Hybrid, Solar, and Energy Storage Resource Model Participants

Revision 96 (09/01/2024)

- Conforming changes for Synchronous Condensing Cost definitions (ER24-2203) effective 08/06/2024
  - Section 5.2.1: Added clarifying language for Synchronous Condensing Cost definitions
  - Section 5.2.3: Added clarifying language for Synchronous Condensing Cost definitions
  - Section 5.2.8: Added clarifying language for Synchronous Condensing Cost definitions
  - Section 6.2.3: Added clarifying language for Synchronous Condensing Cost definitions
  - Section 19.2.3: Added clarifying language for Synchronous Condensing Cost definitions

Revision 95 (12/14/2023)

- Conforming changes to support hourly Day-Ahead Zonal Factors (ER23-1529-000)
  - Section 3.7: Update factor granularity to hourly.

Revision 94 (11/15/2023):

- Conforming changes to support the Market Participation for Hybrid Resources and other Mixed Technology Facilities ("Hybrids-Phase II") FERC Order (ER23-2484-000).
  - Section 22.1: Update to hybrid resource and open-loop hybrid definitions.

Revision 93 (09/21/2023):

- Section 4 (Regulation Accounting): Conforming changes to Section 4.2.1 associated with FERC order EL21-83-000 (Undefined RegA Mileage Ratio), Effective 4/4/2023

- Periodic Review:
  - Grammar, punctuation, typos, syntax consistency, reference updates, addition of clarifying words and phrases, removal of terminated business rules, and deletion of duplicate material throughout manual
  - Section 3 (Spot Market Energy Accounting): Updated for consistent use of fully metered EDC, day-ahead, and balancing terminology
  - Section 5 (Operating Reserve Accounting):
    - Replaced UDS basepoint MW with dispatch signal MW
    - Replaced UDS LMP desired MW with dispatch lmp desired MW
    - Corrected Balancing Operating Reserve Target calculation for consistency with PJM OATT
    - Included nuclear unit eligibility description in Section 5.2.1
    - Updated submittal process for condense to generation costs - submitted via Markets Gateway, not manually submitted
    - Reformatted balancing energy market value for easier understanding
    - Removed references to Demand Resources since the calculations are covered in Section 11.
    - Added references to Secondary Reserves
    - Added up-to congestion transactions to Day-Ahead Operating Reserves charge denominator
    - Added Section 5.3.2.3A, Calculation of Ramp Limited Desired MW consistent with Manual 11.
    - Reworded Section 5.3.5 Reactive Services
  - Section 6 (Synchronized Reserve Accounting): Clarifications to shortfall MW and charge calculations
  - Sections 6, 7, and 19 (Synchronized Reserve, Non-Synchronized Reserve, and Secondary Reserve Accounting): Added obligation calculation details if real-time assignments are zero.
  - Section 8 and 9 (Transmission Congestion & Transmission Losses Accounting): Added explicit charge details for up-to congestion transactions.
  - Section 9.4 (Transmission Loss Credits): Replaced specific non-firm export reduction factor percentage with calculation description for consistency with PJM OATT
  - Section 11 (PJM Load Response Programs Accounting): Replaced description of LM testing allocation ratio with formula
  - Sections 12 (Metering Reconciliation Accounting) and 18 (Inadvertent Interchange Accounting): Clarification of business rules for Direct Charging Energy for consistency with PJM OATT

- Section 14 (Unscheduled Transmission Service (Loop Flow) Accounting): Clarified description for consistency with PJM OATT description
- Section 15 (Market Revenue Neutrality Offset Accounting): Corrected cost component of LOC Credit Due to Reduction for Non-Synchronized Reserve
- Section 16 (FTR Auctions Settlements): Updated to reflect changes allowing self-scheduling by class type
- Section 16 (FTR Auctions Settlements) and 17 (ARR Settlements): Clarified inclusion of long-term FTR auctions
- Section 17 (ARR Settlement): Added ARR allocation business rule for Direct Charging Energy consistent with PJM OATT.
- Section 20 (Billing): Updated to reflect current billing statement line items
- Section 22 (Open-loop Hybrid & Energy Storage): Corrected placement of following dispatch within 10% business rule.
- Section 23 (Fuel Cost Policy Penalty Settlements): New section added describing settlements methodology consistent with Operating Agreement Schedule 2

Revision 92 (07/26/2023):

- Conforming changes associated with ER22-2110-000 (Interconnection Process Reform)
- Section 5.2: updated references to Interconnection Service Agreement (ISA) to Generation Interconnection Agreement (GIA).

Revision 91 (06/01/2023):

- Conforming revisions to Sections 13 and 22 to incorporate rules for Open-Loop Hybrid Resources as approved by FERC Docket ER22-1420-002, effective 6/1/2023.
- Section 5.2.1 – add clarification of what intervals are included in segments for determination of Balancing Operating Reserve credits per FERC Docket ER23-557-000, effective 6/1/2023.

Revision 90 (01/25/2023):

- Conforming corrections and clarifications associated with ER19-1486 (Reserve Price Formation) effective October 1, 2022.
  - Section 5.2: Corrected how the Market Revenue Neutrality Offset is applied to the Balancing Operating Reserve Credit calculations (plus changed to minus)
  - Section 6.2.2 and 19.2.2: Corrected the Capped Real-time Reserve Assignment equation to reflect a result that is positive or zero.
  - Section 6.2.3 and 19.2.3:
    - Day-ahead Opportunity Cost – Clarified that expected energy output or load reduction level is from the dispatch run

        - Real-time Opportunity Cost – Clarified that expected energy output or load reduction level is from the pricing run
        - Clarified the Day-ahead and Real-time Opportunity Cost calculations for Economic Load Response Participants
    - Section 19.2.3:
        - Clarified the Secondary Reserve Day-ahead Opportunity Cost calculation for condensers
        - Clarified that Secondary Reserve Day-ahead and Real-time Opportunity Cost is $0 for off-line resources
    - Section 15.2
        - Clarified how Balancing Clearing Price Credits are calculated when determining the LOC Credit due to reduction for each reserve market.
- Updated manual ownership from Rebecca Stadelmeyer to Susan Kenney

Revision 89 (11/01/2022):

- Section 5.2.1: Associated with the Operating Reserve Clarification for Resources Operating as Requested by PJM problem statement – removed sentence that states “For Combustion Turbine units, operating at PJM direction, the actual five minute interval real-time output is used as the Operating Reserve Desired MW value”. Removal aligns with incentives to follow PJM dispatch.

Revision 88 (10/01/2022):

- Conforming changes associated with ER19-1486 (Reserve Price Formation)
- Section 1: updated service accounting definitions
- Section 5
    - Section 5.1:Added inclusion of Secondary Reserve and Market Revenue Neutrality Offset into different Operating Reserve calculations and Added language regarding Nuclear Units eligibility for Operating Reserve credits from Manual 11
    - Section 5.2: Added inclusion of Secondary Reserve and Market Revenue Neutrality Offset into different Operating Reserve calculations
    - Section 5.3: Clarify generator deviation calculation with the inclusion of Secondary Reserves
- Section 6
    - Overall clean-up for Tier I and Tier II language
    - Section 6.1: Clarification of how the Obligation is calculated between RTO zone and Sub-Zone
    - Section 6.2: Renamed and reworded for Day-ahead and Balancing Synchronized Reserve Market Clearing Price Credit; added 6.2.3 for Synchronized Reserve Lost Opportunity Cost Credit

  - Section 6.3: Added more details for the new charge calculations of Clearing Price and LOC; Re-word Retroactive Penalty Charge section for organization
  - Section 6.4: added clarification regarding the billing determinants per Reserve and Sub-zone
- Section 7: Updated all sections to reflect all associated calculations for credits and charges
  - Section 7.1: Clarification of how the Obligation is calculated between RTO zone and Sub-Zone
  - Section 7.2: Renamed and reworded for Day-ahead and Balancing Non-Synchronized Reserve Market Clearing Price Credit; added 7.2.3 for Non-Synchronized Reserve Lost Opportunity Cost Credit
  - Section 7.3: Added more details for the new charge calculations of Clearing Price and LOC
  - Section 7.4: added clarification regarding the billing determinants per Reserve and Sub-zone
- Section 15: was used for Ramapo PAR Facilities but now re-used for Market Revenue Neutrality Offset associated calculations. Ramapo PAR Facilities did not go away with ER19-1486. The PAR calculation moved into the Market-Market calculation
- Section 19: was used for Day-ahead Scheduling Reserves (DASR), but ER19-1486 removed this product. Re-used for new Secondary Reserves and all associated calculations for credits and charges.
- Section 20: updated Billing Line Item names

Revision 87 (07/27/2022):

- Conforming language associated with FERC Order ER20-1590 in Section 11 associated with Load Management Test and Retesting for an energy settlement.

Revision 86 (06/01/2022):

- Conforming changes to support the FERC Order (ER21-1802) for Stability Limits
  - Section 4.2.2.2
    - Added clarification language that the Desired MW output will consider the stability limits
  - Sections 5.2.6; 5.2.6.1; 5.2.6.2 and 5.2.6.4
    - Added clarification language that lost opportunity cost credits are not paid for the MWs associated with a stability limit reduction
    - Added clarification language on how the Desired MW output will consider the stability in effect
  - Sections 5.2.8 and 5.2.9
    - Added clarification language that the Desired MW output will consider the stability limits

- Section 6.2.2
  - Added clarification language that the Desired MW output will consider the stability limits

Revision 85 (09/01/2021):

- Conforming changes to support the FERC Order (ER19-2722) for Fast-Start Pricing
  - Sections 5.1, 5.2: added reference to Dispatch Differential Lost Opportunity Cost credits
  - Section 5.2.1: Describe the offset to Day-ahead Operating Reserve credits to account for double counting of commitment costs
  - Section 5.2.9: new section to describe the settlement calculations for resources that are eligible to receive Dispatch Differential Lost Opportunity Cost credits
  - Section 5.3.6: new section to describe the allocation of Dispatch Differential Lost Opportunity Cost credits as charges to market participants based on ratio share of real-time load plus exports
- Periodic Review to address:
  - Updated/correct terminology
  - Section 2: added 2.2 and 2.3; removed language regarding specific rules associated with CPLE, DUKE and NCMPA1 due to termination in 2020
  - Section 3: added 3.10
  - Section 4: added 4.2.1, 4.2.2, 4.2.2.1, 4.2.2.2, 4.3.1 and 4.3.2
  - Section 5.2.1: changed ‘Flexible Resources’ back to ‘Combustion Turbine units’ due to be being inadvertently changed during Intra-day Offer (IDO) implementation
  - Section 5: added 5.3.1, 5.3.2, 5.3.2.1, 5.3.2.2, 5.3.2.3, 5.3.2.4, 5.3.2.5, 5.3.3, 5.3.4 and 5.3.5
  - Section 6: added 6.2.1, 6.2.2, 6.3.1, 6.3.2 and 6.3.3
  - Section 7: added 7.2.1, 7.2.2, 7.3.1 and 7.3.2
  - Section 19: reorganized language

Revision 85 (06/01/2021):

- Updates for compliance with FERC Docket No. ER19-2722
  - Section 5.1, 5.2, 5.3 – descriptions and calculations for generator credits
  - 5.2.9 – new section to describe dispatch differential lost opportunity cost credits

Administrative Change: (02/04/2021, Approved by Rebecca Stadelmeyer):

- Updated manual ownership from Ray Fernandez to Rebecca Stadelmeyer

Revision 84 (12/17/2020):

- Updates for compliance with EL14-37, Allocation of uplift to up-to congestion transactions
  - Section 5.1, 5.3 – Add the sink end of cleared up-to congestion transactions to be allocated Day-ahead Operating Reserve charges.
  - Section 5.3 – Add the sink end of cleared up-to congestion transactions to the withdrawal deviation calculation for Operating Reserves.

Revision 83 (12/03/2019):

- Updates for compliance with FERC Order 841, Electric Storage Participation in Markets Operated by RTOs and ISOs, Docket No. RM 16-23-000
  - Section 13.1 – Note that Direct Charging Energy is not Station Power and end-use charging for an electric vehicle is end-use load.
  - Added Section 22 – Energy Storage Resource Charging Energy
    - Section 22.1 provides an overview of Energy Storage Resource Charging Energy
    - Section 22.2 describes the various charges related to Direct Charging Energy
    - Section 22.3 describes charges for Load Serving Charging Energy
    - Section 22.4 provides various methods to differentiate Direct Charging Energy from Load Serving Charging Energy for an Energy Storage Resource
    - Section 22.5 describes monthly reconciliation for Direct Charging Energy and Load Serving Charging Energy

Revision 82 (07/25/2019):

- Periodic Review updated to address:
  - Section 3.4 – Add process to handle condition when state-estimator loss MWh is unavailable
  - Section 5.2.5 – Remove entire section as Quick Start Reserve is obsolete
  - Section 5.2.8 – Update to describe Reactive Operating Reserve as being credited hourly
  - Section 19.3 - Provide consistency on terms used for Day Ahead Scheduling Reserve settlement
  - Correct various typos

Revision 81 (10/25/2018):

- Modified Section 5.2.1 for consistency with PJM OATT
- Added Section 21 to describe settlements related to Pseudo Tie Overlapping Congestion
- Modified Section 8.4.5 to include the Real-time Pseudo Tie Balancing Congestion refund as a component of the Total Balancing Congestion Charges

Revision 80 (06/01/2018):

- Modified Section 8.4.4 to account for shift in excess congestion credits from FTR Holders to ARR Holders

Revision 79 (04/01/2018):

- Updated Sections 1A.1 and 11.2 for five minute settlements changes per FERC Compliance Order issued on February 21, 2018
- Removed the reference to Manual 33 from the Introduction section

Revision 78 (04/01/2018):

- Added New Section 1.A.1 – Description of Revenue Data for five minute settlements
- Updated Sections 3, 4, 5, 6, 7, 8, 9, 10, 11, 12 and 13 for implementation of five minute settlements

Revision 77 (11/01/2017):

- Revised Section 5: Operating Reserve Accounting to reflect Intra-Day Offer changes as approved by FERC (ER-16-382-000).
- Revised Section 12: Meter Reconciliation Accounting to include pseudo-tie generator and dynamic schedule imports and exports and define the applicable rate as well as the impacted market participants.

Revision 76 (06/01/2017):

- Revised Section 8 :Transmission Congestion Accounting Overview to reflect Balancing Congestion changes as approved by FERC (ER16-121)

Revision 75 (11/18/2016):

- Updated Section 3.5 to provide a description of a fully metered EDC.

Revision 74 (07/01/2016):

- Cover to Cover Periodic review clarifying changes to better describe existing rules and processes.

Revision 73 (03/31/2016):

- Revision to Section 5.2.4 and 5.3 effective 03/31/16 to provide clarification language and establish consistency with M-11 and M-15 regarding cancellation fees.

Revision 72 (12/17/2015):

- Revision to Section 5.2.1 effective 12/14/2015 for offer cap language conforming to changes related to FERC Docket No. ER16-76-000.

Revision 71 (06/01/2015):

- Effective 6/1/2015, changes to section 5 to include the impact of load reconciliation MWh in the settlement of balancing operating reserve deviation charges and section 12 to include the extension for submitting monthly meter error corrections.

Revision 70 (04/01/2015):

- Added revisions to section 19 to account for additional day-ahead scheduling reserves scheduled in response to hot or cold weather alerts or escalating emergency conditions

Revision 69 (04/01/2015):

- Removal of revisions to section 5.2.1 Credits for Pool-Scheduled Generating Resources effective 01/16/2015 – 03/31/2015 offer cap language conforming change related to Docket No. EL15-31-000.
- Administrative change updated references from eSchedule to InSchedule.

Revision 68 (01/16/2015):

- Revisions to section 5.2.1 Credits for Pool-Scheduled Generating Resources effective 01/16/2015 – 03/31/2015 offer cap language conforming change related to Docket No. EL15-31-000.

Revision 67 (01/01/2015):

- Effective 1/1/2015, changes to Sections 10 and 11 to include the impact of load reconciliation MWh in the settlement of Emergency Energy and Emergency Load Response.

Revision 66 (10/30/2014):

- Effective 10/30/2014, changes to Section 6 to compensate resources based on tier 1 estimates only when those resources can be relied upon to provide Tier 1 Synchronized Reserve per the rules in Manual 11.

Revision 65 (04/24/2014):

- Effective, 4/24/2014 changes to Section 6 to incorporate the Manual 11 aggregate response business rule for the purpose of calculating Synchronized Reserve Market retroactive penalty charges.
- Effective 5/29/2014, revisions resulting from the Settlements Formulation Review project and other clean-up items.
- Regulation Credits (Sections 4.2) – Inclusion of regulation set point definition, percentage of hour calculation, and descriptions of regulation shoulder hour calculation scenarios.
- Operating Reserve Credits (Section 5.2) – Clarified eligibility rules for resources that trip or fail to start and added reference to Manual 14D notification procedures. Clarified balancing value calculation when units operate at a lower value in Real-time than their Day-ahead commitment.

- Load Response Accounting (Section 11) – Added definition of Actual MWh relief and corrected units.
- Day-ahead Scheduling Reserve Accounting (Section 19) – clarified that resources do not have a dispatchable range if the real-time fixed gen flag is enabled during the hour of the DASR award.
- Effective 6/1/2014, unless otherwise approved by FERC based on PJM compliance filing regarding the ER14-822 proceeding (improve DR resource operational flexibility). Updated Section 11 for the inclusion of Pre-Emergency DR in the Emergency DR settlements.

Revision 64 (04/11/2014):

- Two of the eSuite Applications have been renamed. Moving forward EES will be known as ExSchedule and eMTR will be known as Power Meter.

Revision 63 (12/19/2013):

- Conforming changes to Section 6 describing how penalties are assessed to a resource that fails to provide the amount of Tier 2 Synchronized Reserve it was assigned or self-scheduled to provide when a synchronized event occurs as well as the allocation of these penalties. These changes are effective 1/1/2014 per Docket #ER13-297.
- Conforming changes to Section 5 per Docket #ER13-2413 clarifying the requirements that must be satisfied in order for wind resources to be eligible to receive lost opportunity cost credits, effective 11/19/2013.

Revision 62 (10/01/2012):

- Conforming changes to Section 4 outlining settlements for Performance Based Regulation Credits and Charges per Docket #ER12-1204. Specifically, the credit changes include removal of the Marginal Benefits Factor for Regulation Capability Credit and Regulation Performance Credit and the application of the Mileage Ratio Multiplier for Regulation Performance Credit. Changes for the charge include specifics around the regulation obligation. Please note per the FERC Order these changes are retroactively effective to the Performance Based Regulation implementation date of October 1, 2012.

Revision 61 (08/29/2013):

- Section 5.2.6 and Section 5.2.8: Effective 6/1/2013, conforming changes to incorporate changes to limit lost opportunity cost compensation to the lesser of a unit's economic maximum or maximum facility output as approved by FERC in Docket ER13-1200.
- Section 7.2: Incorporation of Non-Synchronized Reserve Lost Opportunity Cost calculation details (shortage pricing clean-up), effective 10/1/2012
- Section 5.3: Clarifying revisions on exempting deviations during shortage conditions and revisions for associating interfaces to the East or West BOR regions.
- Section 5.2.3: Incorporated Lost Opportunity Cost Credit for Synchronous Condensing details

- Section 5.2.6: Wind Lost Opportunity Cost: clarified language to align with Tariff language

Revision 60 (06/01/2013):

- Section 5.3: Added EKPC to Western Region BOR
- Sections 3, 8, 9, and 11: Conforming changes to incorporate rules for Residual Zone Pricing as approved by FERC in Docket (s) ER13-347. Residual metered load pricing is effective 6/1/2015.

Revision 59 (04/22/2013):

Effective 4/22/2013:

- Changes to Section 2.1 required due to the elimination of the internal source and sink for Transmission Service products. Changes approved at 2/28/2013 MRC meeting.
- Incorporated changes to Section 13.1 endorsed at the 04/21/2010 MRC meeting but not included in subsequent manual versions. The approved change was to clarify Energy Storage Resources are Market Sellers excluded from the definition of Station Power.

Revision 58 (03/28/2013):

Effective 12/01/2012:

- Changes to Section 5 outlining the allocation of Day-ahead Operating Reserve Credits for resources scheduled to provide Reactive Services or transfer interface control per Docket #ER13-418.

Effective 01/15/2013:

- Changes to Section 8 and Section 14 incorporating revenues paid to or received from NYISO for JOA market-to-market congestion relief measures to the total transmission congestion charges allocated to FTR holders.

Effective 03/28/2013:

- Clean-up per settlements formulation review – Added footnote stating that diesel units types are treated liked CTs based on their similar operating characteristics.

Revision 57 (12/01/2012):

- Changes to Section 5 outlining the allocation of Operating Reserve Credits for the scheduling of units for Black Start service and testing of Black Start units.
- References to the eSchedules application were updated to InSchedule to reflect the recent upgrade and renaming of this PJM application
- UPDATED 02/19/2013 – Restored portions of Section 11 that were endorsed as part of Revision 55 that had been mistakenly deleted from subsequent revisions.

Revision 56 (10/01/2012):

- Conforming changes to incorporate rules for Shortage Pricing as approved by FERC in Docket (s) ER09-1063, ER12-2262, and ER12-2385, effective 10/1/2012.
- Conforming revisions made to sections 5 & 6. An additional section created, Section 7 – Non-Synchronized Reserve Accounting, to incorporate new rules.
- Revisions endorsed by Markets & Reliability Committee on 10/25/2012.

Revision 55 (10/01/2012):

Conforming tariff changes for Order 745 (ER11-4106-000), and elimination of economic DR energy compensation under Net Benefits Test threshold (ER12-1705-000) as follows:

- Section 5.1 (added note to include dispatchable resources and section 5.2, added new bullet that operating reserve credits are calculated for DR that follows dispatch signal
- Section 10.3 – includes all the new and prior rules for economic DR compensation in energy market, and associated changes for cost allocation.

Revision 54 (10/01/2012):

Based on the FERC Order 755 for Frequency Regulation Compensation in the Organized Wholesale Power Markets encompassed in FERC Docket Nos. ER12-1204 and ER12-2391, the following changes were made to these sections in this Manual.

- Section 4.1 – Regulation Accounting Overview added detail about two-part regulation settlement for capability and performance including the use of the marginal benefit factor and actual hourly performance score.
- Section 4.2 – Regulation Credits added detail about two-part regulation credit for capability and performance including the use of the marginal benefit factor and actual hourly performance score. Also added information about hydro lost opportunity cost calculation and after the fact lost opportunity cost.
- Section 4.3 – Regulation Charges added detail about two-part regulation settlement for capability and performance and regulation obligation for load.

Revision 53 (07/26/2012):

- Updated Section 3.5, 3.7, 4.4, 5.4, 6.4, 7.3, 8.3, 8.5, 11.1, 18.1, and 19.4 to reflect clarifications as recommended by the PJM Net Energy Metering Senior Task Force (NEMSTF).

Revision 52 (06/01/2012):

- Updated Section 5.2.6 to incorporate lost opportunity cost credit details for wind units per FERC Docket #ER12-1422.

Revision 51 (04/03/2012):

- Updated Section 6.1 to clarify that DR resources are compensated for shutdown costs via Operating Reserve credits.
- Updated Section 5.2.1 to clarify the applicability of 3.2.3(f-1) of the Tariff.

Revision 50 (01/01/2012):

- Updates to reflect integration of the DEOK zone

Revision 49 (09/15/2011):

- Section 2 Locational Marginal Pricing: Renamed Section 2 Interface Pricing and incorporated settlements interface pricing information. The Locational Marginal Pricing details were moved to Manual 11 in a previously approved revision.
- Section 4.2 Regulation Credits: Added details on the regulation tolerance amounts used in the calculation of regulation lost opportunity cost credits.
- Section 5.2.1 Credits for Pool-Scheduled Generating Resources: Clarified details on credits when PJM declares a Maximum Generation Emergency or a Maximum Generation Emergency Alert.
- Section 5.2.8 Credits for Resource Providing Reactive Services: Description of reactive credits for synchronous condensers corrected for consistency with the Tariff (Attachment K – Appendix Section 3.2.3B(i)).
- Section 7 Transmission Congestion Accounting – Replaced Total PJM Congestion Charges with Total Transmission Congestion Charges for consistency with Tariff terminology (Attachment K – Appendix Section 5.1.7). Clarified negative target allocations are hourly and based on net quantities.
- Section 7.4.4 Monthly Allocation of Excess Congestion Charges – Added details on the end of Planning Period ARR and FTR transmission rights uplift charges for completeness. This information was previously only documented in Manual 6 – Financial Transmission Rights.

Revision 48 (06/01/2011):

- Updates to reflect integration of ATSI zone

Revision 47 (04/01/2011):

- Correct adjusted obligation formulae in Sections 4 (Regulation) and 19 (Day-ahead Scheduling Reserve).

Revision 46 (10/01/2010):

- Revisions in Section 8, Transmission Losses Accounting, to exclude up-to congestion transaction MWh and to include a reduced amount of non-firm export MWh from the transmission loss credit allocation per FERC Order ER10-2280 effective September 17, 2010.

- Revisions in Section 12, Station Power Accounting, to exclude compressed air energy resources from the station power definition.

Revision 45 (06/23/2010):

- Revisions resulting from 2010 PJM review approved at June 16, 2010 MRC meeting.
- Revisions in Section 10, PJM Load Response Programs Accounting, for economic load response and Real-time index based contracts approved at June 16, 2010 MRC meeting.

Revision 44 (02/01/2010):

- Revised Meter Reconciliation Accounting section to reflect the changes to the Meter Correction Allocation as approved by FERC (Docket No. ER10-320).

Revision 43 (01/20/2010):

- Revised Transmission Losses Accounting section to reflect the changes to the distribution of Transmission Loss Charges as retroactively approved by FERC (EL08-14)
- Added clarifying item in the Operating Reserve Accounting section related to the Day-ahead pumped storage optimization program

Revision 42 (07/31/2009):

- Revised Operating Reserve Accounting section to reflect Balancing Operating Reserve construct change as approved by FERC (ER08-1569)
- Add several new load reconciliation charge descriptions that were recently implemented.
- Revised Regulation Accounting section to allow for the recovery of lost opportunity costs incurred by generating market buyers and market sellers during the hour preceding the initial regulating hour and the hour following the final regulation hour as approved by FERC (ER09-789)

Revision 41 (11/01/2008):

- Cleaned up to better align with new settlement system

Revision 40 (6/1/2008):

- Section 7: Revised to reflect new allocation method for any end-of-planning period excess congestion revenues

Revision 39 (1/01/2008):

- Added business rules for InSchedule and Power Meter Data Submissions

Revision 38 (06/01/2007):

- Revisions were made to reflect the implementation of Marginal Losses and for general clean-up.

Revision 37 (03/07/2007):

- Section 2: Revised to add a section titled “Calculation of Real-Time Locational Marginal Price”

Revision 36 (01/01/2007):

- Section 5: Clarified the hourly Operating Reserve deviation charge eligibility for generators not following PJM dispatch signals.
- Introduction trimmed to eliminate redundant information.
- List of PJM Manuals exhibit removed, with directions given to PJM Web site where all the manuals can be found.
- Revision History permanently moved to the end of the manual

Revision 35 (09/26/06):

- Section 4: Clarified the generator energy offer data used by PJM for Regulation lost opportunity cost credit calculations.
- Section 5: Clarified the hourly Operating Reserve credit eligibility for when a generator trips.

Revision 34 (08/28/06):

- Exhibit 1: Updated to include the new Manual 30: Alternative Collateral Program.
- Section 5: Modified rules to clarify the determination of a resource’s hourly Desired MWh and no-load compensation values.
- Section 10: Modified section for revised rules for Demand Response Participation.

Revision 33 (05/01/06):

- Change to Section 4: Regulation Accounting. Add demand side response regulation charges and credits.
- Change to Section 6: Spinning Reserve Accounting. Rename spinning reserve market to synchronized reserve market and add demand side response synchronized reserve charges and credits.
- Revisions were also made to globally change “spinning” to “synchronized.”

Revision 32 (03/01/06):

- Change to Section 5: Operating Reserve Agreement Accounting, “Charges for Operating Reserves”. Revised to remove requirement that self-scheduled generator deviation exemptions must be requested in writing.
    - Revisions were made on the following page: 44.

Revision 31 (11/01/05):

Cleanup changes to clarify the single Regulation market and to clarify Operating Reserves charges.

Revision 30 (08/01/05):

- Cleanup changes to clarify the single Regulation market and to clarify Operating Reserves charges.
- Changes to Section 5: Operating Reserve Agreement Accounting, “Credits for Pool-Scheduled Generating Resources”. Revised to include clarification on the elimination of credits during Maximum Emergency operating days.
- Changes to Section 5: Operating Reserve Agreement Accounting, “Charges for Operating Reserves”, Part 6. Revised to enable generating units that trip to retain Operating Reserve eligibility for period of time the unit was running for PJM.
- Changes to Section 5: Operating Reserve Agreement Accounting, “Credits for Pool Scheduled Generating Resources”, Part 4a. Revised to exempt from Balancing Operating Reserve deviation charges, generators that are self-scheduled but have a dispatchable range when following PJM dispatch above minimum.

Revision 29 (05/20/05):

- Minor changes including mention of MISO JOA market-to-market revenues in Congestion Credit section and clarifications to Operating Reserves charge and credit calculations.

Revision 28 (05/05/05):

- Charges for Operating Reserves - revised part 4A.
- Meter Correction Billing – corrected meter error data submittal timeframe.

Revision 27 (10/01/04):

- Revised to reflect the integration of AEP/Dayton.

Revision 26 (05/01/04):

- Revised to reflect the integration of ComEd.

Revision 25 (04/23/04):

- Revised Section 5: Operating Reserves Accounting to include credits to generators that adjust active power output at PJM’s direction for the purpose of maintaining reactive reliability (Reactive Services). Expanded and clarified provisions regarding lost opportunity cost compensation to generators that are reduced or suspended by PJM due to a transmission constraint or for other reliability purposes. Also clarified the provisions for exempting balancing operating reserves charges and for including energy use costs in synchronous condensing credits.
- Revised Section 7: Transmission Congestion Accounting to reflect the transitional Financial Transmission Rights (FTR) Allocation and FTR reassignment process that will be conducted for new zone load being added as a result of market growth.

- Revised Section 7: Transmission Congestion Accounting to adjust the allocation period for excess congestion revenues from a calendar year basis to a PJM planning period basis.

Revision 24 (07/01/03):

- Revised Section 5: Operating Reserves Accounting to reflect the credits for resources performing an annual scheduled Black Start test.
- Revised Section 7: Transmission Congestion Accounting Overview to reflect the updated allocation procedures for Transmission Congestion Credits.
- Revised Section 16: Financial Transmission Rights Auctions Settlement to reflect the PJM Annual and Monthly FTR Auctions settlement.
- Added Section 17: Auction Revenue Rights Settlements.

Revision 23 (02/01/03):

- Revised Section 11: Meter Reconciliation Accounting to reflect the updated meter error data submission requirement.

Revision 22 (12/01/02):

- Revised Section 5: Operating Reserves. Revision coincides with the inclusion of the Spinning Reserve Section.
- Added new Section 6: Spinning Reserve Accounting. All remaining sections re-numbered respectively.

Revision 21 (10/01/02):

- Added new Section 9: PJM Load Response Programs Accounting.
- All remaining sections re-numbered respectively.

Revision 20 (06/01/02):

- Revised to reflect the new Emergency Energy allocation procedures.
- Revision 19 (04/01/02)
- Revised to reflect the changes to incorporate the PJM West Region and Rockland Electric Company.

Revision 18 (07/01/01):

- Added new Section 10: Station Power Accounting.
- Renumbered Sections 10 through 14 to 11 through 15 respectively.

Revision 17 (06/01/01):

- Revised to reflect the implementation of the PJM Power Meter System.

Revision 16 (05/17/01):

- Revisions have been made to Section 6: Transmission Congestion Accounting. Revised to include additional detail to further clarify excess congestion allocation procedures.

Revision 15 (12/01/00):

- This revision contains the removal of Attachment A: Definitions and Abbreviations. Attachment A is being developed into a 'new' PJM Manual for ***Definitions and Abbreviations (M-35)***.

Revision 14 (06/01/00):

- Section 5: Operating Reserves Accounting
- Revised subsection "Credits for Pool-Scheduled Generating Resources." Corrected to remove the description of a credit adjustment during Max Emergency conditions.

Revision 13 (06/01/00):

- All Sections updated to reflect Two Settlement implementation of a Day-Ahead Energy Market and the new Regulation Market.

Revision 12 (01/03/00):

- Section 5: Operating Reserves Accounting was updated to reflect a short run solution (effective 01/01/00) to correct for a market design flaw related to bidding constraints.

Revision 11 (09/23/99):

- Section 5: Operating Reserves Accounting was updated to reflect the FERC approval of the application of operating reserves charges on all export transactions and approval of the new opt out procedures (dynamic scheduling) for those that want to opt out of spot market backup.

Revision 10 (08/02/99):

- Section 2: Locational Marginal Price was expanded to include a new sub-section containing information on PJM's Locational Marginal Price verification procedure.

Revision 09 (06/01/99):

- Added new Section 13: Fixed Transmission Rights Auction Settlements
- Billing section re-numbered as Section 14

Revision 08 (04/01/99):

- Section 03: Spot Market Energy Accounting
  - Addition of Reconciliation Billing
- Section 4: Regulation Accounting
  - Addition of Reconciliation Billing

- Section 5: Operating Reserves Accounting
  - Addition of Reconciliation Billing and updated Market-based Pricing in the calculation of Operating Reserves credits
- Section 7: Transmission Losses Accounting
  - Addition of Reconciliation Billing

Revision 07 (01/01/99):

- Section 03: Spot Market Energy Accounting
  - 5% penalty for self-scheduled resources no longer in effect. Elimination of Non-Delivery Charges
- Section 12: Capacity Credit Market Accounting
  - New section which replaces Emergency Reliability Service Accounting

Revision 06 (12/07/98):

- Section 06: Transmission Congestion Accounting
  - Modifications were made to “Transmission Congestion Charges.” A note, explaining calculation of implicit congestion charges when a radial transmission limitation exists, was also added to “Transmission Congestion Charges.”

Revision 05 (10/13/98):

- Section 05: Operating Reserves Accounting
  - Modifications made to “Charges for Operating Reserves” reflecting all Market Participants having the opportunity to buy and sell power in the Spot Market on an hourly basis

Revision 04 (07/01/98):

- Section 01: Market Overview
  - Corrections made to “Market Accounting Overview.”
- Section 03: Spot Market Energy Accounting
  - Corrections made to “PJM Actions” of “Interchange Seller’s Credits.”
- Section 05: Operating Reserves Accounting
  - Corrections made to “PJM Actions” of “Credits for Canceled Pool-Scheduled Resources” under “Credits for Operating Reserves.”
  - Corrections made to “PJM Actions” of “Credits for Pool-Scheduled Aggregate Resources” under “Credits for Operating Reserves.”
  - Corrections made to “PJM Actions” of “Cost of Operating Reserves.”
  - Corrections made to “PJM Actions” of “Charges for Operating Reserves.”
  - Section 13: Billing

- Corrections made to “Billing Process Overview.”

Revision 03 (06/15/98):

- Section 03: Spot Market Energy Accounting
  - Corrections made to Non-Delivery Charges formulas
- Section 08: Emergency Energy Accounting
  - Corrections made to Emergency Energy Purchases by PJM and Minimum Generation Emergency Purchases by PJM formulas

Revision 02 (05/01/98):

- All sections revised for change from “Market Clearing Price” to “Locational Marginal Price.”
- Deleted Attachments B, C, and D

Revision 01 (01/06/98):

- Section 4: Regulation Accounting
  - Added “(6) PJM calculates the Average Cost of Regulation dispatched by PJM from all Generating Market Buyers and Market Sellers supplying excess Regulation at the direction of PJM” under “Regulation Credits.”
  - Added “(7) If according to the Regulation log, PJM is deficient of its Control Area Regulation requirement for the hour, additional credits (Total PJM Regulation MW Deficiency * Average Cost of Regulation) are allocated to Market Buyers and Market Sellers based on their percentage of total Regulation supplied’ under “Regulation Credits.”
  - Deleted “(2) PJM calculates the average cost of Regulation dispatched by PJM from all Generating Market Buyers and Market Sellers supplying excess Regulation at the direction of PJM” under “Regulation Charges.”
  - Added “(4) If according to the Regulation log, PJM is deficient of its Control Area Regulation requirement for the hour, additional charges for any remaining regulating deficiency (not satisfied by self-scheduled, allocated pool-scheduled, or allocated self-scheduled excess regulation) are assessed to Internal Market Buyers and Market Sellers, that are also Internal Market Buyers, at the Average Cost of Regulation” under “Regulation Charges.”

Revision 00 (09/02/97):

- This revision is the preliminary draft of the PJM Manual for Operating Agreement Accounting.