PJM Manual 14D:

Generator Operational Requirements

Revision: 72

Effective Date: November 18, 2026

Prepared By
Operations Planning Division

PJM © 2026

Table of Contents

Table of Exhibits 5

Approval 7

Current Revision 8

Introduction 11

About PJM Manuals 11

About This Manual 11

Using This Manual 13

Section 1: Generator Markets and Operations 14

1.1 Generator Interconnection Process: Markets and Operations Phase 14

1.2 Generator Commercial Naming Convention 18

Section 2: Responsibilities of Generation Owners 20

2.1 Generation Owners' Responsibilities 20

2.2 Transfers of a Generation Facility and Name Changes of Generation Owners and Project Developers 21

2.3 Generator Market Remodel 24

2.4 eDART Modeling 24

Section 3: Control Center Requirements 25

3.1 PJM Control Center Categories for Generating Entities 25

3.2 Control Center Requirements for Generating Entities 26

3.3 Interpersonal Communication Requirements for Generating Entities 27

Section 4: Data Exchange and Metering Requirements 29

4.1 EMS Data Exchange Requirements 29

4.2 Data Management and Metering Requirements 35

4.3 Synchrophasor Communication System 43

Section 5: Participation in PJM Markets 46
5.1 Marketing Options 46
5.2 Ancillary Services 47
5.3 Markets and Operations Tools 48
5.4 Description of the Two-Settlement System 49
5.5 Pre-Scheduling and Scheduling 51
5.6 Unit Commitment 52
5.7 Generation Transfer Process 53

Section 6: Pre-Operational Requirements 59
6.1 Data Exchange Testing 59
6.2 Training and PJM TO Operator and Generation Dispatcher Certification 63
6.3 Coordination with Dispatch 63

Section 7: Generator Operations 67
7.1 Dispatching of Generation 67
7.2 Switching Requirements 82
7.3 Critical Information and Reporting Requirements 83
7.4 Synchronization and Disconnection Procedures 90
7.5 Cold Weather Generation Resource Preparation 90
7.6 Generation Operational Testing 91

Section 8: Wind Farm Requirements 93
8.1 EMS Data Exchange 93
8.2 Wind Farm Data Requirements for Wind Power Forecasting 94
8.3 Forecast Data Usage 96

Section 9: Generator Deactivations 98
9.1 Generator Deactivation Process 98
9.2 Compensation to Generators Requested to Remain in Service for Reliability 101
9.3 Transparency Into Estimated Generation Deactivation Charges 102

Section 10: Black Start Generation Procurement 104

10.1 Black Start Selection Process 104

10.2 Black Start Incremental RFP Process 110

10.3 Black Start Reliability Backstop Process 113

Section 11: Generator Data Confidentiality Procedures 116

11.1 Generator Data Confidentiality Procedures 116

Section 12: Solar Park Requirements 119

12.1 EMS Data Exchange 119

12.2 Solar Park Data Requirements for Solar Power Forecasting 120

12.3 Forecast Data Usage 123

Section 13: Mixed Technology Facility Requirements 124

13.1 Marketing and Classification of Mixed Technology Facilities 124

13.2 Other Requirements 126

Attachment A: New Generator Checklist 127

Attachment B: New PJMnet Customer Implementation Voice/Data Communications Template 132

Attachment C: New PJM Customer Voice/All Call Communications Request Form 136

Attachment D: PJM Generating Unit Reactive Capability Curve Specification and Reporting Procedures 138

Attachment E: PJM Generator and Synchronous Condenser Reactive Capability Testing 147

Attachment F: Deleted 161

Attachment G: Deleted 162

Attachment H: PJM Generation and Transmission Interconnection Planning Team Role Clarity Diagram 163

Attachment I: Deleted 164

Attachment J: Generator – Data Release Matrix 165

Attachment K: Deleted 166

Attachment L: Jointly Owned Resource Communication Model ... 167

Attachment M: Wind and Solar Unit Dispatchability Check List.... 171

Attachment N: Cold Weather Preparation Guideline and Checklist 174

N.1 Introduction 174
N.2 Management Roles and Expectations 174
N.3 Pre-Winter Season Items - All Generating Facilities 175
N.4 Equipment Preparation - Conventional Generating Facilities 177
N.5 Equipment Preparation - Inverter-Based Resources 182
N.6 Actions When Cold Weather is Forecasted 183
N.7 Actions During Cold Weather 184
N.8 Actions Following Cold Weather 184
N.9 References 184

Appendix A: Behind the Meter Generation Business Rules 185

Appendix B: Public Distribution Microgrid Business Rules 201

Appendix C: Voluntary Guidelines on Public Distribution Microgrid Operations 204

Revision History 205

Table of Exhibits

Exhibit 1: Generator Markets and Operations Process Flow and Timeline 14

Exhibit 2: Guidelines for Metering Installation 30

Exhibit 3: Equipment Types for Data Exchange with PJM 31

Exhibit 4: Typical Internet DNP Configuration 32

Exhibit 5: Summary of EMS Data Requirements and Exchange Rates 32

Exhibit 6: PJM Real-Time and Revenue Data Precision Requirements..... 34

Exhibit 7: Metering requirements example for a Mixed Technology Facility .. 41

Exhibit 8: Energy Storage Resource Metering Example 42

Exhibit 9: Criteria for Determining Capacity Shortage Emergency Conditions..... 79

Exhibit 10: Criteria for Determining Light Load Emergency Conditions 80

Exhibit 11: Generation Deactivation Process Flow 102

Exhibit 12: Generator Data Sharing Process Flow..... 118

Exhibit 13: New Generation Checklist 130

Exhibit 14: Inverter Based ESR Reactive Capability Curve 140

Exhibit 15: Example of inverter-based AC-coupled open-loop Hybrid Resource with 100 MW solar and 40 MW battery..... 141

Exhibit 16: Example of inverter-based DC-coupled open-loop solar-storage Hybrid Resource with 100 MW solar and 100 MW battery. 142

Exhibit 17: PJM Unit Reactive Capability Curve Data Format..... 142

Exhibit 18: Joint Owned Resource Communication Model 1 168

Exhibit 19: Joint Owned Resource Communication Model 2 169

Exhibit 20: Guidelines for Markets and Real-Time Communication between Dispatch and Joint Owned Resource Owners, Option 2. 169

Approval

Approval Date: 07/27/2026
Effective Date: ~~07/28/2026~~11/18/2026

Michael Zhang, Manager

Generation Department

Current Revision

Revision 72 (11/18/2026):

- Cover-to-cover periodic review
- Introduction: About this Manual
  - Updated references to number of sections and appendices within this manual
- Introduction: References
  - Updated reference to PJM Manual 21-B: Rules and Procedures for Determination of Generating Capability
- Section 2.1: Generator Owners' Responsibilities
  - Updated reference to edartgosurvey@pjm.com for questions related to Generation Owner data requests in eDART
- Section 4.1: EMS Data Exchange Requirements
  - Updated reference to Exhibit 2: Guidelines for Metering Installation
- Section 5.3.5: Markets and Operations Tools – eGADS
  - Clarified unit availability is an input to PJM's accreditation process for capacity resources
- Section 5.7.2.3: Fuel Cost Policy
  - Updated reference to PJM Manual 15: Cost Development Guidelines, Section 2.2: Fuel Cost Policies and Deadlines
- Section 5.7.2.10: Generation Transfer Process – PJM Tools
  - Updated reference to edartgosurvey@pjm.com for questions related to updating Generation Owner contact information in eDART
- Section 6.3.4: Coordination with Dispatch – Other Requirements
  - Updated reference to PJM Manual M03, Transmission Operations, Section 3.11: Generator Voltage Schedules
- Section 7.3.5: Fuel, Emissions and Operational Data Reporting Background and Intent
  - Updated reference to PJM Manual 13: Emergency Operations, Section 3.3: Cold Weather Alert

- Section 7.3.6: Generation Owner Periodic Tasks and Data Submittals
  - Updated the guideline: Generation Owner Periodic Tasks and Data Submittals
- Section 11.1.3: Dispute Resolution
  - Updated Reference to PJM Manual M33: Administrative Services for the PJM Interconnection Operating Agreement, Section 7: Dispute Resolution
- Attachment D: PJM Generating Unit Reactive Capability Curve Specification and Reporting Procedures
  - Updated references to Generation Owner to align with changes in Revision 46
- Attachment M: Wind and Solar Dispatchability Check List
  - Updated reference link to Markets Gateway User Guide
- Attachment N: Cold Weather Preparation Guideline and Checklist
  - Omitted out of date references
- Appendix A: Behind the Meter Generation Business Rules
  - Updated contact information for submitting EMS quarterly model updates to PJM's Power Systems Modeling Group by the deadlines posted in the Modeling User's Forum
- Revisions related to Wind and Solar Resource Dispatch in Real-time Market Clearing Engines
  - Section 8: Wind Farm Requirements
    - Restored reference to available "Curtailment Indicator"
  - Section 12: Solar Farm Requirements
    - Added reference to available "Curtailment Indicator"
  - Attachment L: Jointly Owned Resource Communication
    - Restored reference to "Curtailment Indicator"
  - Attachment M: Wind and Solar Unit Dispatchability Check List
    - Revised language and guidance that includes available curtailment flag for wind and solar resources
    - Added reference to guidance following dispatch in PJM Manual 11: Energy & Ancillary Services Market Operations
- Updated NERC Standards to exclude revision numbers throughout

- Replaced security analysis with contingency analysis to align with industry standard
- Corrected typos, punctuation errors, and hyperlinks throughout

~~Revision 71 (07/28/2026):~~

- ~~Compliance revisions to 7.1.2 Voltage and Reactive Control:~~
  - ~~Added reference for gens to follow default voltage schedules if not on a specific schedule designated by the TO and PJM~~
  - ~~Adjusted the MVA and Voltage threshold for gens to follow voltage schedules per the newly created NERC Category 2 GO/GOP for mid-sized IBRs to follow NERC reliability rules~~
  - ~~Clarified that the only acceptable AVR mode is Voltage Control Mode, without documented and approved exception~~
  - ~~Added Volt-Var Reactive Control Assessment Graph~~
  - ~~Added Reactive Control Range by MW Output Graph~~
  - ~~Added Enforcement section~~
- ~~Attachment D: PJM Generating Unit Reactive Capability Curve Specification and Reporting Procedures:~~
  - ~~Added further details to the definition of "Maximum AVR capable MW Output"~~
  - ~~Added a new required parameter, "Unit Minimum MW Output with Reactive Control"~~

Introduction

Welcome to the *PJM Manual for Generator Operational Requirements*. In this Introduction you will find information about PJM Manuals in general, an overview of this PJM Manual in particular, and information on how to use this manual.

About PJM Manuals

The PJM Manuals are the instructions, rules, procedures, and guidelines established by PJM for the operation, planning, and accounting requirements of the PJM Balancing Authority and the PJM Energy Market. The manuals are grouped under the following categories:

- Transmission
- PJM Energy Market
- PJM Regional Transmission Planning Process
- Reserve
- Accounting and Billing
- PJM administrative services
- Miscellaneous

For a complete list of all PJM Manuals, go to the Library section on PJM.com.

About This Manual

The *PJM Manual for Generator Operational Requirements* is one of the PJM procedure manuals. This manual focuses on the markets and operations requirements for generating entities to connect to the PJM system and their responsibilities as signatories to the Operating Agreement of PJM Interconnection, L.L.C.

This manual also refers to other PJM manuals, which define in detail the telecommunication protocols, redundancy requirements, accuracy and periodicity of data, generator obligations, reporting requirements, market participation requirements, and accounting procedures established to ensure reliable operation.

The *PJM Manual for Generator Operational Requirements* consists of 13~~12~~ sections, 14 attachments (labeled A through N), and three appendices~~one appendix~~ (Appendix A - C). All are listed in the table of contents beginning on page 1~~2~~.

Intended Audience

The intended audiences for this PJM Manual for Generator Operational Requirements are:

- Applicants to the Operating Agreement of PJM Interconnection, L.L.C.
- Generation Owners or those interested in siting and building generation in the PJM Balancing Authority.
- Operations planning staff and plant personnel for generating entities
- PJM Members
- PJM staff

Definitions and Applicability

The defined terms used in this manual are intended to have the same meaning as specified in the PJM Governing Agreements.

The requirements enumerated throughout PJM Manual 14-D apply to all Generating Facilities interconnected to the PJM Transmission System and/or participants in the PJM markets, unless otherwise specified.

References

There are other PJM documents that provide both background and detail on specific topics. These documents are the primary source for specific requirements and implementation details. This manual does not replace any of the information in those reference documents. The references for the *PJM Manual for Generator Operational Requirements* are:

- PJM Operating Agreement (OA)
- PJM Reliability Assurance Agreement (RAA)
- PJM Manual for Control Center and Data Exchange Requirements (M-01)
- PJM Manual for Transmission Operations (M-03)
- PJM Manual for Energy Management System (EMS) Model Updates and Quality Assurance (QA) (M-03A)
- PJM Manual for Pre-Scheduling Operations (M-10)
- PJM Manual for Energy & Ancillary Services Market Operations (M-11)
- PJM Manual for Balancing Operations (M-12)
- PJM Manual for Emergency Operations (M-13)
- PJM Manual for Generation and Transmission Interconnection Process (M14-A)
- PJM Manual for PJM Regional Transmission Planning Process (M-14B)
- PJM Manual for Generation and Transmission Interconnection Facility Construction (M14-C)
- PJM Manual for New Service Requests Cycle Process (M14-H)
- PJM Manual for Rules and Procedures for Determination of Generating Capability (M-21B)

- PJM Manual for Open Access Transmission Tariff Accounting (M-27)
- PJM Manual for Operating Agreement Accounting (M-28)
- PJM Manual for Billing (M-29)
- PJM Manual for Administrative Services for the PJM Interconnection Agreement (M-33)
- PJM Manual for Training and Certification Requirements (M-40)
- eDART User Guide
- GADS User Manual

Using This Manual

We believe that explaining concepts is just as important as presenting procedures. This philosophy is reflected in the way we organize the material in this manual. We start each section with the "big picture." Then we present details, procedures or references to procedures found in other PJM manuals.

What You Will Find In This Manual

- A table of contents that lists two levels of subheadings within each of the sections and attachments
- An approval page that lists the required approvals and a brief outline of the current revision
- Sections containing the specific guidelines, requirements, or procedures including PJM actions and PJM Member actions
- Attachments that include additional supporting documents, forms, or tables
- A section at the end detailing all previous revisions of this PJM Manual

Section 1: Generator Markets and Operations

Welcome to the Generator Markets and Operations section of the PJM Manual for Generator Operational Requirements. This section presents the following information:

- A summary of the Markets and Operations phase of the Generator Interconnection Process (see "Generator Interconnection Process: Markets and Operations Phase").
- Rules for assigning a commercial plant/unit name to new generation (see "*Generator Commercial Naming Convention*").

1.1 Generator Interconnection Process: Markets and Operations Phase

The Generator Markets and Operations phase is initiated during the final agreement (e.g Generation Interconnection Agreement (GIA), Interconnection Service Agreement (ISA) and Construction Service Agreement (CSA)) implementation phase of the generator interconnection process. The Interconnection Coordination (IC) Project Manager coordinates the activities of PJM Internal Coordination (Operations Planning, System Operations, Member Relations, PJMnet, EMS) and the Generation Owner to complete the Generator Markets and Operations activities during this phase. After the final agreement implementation phase, PJM team leadership is transferred from the IC Project Manager to PJM Member Relations (see Attachment H for Implementation Team Role Clarity Diagram).

The table below describes PJM Generator Markets and Operations interconnection process flow and timeline.

Activity	Duration		Manual Reference
	Activity	Cumulative	
Activity 1: PJM Interim Capacity Study A. System planning updates new generation project list with current generator in-service date	**(1-10d)** **10 days**	**10 days**	**-**
Activity 2: EMS Model Update A. PJM Transmission and Interconnection Planning provides	**(11-80d)** **70 days**	**80 days**	**Section 4**

Activity	Duration		Manual Reference
	Activity	Cumulative	
modeling information and commercial name for plant & units to System Operations B. System Operations submits Model Change requests to Engineering Support for database updates C. New database tested & installed on production EMS			
Activity 3: Establish Metering Plan A. PJM Member Relations sets up meeting to discuss new generation with customer • (Project Schedule • Revenue and real-time options • PJM metering requirements • Business plan for unit B. Customer applies for PJM Tools Accounts based on business plan C. Confirm metering plan between Market Settlements, Operations Planning & Market Operations D. Finalize Point Exchange List	**(81-100d)** **20 days**	**100 days**	**Section 4**

Activity	Duration		Manual Reference
	Activity	Cumulative	
Activity 4: PJM*net* Installation A. PJM*net* Telecommunications form sent to customer B. PJM*net* form filled and returned by customer C. Customer and PJM technical staff work together to establish the applicable type of connectivity D. PJM*net* Installation completed	**(101-190d)** **90 days**	**190 days**	**Section 4**
Activity 5: Metering & Communications Installation A. Customer Firewalls complete (if applicable) B. Communication paths for RTU & GMS complete C. PJM Real-Time Operations Support Department and Customer verify telemetered data accuracy.	**(181–190d)** **10 days**	**190 days**	**Section 4**
Activity 6: Data Exchange Testing A. Begin Testing with PJM B. Verify data exchange accurate C. Communications Online	**(191-200d)** **10 days**	**200 days**	**Section 6**

Activity	Duration		Manual Reference
	Activity	Cumulative	
Activity 7: Confirm Voice, Communications & Dispatch Operations A. PJM technical staff and customer initiates installation of data communications & circuit testing B. Facilities Department installs voice communications for dispatch services	**(191-200d)** **10 days**	**200 days**	**Section 6**
Activity 8: Member Relations review Operations Requirements A. Pre-scheduling and Scheduling Requirements B. Unit Commitment C. Dispatching of Generation D. Switching Requirements E. Training and PJM TO Operator and Generation Dispatcher Certification F. Critical Information and Reporting Requirements G. Compliance with Synchronization and Disconnection Procedures	**(191-200d)** **10 days**	**200 days**	**Section 7**
Activity 9: PJM review of Data & Markets	**(201-210d)** **10 days**	**210 days**	**-**

Activity	Duration		Manual Reference
	Activity	Cumulative	
A. Market Settlements & operations approve unit plans and establish market accounts			
Activity 10: Capacity Status Granted A. Customer applies for Cap Mod status via Capacity Exchange B.PJM Capacity Market Operations grant capacity status	**(211-215d)** **5 days**	**215 days**	**-**

Exhibit 1: Generator Markets and Operations Process Flow and Timeline

1.2 Generator Commercial Naming Convention

New generation in PJM is assigned a commercial plant or unit name by PJM and the developer prior to its incorporation in the PJM model. The commercial names must be initiated before the execution of the Generation Interconnection Agreement. The following convention has been established for assigning commercial plant or unit names to new generation projects:

1. The commercial names will be assigned by PJM in collaboration with a representative from the developer.

2. Where possible, the commercial names will be associated with the assigned name given by the plant owner to maintain consistency during construction and the future operation of the plant.

3. The name shall not be the name of parent company or LLC unless the LLC name is only affiliated with that plant.

For example, a plant name of Big Energy generating station, owned by Big Energy LLC, that also owns other generating stations, is not acceptable. However, the name Red generating station with a legal name of Red LLC, for a plant that is a subsidiary of Big Energy, LLC is acceptable.

4. In the event that an interconnection substation is installed, and owned by the Transmission Owner, the name of interconnection substation should be agreed upon by PJM and the

Transmission Owner. This interconnection substation should not take on the name of the generating unit. The generator “collector” station shall match the generator name.

Note:
The name of the developer is generally recognized as unacceptable as future projects by the same developer may cause similar confusion.

5. In the event that existing units are already named after the assigned name given by the plant owner, and it is deemed inappropriate to add additional sequential numbers to the existing units’ naming convention, the following shall be used:

A local geographic name (in a Township, Borough or Town designation) or PJM substation will be used based on the physical location of the generation in collaboration with host Transmission Owner.

6. In the event that a local geography name has already been used in another part of PJM, a local landmark will be identified and used for the PJM naming convention in collaboration with host Transmission Owner.

7. In any event, the generator name will be unique and differentiate itself from other names already used within the PJM system, or neighboring systems if known.

Section 2: Responsibilities of Generation Owners

Welcome to the *Responsibilities of Generation Owners* section of the *PJM Manual for Generator Operational Requirements*. In this section you will find the following information:

- Generation Owners Responsibilities in the PJM Balancing Authority
- Transfers of a Generation Facility and Name Changes of Generation Owners

2.1 Generation Owners' Responsibilities

As defined in the PJM Operating Agreement, a "Generation Owner" shall mean a Member that owns or leases, with right equivalent to ownership, or otherwise controls and operates one or more operating generation resources located in the PJM Region.

The foregoing notwithstanding, for a planned generation resource to qualify a Member as a Generation Owner, such resource shall have cleared an RPM auction, and for Energy Resources, the resource shall have a FERC-jurisdictional interconnection agreement or wholesale market participation agreement within PJM. Purchasing all or a portion of the output of a generation resource shall not be sufficient to qualify a Member as a Generation Owner.

For purposes of Members Committee sector classification a Member that is primarily a retail end-user of electricity that owns generation may qualify as a Generation Owner if:

1. The generation resource is the subject of a FERC-jurisdictional interconnection agreement or wholesale market participation agreement within PJM
2. The average physical unforced capacity owned by the Member and its affiliates over the five Planning Periods immediately preceding the relevant Planning Period exceeds the average PJM capacity obligation of the Member and its affiliates over the same time period; and
3. The average energy produced by the Member and its affiliates within PJM over the five Planning Periods immediately preceding the relevant Planning Period exceeds the average energy consumed by the Member and its affiliates within PJM over the same time period.

Note that PJM requires a Generation Owner to have a single point of contact for real-time and near real-time operations. That single point of contact has to communicate and coordinate with the appropriate PJM member corporate entity to fulfill the assigned responsibilities.

As soon as practicable, but no later than 3 business days following a new generation resource being placed in commercial operation as defined in Manual 14C Section 1.6.1 or a generation transfer, the "eDART Contact" responsible for tickets and data submittals in eDART must complete the eDART Contact Survey – all fields are required. This information must also be updated whenever the primary or secondary individual responsible for a generation resource changes. The survey is accessed by signing into the eDART tool, selecting the "Gen. Tickets"

menu item, and then selecting GO Survey for Contact Information from the GO Data Request menu. Questions can be sent to ~~eDartGenContacts@pjm.com~~ edartgosurvey@pjm.com

2.2 Transfers of a Generation Facility and Name Changes of Generation Owners and Project Developers

2.2.1 Transfers of a Generation Facility

Each Project Developer (for a new generation facility or an existing generation facility) and Generation Owner (collectively referred to herein as "Generation Owner") seeking to, directly or indirectly, transfer all or part of its ownership interests in its generation facility must notify PJM and initiate the processes as set forth herein. This provision applies to an asset transfer of a generation facility, the transfer of an entity that owns or controls a generation facility (which shall mean 10% or more of voting interest of the entity), and to upstream transfers of ownership interests (10% or more voting interests) in such an entity (collectively referred to herein as "Change-in-ownership Transactions"). These requirements apply to upstream transfer of ownership because service agreements an ancillary documentation associated with the entity owning the generation facility often contain information relating to the holding company including contact persons and addresses. In addition, because of various obligations under its Tariff, PJM must maintain accurate agreements and clarity of ownership, including upstream ownership, of generation facilities. These requirements apply to a corporate reorganizations unless such corporate reorganization is governed by the blanket authorization for internal corporate reorganizations set forth in FERC's regulations promulgated pursuant to Section 203 of the Federal Power Act (18CFR 824b) and as such the transaction is not subject to review by FERC.

It is the obligation of such Generation Owners to comply with the terms and conditions of all applicable service agreements including those governing the interconnection of their generation to the PJM Transmission System and /or participation in the PJM's wholesale markets regarding any assignments, consents, updates or notices. The requirements set forth herein are in additions to and not in substitution of any contractual or PJM Tariff obligations.

One objective of PJM's review of a contemplated Change-in-ownership Transaction is to ensure that the correct legal entity is properly identified on all service agreements related to the generation facility and to ensure that such service agreements are updated promptly with the correct entity, name and contact information after the closing of the Change-in-ownership Transaction. PJM service agreements related to the generation facility may include construction service agreements, cost reasonability agreements,Generation Interconnection Agreements, Interconnection Service Agreements, transmission service agreements, Wholesale Market Participation Agreements and/or dynamic transfer agreements. PJM's objective is to be able to accomplish any necessary assignments or amendments to the service agreements that are necessary or appropriate to accomplish the Change-in-ownership Transaction so that those changes can be effective upon the closing of the transaction. PJM has a form of an agreement to amend and/or consent to assignment agreement on PJM's website. Any other updates to service agreements relating to the transaction (i.e., contact persons, addresses, etc.) must be

provided to PJM no later than ten (10) days following the closing of the Change-in-ownership Transaction.

Any Generation Owner involved in or aware of a Change-in-ownership Transaction involving a generation facility shall satisfy the requirements as stated below. PJM expects that the parties involved with the Change-in-ownership Transaction will work together to provide the required information to PJM. PJM may extend or waive any of these requirements if it determines that a Generation Owner's compliance is not commercially practical.

1. When an application for authorization of the Change-in-ownership Transaction involving a generation facility in the PJM Region is filed with the Federal Energy Regulatory Commission pursuant to Section 203 of the Federal Power Act, a copy of the publicly available application should be served promptly on the General Counsel of PJM and the General Counsel of IMM (Monitoring Analytics);
2. No later than ten (10) days after an application for authorization of the Change-in-ownership Transaction is filed with the Commission pursuant to Section 203 of the Federal Power Act, or if a Section 203 application is not required, then no later than ten (10) days after the binding transaction documents are executed (even if those documents contain conditions or contingencies), The Generation Owner shall use commercially reasonable efforts to provide to PJM's Member Relations Department the following supplemental information:
    a. Any service agreements relating to the generation facility including but not limited to any construction service agreement, cost responsibility agreement, Generation Interconnection Agreement , Interconnection Service Agreement (or pre-PJM interconnection agreement), Wholesale market Participation Agreement, and any other PJM service agreement involving the Generation Owner related to the subject generation facility;
    b. The facility's name, location, street address, points of interconnection, maximum facility output, name(s) of the facility owner(s) (i.e., the legal entities that own the facility), PJM Market's Gateway Unit ID, PJM-assigned commercial name(s) developed in accordance with Section 1.2 of this Manual, if applicable;
    c. A brief description of the transaction including the names of the parties to the transaction;
    d. The marketing entity that is currently responsible for the generation facility and Declaration of Authority to such marketing entity; and
    e. If as a result of the transfer, Generation Owner will become affiliated with or controlled by a different PJM Member, the name of such PJM Member and simplified organization chart illustrating the expected relationship between: (1) the Generation Owner; and (2) such PJM Member.

3. Prior to the three (3) business days of the requested effective date of the transfer within the PJM systems, which can be different than the closing of the Change-in-ownership Transaction, the Generation owner shall provide the PJM Member Relations Department with an executed PJM-accepted Declaration of Authority for the Generating Facility authorizing a new third-party marketer to interface with PJM, if applicable; and
4. In the event of a direct sale or transfer of a generation facility, the Generation Owner shall, provide the PJM Member Relations Department with the documents or information specified below no later than five (5) business days prior to the closing of the Change-in-ownership Transaction.
    a. A letter to the currently-effective President and CEO of PJM Interconnection, L.L.C. on the entity's letterhead identifying the new company name and the anticipated closing date;
    b. A certificate of good standing from the acquiring entity's state of organization;
    c. A listing of the current officers of the acquiring entity; and
    d. An IRS Form W9 for the acquiring entity

2.2.2 Generation Owner or Project Developer Name and/or contact information Changes

A Generation owner that changes its corporate name and/or contact information shall notify PJM and upon receipt from PJM, execute an agreement to amend to updates its PJM service agreements, and provide a provide PJM with the following documents within 30 days of the change: (i) a letter to the currently-effective President and CEO of PJM Interconnection, L.L.C. on the company letterhead giving the new company name and the requested effective date of the change; (ii) a copy of the name change filing certified by the Secretary of State form the state of organization; (iii) an updated affiliate disclosure form reflecting the new company name; and (iv) an updated IRS Form W9 reflecting the new company name. The documents should be mailed to:

PJM

Attn:Membership Process & Services

2750 Monroe Boulevard

Audubon, PA 19403

2.2.3 Transfer of Certain Member Rights and Obligations Pertaining to a Generator to Other Members

Section 5.7 pertains to a Member's transfer of specific rights or obligations associated with its generation facility. A member may transfer specific rights or obligations associated with its generation facility only to extent permissible under the applicable service agreements, the PJM Tariff, other PJM governing documents, and manuals.

2.3 Generator Market Remodel

A Generator Market Remodel is the process where a Generation Owner or designated agent requests to have a single unit split out and modeled as two or more units or multiple units aggregated and modeled as one unit in PJM Markets. Refer to section 2.4 of this manual regarding requirements for eDART modeling.

To initiate the remodeling process, the Generation Owner or designated agent should contact the Client Management Team at PJM (CMProjectTeam@pjm.com). A PJM Client Manager will then send the Generation Owner(s) a Generation Market Remodel Template to be filled out and returned. The PJM Client Manager will manage the coordination between the Generation Owner(s) and appropriate PJM departments from the initiation of the request through the go live date of the remodel.

Market remodel timeline from initiation of the remodel request to the go-live date of the remodel is subject to certain exceptions on a case-by-case basis. When the request to remodel is submitted, the PJM Client Manager will provide a high--level timeline to the Generation Owner(s) which is dependent on the number of remodel requests in the queue. If the remodel requires an EMS model change, the expected duration is 4-6 months based on when the remodel change can be modeled in the EMS. If an EMS model change is not required, the process typically takes 2-3 months.

2.4 eDART Modeling

In order to ensure operational model consistency, non-black start generators shall be modeled in eDART consistent with the PJM EMS model. All black start generators shall be modeled individually in eDART and EMS including those that are part of a combined cycle plant.

Section 3: Control Center Requirements

Welcome to the *Control Center Requirements* section of the *PJM Manual for Generator Operational Requirements*. In this section you will find the following information:

- A description of the generation control center categories within PJM (see "*PJM Control Center Categories for Generating Entities*").
- A summary of control center requirements for generation owners (see "*Control Center Requirements for Generating Entities*").
- Interpersonal communication requirements for generation owners (see "*Interpersonal Communication Requirements for Generating Entities*").

This section presents a summarized version of the requirements for control centers established by generating entities for reliable operation in the PJM Balancing Authority. For more details, please refer to the *PJM Manual M-1 for Control Center and Data Exchange Requirements*.

3.1 PJM Control Center Categories for Generating Entities

PJM Members may be involved with transmission operations, generation operations, load service operations, and/or PJM Energy Market participation. For each of these operations, a different control center category has been designated.

For generation operations, the control center category is the Market Operations Center (MOC). An entity that participates in the PJM Operating Agreement and assists PJM in operating and controlling generation within the PJM RTO establishes a Market Operations Center (MOC) to facilitate its responsibilities regarding the security of the PJM RTO

For each of the services listed below, data is exchanged between the MOC, PJM and one or more of the other PJM Member control center categories – Transmission Owners (TOs), Load Service Centers (LSCs), and Marketing Centers, corresponding to Regional Transmission Owners, Load Serving Entities and Marketers.

- Generation Scheduling Services
- EMS Services
- Historical EMS Data Services
- Energy Transaction Services
- Long-term Planning Services
- PJM Administration Services

More information about PJM Control Center Categories and PJM Member Data Exchange can be found in M-01: Control Center and Data Exchange Requirements, Sections 2.1 and 2.2.

3.2 Control Center Requirements for Generating Entities

This section discusses the control center requirements for the PJM generating entities, which are similar to those of other PJM Members. For efficient and reliable participation in the PJM RTO, the following requirements for the Members' control center computer systems, communications, facilities, and staffing have been established.

3.2.1 Computer System Requirements

The generation owner's MOC serves as the primary operating link to the PJM control center and includes computer system hardware and software that supports their responsibilities under the Agreement. The list below summarizes the computer system requirements for all PJM member control center categories including the MOC.

The control center is required to:

- Achieve a 99.95% availability level for its computer hardware and software
- Prepare and implement a backup and archiving plan
- Follow PJM computer system security procedures
- Follow PJM system maintenance procedures
- Ensure expansion capability of its computer system

3.2.2 Communications Requirements

Telecommunications (voice and data) circuits, which must be reliable and secure, should be tested regularly and/or monitored online, with special attention given to emergency channels. The communication channels that are in this category are listed in M-01: Control Center and Data Exchange Requirements, Section 2.4.

3.2.3 Facilities Requirements

The MOC facility considerations include the physical space housing operations staff and, if appropriate, a computer room, communications room, and power supply area. The specific implementation of control center facilities considerations should be appropriate for the nature of the computer systems and communications equipment installed. The following list summarizes the facilities requirements for a generation owner.

The control center is required to:

- Provide an environment suitable for its equipment and personnel
- Ensure a stable and secure supply of AC power for its equipment
- Restrict access to its work area to avoid distractions
- Establish a protocol for information flow to control room personnel
- Install smoke and fire detection and protection equipment
- Comply with PJM backup procedures

More details on these requirements can be found in M-01: Control Center and Data Exchange Requirements Section 2.5.

3.2.4 Control Center Staffing Requirements

PJM Member MOCs should be staffed 24 hours a day, 7 days a week, with 100% availability of personnel who are trained for all normal and emergency situations that are anticipated. For details on control center staffing requirements, please refer to M-01: Control Center and Data Exchange Requirements, Section 2.6.

Manual-01, Control Center and Data Exchange Requirements, Attachment F: Overview and Requirements for Remote Operations of Market Operations Centers due to Exceptional Circumstances provides guidance on MOC operations in events such as any act of public enemy, war, insurrection, riot, fire, severe weather, natural disaster, flood, civil unrest, explosion, pandemic or other public health emergency.

Training courses for operations, technical staff and maintenance personnel should be conducted. The PJM Member Relations Department can provide assistance, as required, for training related to PJM operations. Refer to M-40: Training and Certification Requirements for additional information about training.

As of March 1, 2003, PJM requires all generation and transmission operators who operate on PJM systems to undergo the PJM Certification examination. Further details are provided in PJM Manual M-40 Training and Certification Requirements.

3.3 Interpersonal Communication Requirements for Generating Entities

This section summarizes the PJM requirements for Interpersonal Communication and Alternative Interpersonal Communication capabilities for control centers including the MOCs established by generating entities. Refer to M-01 for Control Center and Data Exchange Requirements, Section 4, Interpersonal Communications Capability for additional details and requirements.

3.3.1 Dispatch Voice and Facsimile Communications

The dispatch voice system provides high-priority Interpersonal Communication capability between PJM and various PJM Members, as required by NERC Standard COM-001. The dispatch voice system hardware consists of the All Call system, Ring Down circuits and manual dial circuits.

Communications via facsimile machines is another means of exchanging information between PJM operations, accounting, and other parties, including PJM Members.

Please refer to M-01: Control Center and Data Exchange Requirements, Section 4.1 for more details on different types of communication hardware.

3.3.2 Alternative and Interpersonal Communication Methods

The dispatch voice system is designed to provide voice communications during normal circumstances. In the event the PJM primary Interpersonal Communication methods fail, the following systems may provide alternative communication capabilities:

- Satellite Telephones
- Business Voice System
- Cellular Telephones

Please refer to M-01: Control Center and Data Exchange Requirements, Sections 4.2 and 4.3 for specific requirements for Alternative Interpersonal Communications.

Section 4: Data Exchange and Metering Requirements

Welcome to the *Data Exchange and Metering Requirements* section of the PJM Manual for *Generator Operational Requirements*. In this section you will find the following information:

- Description of Energy Management System (EMS) data exchange methodology and requirements. (See "*EMS Data Exchange*").
- Rules pertaining to generator metering. (See "*Data Exchange and Metering Requirements*").

4.1 EMS Data Exchange Requirements

4.1.1 EMS Communications for Real-Time Data Exchange

For more information on EMS communication systems, please refer to M-01: Control Center and Data Exchange Requirements, Section 3.2: EMS Data Exchange.

Through the EMS communication systems and protocols described in M-01: Control Center and Data Exchange Requirements, Section 3.2: EMS Data Exchange, the PJM Supervisory Control and Data Acquisition (SCADA) system allows bi-directional exchange of analog data, digital data, and, in some cases, accumulator data between small generators and the PJM EMS. In the PJM EMS, data may be processed immediately, stored in local historians, or forwarded to sub-systems like PJM Settlements.

A Voting Member (as defined in the Operating Agreement), for their generation assets as described in Exhibit 2~~3~~: Guidelines for Metering Installation, will receive one PJMnet connection. A Voting Member has the option to request that PJM provide, at the Voting Member's sole cost and expense, up to five additional PJMnet connections.

Sample Configurations

The wide variety of possible Members dictates that the system cannot be locked into a fixed configuration. Member size and type of installation (new or existing) determine the installation configuration and possible features.

Some of the possible configurations are shown below. All metering installations below accommodate one or more metering points. Please note that the following table is a guideline only. Specifics of the installation may dictate an alternate configuration.

		Metering Installation				
Connection Type	**Aggregate Generator Size**	**Intelligent Electronic Device**	**Data Model**	**Configuration**	**Monitoring Period**	**Protocol**
Jetstream	Very Small (<10 MW)	Data Concentrator	All data types available OR Collect MWh and MVARh only	Dedicated TCP/IP with encryption gateway over secure Internet.	varies	DNP 3.0
Jetstream	Small (10< MW<100)	Data Concentrator	All data types available	Dedicated TCP/IP with encryption gateway over secure Internet.	varies	DNP 3.0
PJMN*et*	Medium (100<= MW<500)	Data Concentrator	All data types available	Dedicated TCP/IP with single router to redundant PJMNet.	2 – 10 Second Periodic	DNP 3.0 or ICCP
PJMN*et*	Large (MW>=500)	Data Concentrator, SCADA, EMS or GMS	All data types available	Dedicated TCP/IP with dual routers to redundant PJMNet –Single Local Area Network	2 – 10 Second Periodic	DNP 3.0 or ICCP

Exhibit 2: Guidelines for Metering Installation

Situation	Real-Time & Billing Metering	Operational Changes Sent via	Generator Bidding
Minimum Changes/ Minimum Cost	Via Host Utility; MWh entered in **Power Meter** for PJM billing.	Host Utility.	Via Host Utility
<10 MW injection to grid or unit runs infrequently.	RTU at plant, single DNP network connection with encryption gateway.	Internet, through **Markets Gateway**	Internet, through **Markets Gateway**
10< MW <100 injection to grid; unit runs continuously.	RTU at plant, single DNP network connection with encryption gateway.	Internet, through **Markets Gateway**	Internet, through **Markets Gateway**
100<= MW <500 injection to grid; unit runs continuously.	RTU at plant, redundant network connection, single router.	Internet, through **Markets Gateway**	Internet, through **Markets Gateway**
=>500 MW injection to grid; unit runs continuously	RTU at plant or ICCP via SCADA system, redundant ICCP or DNP network connection, dual routers.	Internet, through **Markets Gateway**	Internet, through **Markets Gateway**
Control Center for Multiple Units	Install metering and use SCADA System; redundant ICCP network connection to PJM, dual routers.	Internet, through **Markets Gateway**	Internet, through **Markets Gateway** and **PJM*net***

Exhibit 3: Equipment Types for Data Exchange with PJM

The following exhibit displays a typical multi-unit metering and data flow configuration.

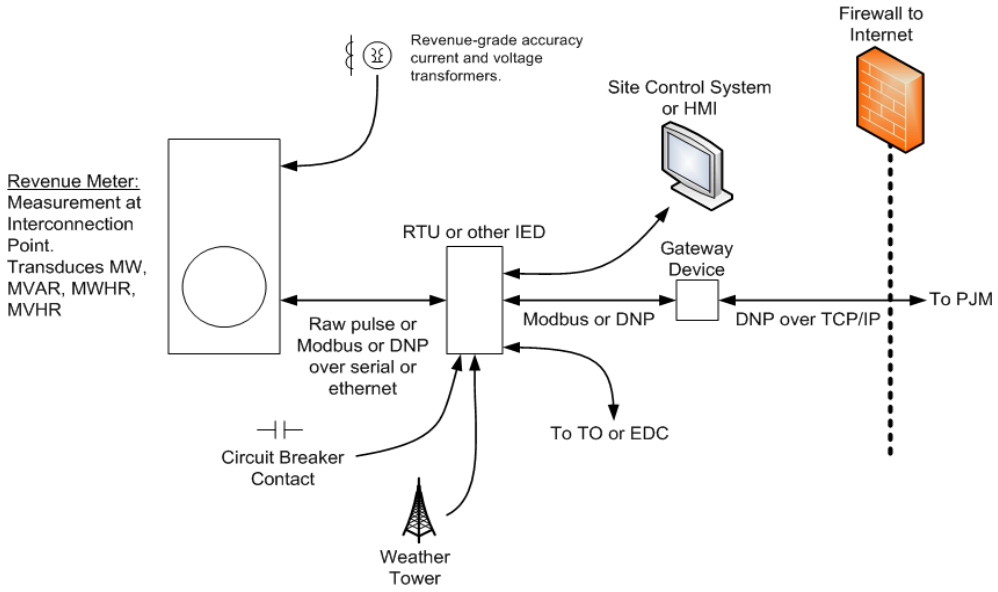

Exhibit 4: Typical Internet DNP Configuration

4.1.2 Real-time Data Exchange Requirements

M-01: Control Center and Data Exchange Requirements, Section 3.2.3 outlines the types of EMS data exchanged cyclically between PJM and PJM Members, as well as the accuracy requirements for such data. The following exhibit summarizes the data requirements and exchange rates for the cyclic and by exception data exchanged between PJM EMS and PJM Members' EMS systems as it relates to generating entities.

Data	Exchange Rates
From PJM Members to PJM	
Data needed for PJM Control Programs (AGC tie-line MW, TREG, CREG , LOADBP, Locally Sampled Frequencies) This includes Generation MW telemetry for all units participating in the PJM regulation market	Fast Scan Rate (2 seconds)
Data needed for monitoring generation (Generation MW/MVAR Telemetry)	Slow Scan Rate (10 seconds)
Data needed for monitoring transmission	Slow Scan Rate (10 seconds)

Data	Exchange Rates
(Line/Transformer Flows, Voltages)	
Breaker, disconnect, and line status changes	By Exception (on event)
From PJM to PJM Member	
AGC Regulation Signals	Fast Scan Rate (2 seconds)
AGC Individual Unit MW set Points	Slow Scan Rate (10 seconds)
Dispatch control values	Slow Scan Rate (10 seconds)
Generation MW/MVAR Telemetry	Slow Scan Rate (10 seconds)

Exhibit 5: Summary of EMS Data Requirements and Exchange Rates

Each PJM Member is responsible for determining data quality indicators for all data transmitted to PJM. Both failed individual values and any value calculated using a failed point must be flagged. Please refer to M-01: Control Center and Data Exchange Requirements, Section 2.3.6: Data Integrity for further requirements on quality codes.

When a point fails for an extended period, a manual update of the point's value might be necessary once every thirty minutes to keep the data as accurate as possible. Requirements on data exchange during EMS datalink and device outages are outlined in M-01: Control Center and Data Exchange Requirements, Section 3.2.4.

In addition, the following exhibit shows PJM precision requirements for real-time and revenue metering information. Refer to M-01: Control Center and Data Exchange Requirements for additional details.

Real Time Instantaneous Data Sent To PJM	
Frequency	1/1000th of HZ (i.e. 60.001 Hz)
Voltage	1/10th of kV (i.e. 69.1 kV)
Real Power MW	1 MW integer (i.e. 52 MW) required, but PJM will accept greater precision if available
Reactive Power MVAR	1 MVAR integer (i.e. 42 MVAR) required, but PJM will accept greater precision if available

Real Time Instantaneous Data Sent To PJM	
Current State of Charge (Energy Storage Resource Model Participants and Hybrid Resources Only)	MWh remaining
Mixed Technology Facilities Only - Real Power MW from Each Component Technology (e.g., Solar MW and Battery MW)	1 MW integer (i.e. 52 MW) required, but PJM will accept greater precision if available
Co-Located Resources Only - Reactive Power MVAR from each Co-Located Resource	1 MVAR integer (i.e. 42 MVAR) required, but PJM will accept greater precision if available

Real Time Instantaneous Data Sent From PJM	
Individual Unit MW base point from Security Constrained Economic Dispatch (SCED)	1/10th of MW (i.e. 323.1 MW)
Regulation Signal (AR)	1 MW integer, + or – (i.e. 10 MW) but PJM will send smaller signals to certain sites such as renewable resources, etc.

Revenue Data Sent To PJM	
MWh Delivered and Received	1/1000th of MWh (i.e. 20.001 MWh)
MVARh Delivered and Received	1/1000th of MVARh (i.e. 15.002 MVARh)

Exhibit 6: PJM Real-Time and Revenue Data Precision Requirements

4.1.3 EMS Model

New Generating Facilities of more than 10 MW or any new Capacity Resource intending to set real-time LMP must be explicitly modeled in the PJM EMS network model. The EMS network model is updated as described in PJM Manual 3A, Energy Management System (EMS) Model Updates and Quality Assurance (QA).

4.1.4 PJM EMS Communication Protocols

All new Control Center to Control Center links will be implemented using the inter-control Center Communications (ICCP) standard. ICCP is a comprehensive, international standard for real-time data exchange within the electric power utility industry. It is intended to support inter-utility, real-time data exchange critical to the operations of interconnected systems.

4.2 Data Management and Metering Requirements

4.2.1 Data Management and Security

Each Generator shall supply the necessary planning and operating data required to accurately model, schedule, and monitor the PJM system. Specific data requirements for power system applications, production cost and reliability assessment are located in M-14B: PJM Regional Transmission Planning Process, Attachment H: Power System Modeling Data. This data must include, but is not limited to:

- Expected unit operations and desired market service/segment.
- Stability study data.
- Step-up transformer data (impedance and tap setting).
- Relay settings and generator protection package.
- Generator operating curves and associated test data (reactive/saturation).
- Special operating restrictions (including environmental).
- Identification of equipment ownership and maintenance responsibilities.
- Test data for metering calibration, backup communications, and relays.
- Any other data required to certify a generator as eligible to participate in a specific market segment or service.

It is required that data be sent to PJM automatically. In the event that the data is not automatically received by PJM, the Generation Owner shall electronically or verbally communicate the required data with PJM at intervals specified by PJM. The Generation Owner must correct any problems associated with the failure of data-transmission equipment within a reasonable time. More details on data exchange during EMS datalink and device outages can be found in M-01: Control Center and Data Exchange Requirements, Section 3.2.4.

The Generator and Transmission Owner shall promptly exchange all information relating to all conditions which affect (or could affect) the operations of any facility reporting data.

The Generator shall communicate the outage of any data communication equipment connecting the facility to the PJM system in accordance with the following requirements:

- Each facility will be assigned to one of the PJM Transmission Owners as its primary contact, unless arrangements are made to communicate information directly to PJM. The assignment is based upon the voltage level of the connection to the Transmission System and the geographic location of the facility.
- All planned and maintenance outages of data communications equipment requiring the involvement of PJM personnel must be requested by the Generator. All information must be in a format defined by PJM. Refer to M-01, Control Center and Data Exchange Requirements, Section 3.8: Planning, Coordination, and Notification of System Changes and Events.

- Advance notification of planned and maintenance outages must meet the requirements defined in the PJM Manual for Pre-Scheduling Operations (M-10).

Additional specific data requirements are defined in other sections of this manual. All records must be retained in accordance with NERC, FERC and PJM data retention requirements. All back-up interpersonal and data communication plans and test procedures must be documented and provided to PJM.

4.2.2 Metering Plan

In order to establish a metering plan for new generation, a PJM Client manager is assigned. A kick-off meeting between the PJM Member Relations and the Generation Owner will be held to discuss the following issues:

- Project schedule including testing/commercial dates
- Options for providing real-time and revenue data
- Business plan for the unit(s) - The new participant is required to apply for the necessary PJM Tools accounts based on the individual business plan.
- PJM metering requirements - To satisfy these requirements, all generators connecting to the PJM system are required to install and operate metering and related equipment capable of recording and transmitting all voice and data communications. Specific data metering requirements depend on the size and business plan of the generator connecting to the PJM system.

Several factors determine the real-time telemetry to PJM requirements for a generator. The following table shows the criteria for which a generator may be required to provide real-time telemetry to PJM. If one or more of the criteria are true for that generator, then telemetry is required.

Criteria	Real-Time Telemetry Requirements
Generators participating in the PJM market as capacity resources	Real and reactive power
Generators 10 MW (Maximum Facility Output) or larger	Real and reactive power
Generators greater than 1 MW (Maximum Facility Output) and connected at a bus operating at 50 kV or greater	Real and reactive power
Solar parks 3 MW (Maximum Facility Output) or greater	Real and reactive power (see Section 12.2 for additional requirements)

Criteria	Real-Time Telemetry Requirements
Distributed generators (such as, the treatment of many units dispersed over a wide area as one aggregated unit) modeled less than 10 MW (Maximum Facility Output)	Real and reactive data at the BES injection point of accuracy within 10% of hourly MWh settlements data (revenue meter or accumulator data)
Public Distribution Microgrid Generators	Real and reactive power Status of Public Distribution Microgrid (connected to or disconnected from grid)
Generators that will also participate as PJM demand response resources when they will reduce load and have PJM-approved interconnection rights to inject power.	Real and reactive data, based on the Generator criteria in this table, at the point of interconnection and real and reactive power for the generators.
Wind farms	Real and reactive power (see Section 8.2 for additional requirements)

Generators not meeting any of the criteria above are generally not required to supply real-time telemetry to PJM. However, PJM may require real-time telemetry from any generator based on specific topology, network security, operations or market needs. Generators that are not required to supply real-time (two-second scan) metering will not be eligible to set real-time LMP. Revenue-related information is necessary for very small units. This information can be obtained from the local utility or manually read by the customer and supplied to PJM via Power Meter. If desired, a direct connection to PJM can be established.

Generators that are required to supply real-time and revenue information can supply this through the local utility's connection to PJM, or if desired, via a direct connection from the generator to PJM. Real-time information will be collected at a two- ten second data rate, and revenue information will be collected hourly. The revenue information represents the accumulated energy for the previous hour.

The required revenue information is necessary to satisfy the needs of PJM's Market Settlements program. The real-time information is required for PJM's Energy Management Applications (State Estimator, Contingency ~~Security~~ Analysis, etc.).

4.2.3 Metering for Individual Generators

PJM does not require Generation Owners to directly connect to PJM, but leaves this as an option if it enhances the owner's ability to participate in PJM markets and functions. A generation owner has a number of options with respect to information acquisition and transmission.

At the most basic level, a Generation Owner can negotiate data transmission to and from PJM through the local utility or transmission facilities owner. This allows the Generation Owner the flexibility to use already proven and acceptable methods of data transfer to minimize initial start-up costs and procedures, while meeting all of the current requirements for providing data to PJM. This basic communication can be supplemented with the use of the Internet-based PJM Tools such as inSchedule and Data Viewer, further expanding the data transfer capabilities between the customer and PJM without a direct connection to PJM.

A Generation Owner may decide that direct connection to PJM makes the best business sense, so facilities have been provided to make that connection as simple and cost effective as possible. The Generation Owner that decides to connect directly to PJM will be required to meet requirements determined by the net MW produced and the markets in which the Generation Owner decides to participate.

Additionally, information about PJM's operational status and other types of non- market sensitive data can be directly communicated through these same facilities. This type of communication is not required but is provided by PJM as a value-added service to enhance participation in PJM markets.

PJM’s data requirements are described in two categories: real-time information and non-real time information. Either or both of these types of data can be directly communicated to PJM depending on the customer requirements and operating agreement with the local utility.

Real-Time Data

Real-time or instantaneous information is defined as data required by PJM that determines system security and stability as well as congestion and LMP. The minimum data model for real-time data transmission requires:

- Instantaneous Net (+/-) MW for each unit, measured on the low-side of generator step-up transformer
- Instantaneous Net (+/-) MVAR for each unit, measured on the low-side of generator step-up transformer
- Distributed generators modeled at less than 10MW must provide Instantaneous Net (+/-) MW and MVAR at aggregation point (BES injection point) based on an agreed upon algorithm.
- Generators that will also participate as PJM demand response resources and that have PJM approved interconnection rights to inject power must provide Instantaneous Net (+/-) MW and MVAR at the point of interconnection and Instantaneous Net (+/-) MW and MVAR, measured on the low-side of generator step-up transformer at a point where it does not include associated load served by the generator.

Mixed Technology Facilities must meet the following real-time data requirements:

1. Instantaneous net (+/-) MW and MVAR for the entire Mixed Technology Facility, measured at the point of interconnection. Refer to points “Sh” and/or “Sl” in Exhibit 7 below. Data may need to be measured and provided from either the high side or low side of the generator step-up transformer, or both, as described immediately below.
    a. For a Mixed Technology Facility that is directly connected to PJM transmission and has a Maximum Facility Output of 75 MW or greater, or otherwise is a BES generator:
        i. MW and MVAR must be measured at the high-side of the generator step-up transformer (point Sh).
        ii. When the generator step-up transformer is modeled in the PJM EMS (e.g., for units 20 MW and greater), MW and MVAR must also be measured at the low-side of the generator step-up transformer (point Sl), or other low-side location that measures all generator units.
    b. For a Mixed Technology Facility that is not directly connected to PJM transmission, or that has a Maximum Facility Output under 75 MW and is not otherwise a BES generator:
        i. When the generator step-up transformer is not modeled (e.g., for certain units under 20 MW), MW and MVAR data must correspond to utility voltage at the point of connection. This PJM requirement can be met with direct measurements at that voltage (point Sh), or instead with measurements at lower voltage that are adjusted for losses (measured at point Sl, but adjusted for losses). The interconnecting utility may have other requirements.
        ii. When the generator step-up transformer is modeled (e.g., for units 20 MW and greater), MW and MVAR data must be measured at the low-side of the GSU, without adjustment for losses. The interconnecting utility may have other requirements.
2. Instantaneous (+/-) MW for each technology component of a Mixed Technology Facility, regardless of whether the facility participates in markets as a Hybrid Resource or many Co-Located Resources. See “S1” and “S2” in Exhibit 7 below. The accuracy of the devices for measuring this component level MW output shall meet the requirements of Manual 01 for general telemetry, as specified in Section 5.2.6 (or other section of that manual as may be applicable).
3. Instantaneous (+/-) MVAR for each technology component of a Mixed Technology Facility that participates in markets as a Co-Located Resource (point S1 and S2). The accuracy of the devices for measuring this component level MW output shall meet the requirements of Manual 01 for general telemetry, as specified in Section 5.2.6 (or other section of that manual as may be applicable).

Additional transmitted data may include bus voltages, circuit breaker status, and other data.

Account Metering

Non-real-time or revenue information is needed by PJM's applications and systems that determine Grid Accounting and Energy Interchange such as Power Meter. The minimum data-model for revenue data transmission requires:

- Hourly Compensated MWh delivered for each unit.
- Hourly Compensated MWh received for each unit.
- Hourly Compensated MVARh delivered for each unit (not currently required).
- Hourly Compensated MVARh received for each unit (not currently required).

Note:
The MVARh revenue information will be considered a requirement in the event that PJM implements a Reactive Power Market.

A Mixed Technology Facility shall have metering that measures non-real-time or revenue information corresponding to the Point of Interconnection (shown as “M” in Exhibit 7 below). This metering shall meet the accuracy requirements for primary billing metering systems specified in Manual 01 section 5.3.2 (or other section of that manual as may be applicable). A Mixed Technology Facility participating in markets as multiple Co-Located Resources requires non-real-time MWh revenue information for each Co-Located Resource. Such MWh quantities may be calculated by apportioning the MWh measured for the entire Mixed Technology Facility across the Co-Located Resources. Such apportionment may be achieved pro rata based on the real-time MW telemetry for each Co-Located Resource.

Exhibit 7 below illustrates a general example of a Mixed Technology Facility with combinations of inverter-based (including storage) or non-inverter-based resources, each participating separately in markets as a Co-Located Resource. In this example, all of the energy measured for the Mixed Technology Facility at “M” across an interval (e.g., 5 minutes) is split between the combination of resources pro rata according to the power measured at S1 (which measures all of the R1 power flows) and at S2 (which measures all of the R2 power flows) integrated over the interval.

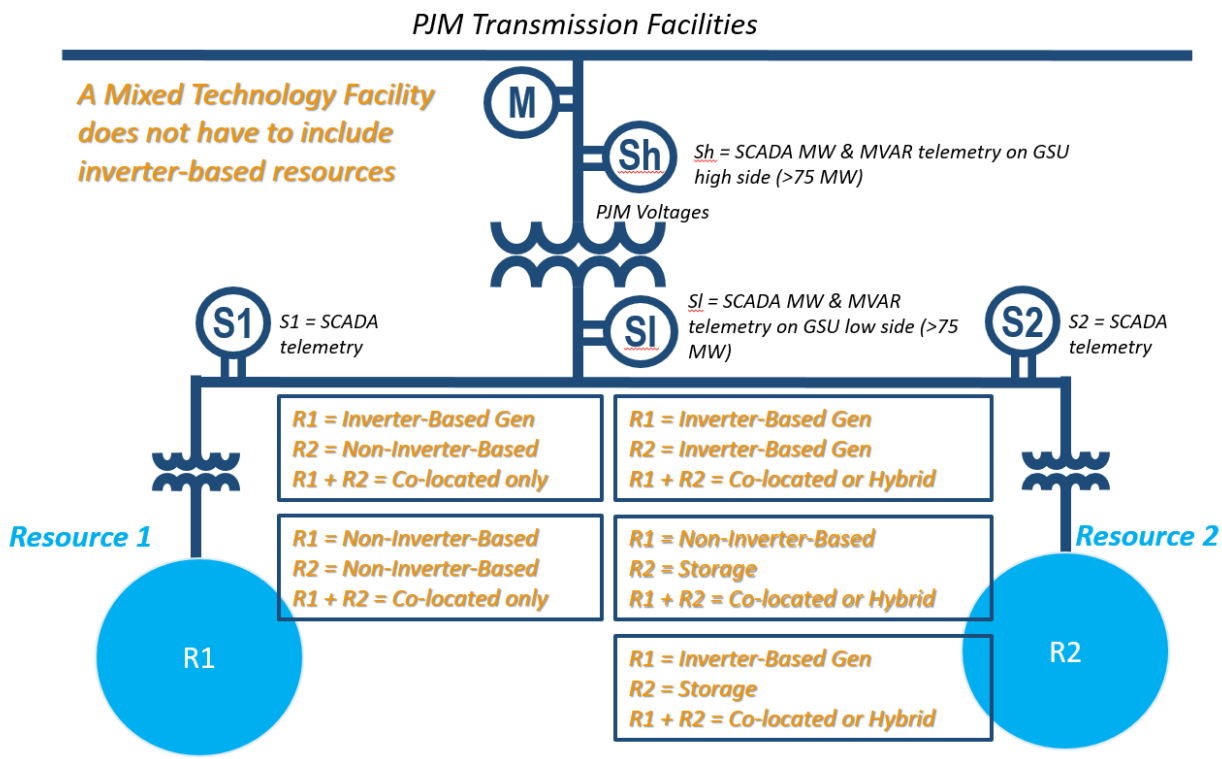

Exhibit 7: Metering requirements example for a Mixed Technology Facility

An example of real-time data and account metering requirements for a Mixed Technology Facility, including measurement points. More or fewer measurement points may be required depending on circumstances; see Mixed Technology Facility business rules immediately above for more detail.

As illustrated in Exhibit 8 below, some distributed Energy Storage Resources are capable of directly serving end-use load. In order to ensure adequate visibility for PJM and to properly quantify Direct Charging Energy as defined in the PJM Tariff, additional metering requirements apply to such resources.

For Case 1 as shown in Exhibit 8 below—the additional metering requirements of this paragraph apply to Storage Resources that meet the following criteria:

1. under normal operating conditions, the Energy Storage Resource is directly connected to the grid, but is not directly connected to any ordinary end-use load that is not Station Power;
2. under outage conditions (that is, when the grid is not available), the Energy Storage Resource is capable of using switching to directly connect to an end-use load that is either onsite or adjacent to the Energy Storage Resource in order to provide energy directly to the end-use load.

Energy Storage Resources that meet these criteria, and that are not co-located with any other generation facilities, shall provide a device for measurement of MWh located on the normally-open facility connecting the ESR to the end-use load, as indicated by meter “M4” in Exhibit 8 (unless otherwise mutually agreed by PJM, the Electric Distribution Company, and the Energy Storage Resource owner).

Energy Storage Resources that meet the above criteria, and that are co-located with any other generation facilities, shall provide a device for measurement of MWh located directly on the output terminals of the other generation facility, as indicated by meter “M2” in Exhibit 8, and on the normally-open facility connecting the ESR to the end-use load, as indicated by meter “M4” in Exhibit 8 (unless otherwise mutually agreed by PJM, the Electric Distribution Company, and the Energy Storage Resource owner).

- This measurement device shall meet all PJM settlements metering requirements in Manual 01.
- In order to properly quantify wholesale sales of Direct Charging Energy and Load Serving Charging Energy, this device shall be capable of measuring and reporting to PJM Power Meter during outage conditions.

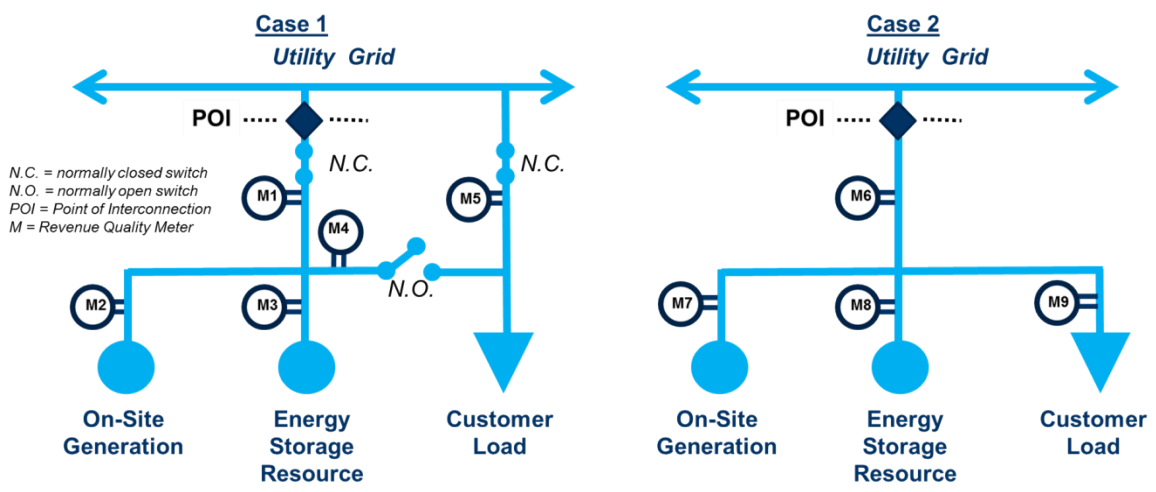

Exhibit 8: Energy Storage Resource Metering Example

For Case 2 as shown in Exhibit 8 above—Energy Storage Resources that are co-located with end use load that is not Station Power shall provide a device for measurement of MWh located directly on the Energy Storage Resource terminals, as indicated by meter “M8” in Exhibit 8 above (unless otherwise mutually agreed by PJM, the Electric Distribution Company, and the Energy Storage Resource owner). If other on-site generation is also present, a device for measurement of MWh located directly on the terminals of the other on-site generation shall be provided. The measurement device shall meet all PJM settlements metering requirements in Manual 01.

Additional information on PJM Metering requirements may be found in Sections 3 and 5 of *PJM Manual M-01,* Control *Center and Data Exchange Requirements*.

4.3 Synchrophasor Communication System

The PJM Synchrophasor Communication system allows PJM to collect and manage data from phasor measurement devices unit(s) (PMU) which include the standalone phasor measurement units (PMUs) device, or Relays and Digital Fault Recorders (DFRs) with phasor measurement capabilities from individual generators or Market Operation Centers (MOC). Synchrophasor measurement devices (PMUs) are required at all new generator interconnections 100MW or larger that entered PJM's interconnection queue on or after October 1, 2012. It shall also include the communication system capable of carrying the phasor measurement data to a phasor data concentrator (PDC), and then transport the information continuously to PJM; as well as store the data locally for a minimum period of 30 days.

A Phasor Data Concentrator (PDC) shall be located at either the Member's generation site or MOC, and, after collecting data from the phasor measurement devices PMUs, communicate with PJM's Synchrophasor system using C37.118 data transfer protocol.

4.3.1 Phasor Measurement Device Unit Requirements

A phasor measurement device PMU is a device which measures the electrical wave forms on the electricity grid in real-time, using a common time source for synchronization.

- The performance of phasor measurement device PMU must comply with the current revisions of standards such as IEEE C37.118. The protection (P) performance class PMU is preferred.
- The phasor measurement device PMU shall have the capability to calculate sequence values for voltage and current Phasor data; as well as to provide the sequence synchrophasor values to a PDC at the minimum rate of 30 scans per second. (For all calculation purposes Phase A shall be used as the reference phase.)
- The phasor measurement device PMU shall have GPS (UTC) synchronization function either through an internal or external GPS receiver. All data recorded shall be in the Coordinate Universal Time (UTC).
- The phasor measurement device PMU shall be able to automatically switch to local clock in the event of the loss of GPS signal, and resynchronize automatically when GPS signal is available.
- The phasor measurement device PMU data stream shall indicate whether it is using GPS clock or local clock. NOTE: Default data stream should be synced to the GPS clock, with local clock serving as a backup.
- Accuracy and resolution of time synchronization shall be equal or under 1 micro second to UTC. The phasor measurement device PMU should be able to locally store collected or calculated data at the minimum rate of 30 frames per second.

- The phasor measurement device PMU shall be installed on the Customer Facility side of the generator step-up transformer (low side) unless it is a non-synchronous generation facility, in which case the device shall be installed on the Customer Facility side of the Point of Interconnection (POI).

4.3.2 Phasor Data Concentrator (PDC) Requirements

The PDC at the generation station or the MOC (GO PDC) is the central point of collection, management, storage, and distribution of PMU data for authorized real-time and non-real time uses.

- The performance of the GO PDC should comply with the current revisions of standards such as IEEE C37.118.
- The GO PDC shall be able to consolidate and synchronize data from all connected PMUs before sending it to PJM; including unaligned data.
- The GO PDC shall have capability of assigning positive sequence reference to any phase (rotate it by 120 or 240 degrees on per signal basis).
- All data streaming from the GO PDC to PJM PDC shall be in compliance with IEEE C37.118 communication standards.
- The GO PDC should have the capability to down sample PMU signal before transmitting it to PJM PDC and to configure the down sampling rate.
- For packets arriving later than expected time, the GO PDC should flag such packets and store their UTC arrival time.
- The GO PDC should be able to locally store all incoming data at the minimum rate of 30 frames per second for minimum two weeks.
- The GO PDC should be able to retrieve and provide locally stored data per PJM's request.
- The GO PDC should have a clock that is synchronized to UTC. It is recommended that this clock be an external GPS clock. Resolution and accuracy of time synchronization at Substation PDC should be equal or under 1 micro second to UTC.

4.3.3 Network Requirements

A high-speed real-time data acquisition network is required to simultaneously transfer the PMU data to PJM Valley Forge and Milford control centers. This telecommunications network is independent of the existing SCADA network operated for PJM's EMS at its control centers. End-to-end (GO PMU to PJM PDC) latency should be less than or equal to 100 milliseconds. The GOs data acquisition, processing and communications systems should be designed to achieve the 100 millisecond Latency limit. In most cases, transmitting phasor data with SCADA (RTU and ICCP) data together is permitted over the same PJMNet Connection designated for the Generation Owner.

4.3.4 Data Exchange and Management Requirements

PJM maintains configuration information for each phasor measurement device PMU and PDC connected to the Synchrophasor system. This configuration information is used to accurately interpret the data collected from the generators. The generator should contact the PJM SynchroPhasor Support Team PJMSynchroPhasorSupport@pjm.com to configure their PMU and PDCs. The PJM SynchroPhasor Support Team will assign a block of NERC-assigned five-Digit ID Codes for phasor measurement devices and coordinate the data path and required signals for each PMU.

Generators interconnected with and synchronized to the transmission system must provide PJM all necessary and requested information through PJM Synchrophasor system, to assure that the electrical system can be operated in a safe and reliable manner.

This data includes, but is not limited to:

- Generator terminal voltage and voltage phase angle (for wind generating plants, measurements at POI are acceptable)
- Generator terminal current and current phase angle (for wind generating plants measurements at POI are acceptable)
- Frequency and rate of change of frequency (ROCOF)

All data items, regardless of type, are collected and disseminated at a frequency of 30 frames per second and should be sent to PJM with associated data quality codes in compliance with IEEE C37.118 communication standards. (See 4.3.1 Phasor Measurement Device Unit Requirements)

The Generation Owner will report to PJM the outage of any data communication equipment connecting the facility to PJM system to the following email address: phasoroutage@pjm.com Please reference M01 section 3.3.2 , or OATT Section VI, Attachment O, Appendix 2, Section 8.5.2 for more details.

Section 5: Participation in PJM Markets

Welcome to the *Participation in PJM Markets* section of the *PJM Manual for Generator Operational Requirements*. In this section you will find the following information:

- Description of marketing options available to Generation Owners(see "*Marketing Options*").
- Description of required/mandatory services (see "*Ancillary Services*").
- Description of PJM marketing tools that are currently available (see "*Marketing Tools*").
- Description of the PJM two-settlement system (see "*Description of the Two-Settlement System*").
- Role of Generation in the PJM pre-scheduling and scheduling processes (see "*Pre-Scheduling and Scheduling*").
- Description of the resource commitment process (see "*Resource Commitment*").

5.1 Marketing Options

There are several marketing options available to Generation Owners in the PJM Interconnection, L.L.C. (PJM) Balancing Authority, but not every generating unit qualifies to participate in every PJM market. The marketing options available to generation owners depend on the physical characteristics of the unit(s) as well as the business philosophy of each owner. Additional information on all of the PJM markets may be found at the heading "Markets & Operations" on the PJM web site.

5.1.1 PJM Wholesale Energy Market

The PJM wholesale energy market includes both day-ahead and real-time markets.

- In the day-ahead market, Locational Marginal Prices (LMPs) are calculated for each hour of the next operating day based on generation offers, demand bids, and bilateral transaction schedules submitted in advance. The next-day schedule is developed using least-cost, security-constrained resource commitment and security-constrained economic dispatch programs.
- During the operating day, 5 minute and hourly clearing prices are determined by the actual system operations security-constrained economic dispatch in the real time market.
- For more information about the PJM Wholesale Energy Market see PJM Manual M-11, Energy & Ancillary Service Market Operations.

5.1.2 PJM Regulation Market

The PJM Regulation Market provides PJM participants with a market-based system for purchase and sale of the Regulation ancillary service, which provides short-term load balancing capability to the system.

Generators may choose to participate in the PJM Regulation Market. Qualification for this program requires each participating resource to achieve specified performance standards and to be equipped with Automatic Generation Control (AGC). Please refer to PJM Manual M-11, Energy & Ancillary Services Market Operations, Section 3 and PJM Manual M-12, Balancing Operations, Section 4 for more information.

For more details on regulating unit eligibility and the regulation market business rules, please refer to the PJM Manual M-11, Energy & Ancillary Services Market Operations.

5.1.3 PJM Reserve Markets

The PJM Reserve Markets provide PJM participants with a market-based system for purchase and sale of Primary Reserves (which include the Synchronized Reserve and Non-Synchronized Reserve) Synchronized Reserve, and 30-Minute Reserves in the Day-ahead and Real-time markets. Please refer to PJM Manual M-11, Energy & Ancillary Services Market Operations, Section 4 for more information.

5.1.4 PJM Capacity Market

Refer to PJM Manual M-18, PJM Capacity Market for information related to this market.

5.2 Ancillary Services

The following ancillary services are provided by PJM in coordination with the generating entities and are required/mandatory services, calculated after-the-fact in the billing process.

5.2.1 Reactive Supply and Voltage Control from Generating Sources Service

In order to maintain transmission voltages on the Transmission Provider's transmission facilities within acceptable limits, generation facilities under the control of the Balancing Authority operator are operated to produce or absorb reactive power. Thus, Reactive Supply and Voltage Control from Generation Sources must be provided for each transaction on the Transmission Provider's transmission facilities.

The amount of reactive supply and voltage that must be supplied with respect to the Transmission Customers transaction will be determined based on the reactive power support necessary to maintain transmission voltages within limits that are generally accepted in the region and consistently adhered to by the Transmission Provider. The charges for such service are shown in Schedule 2 of the PJM Open Access Transmission Tariff. Also, new generators have the option of filing with FERC to receive a revenue stream for their reactive output.

After consultation with the Generation Owner regarding necessary step-up transformer tap changes, PJM will provide documentation to the Generation Owner specifying the required tap changes, a timeframe for making the changes, and technical justification for these changes. The Generation Owner shall provide notification to PJM when the changes have been implemented.

Generation Owners shall update reactive capability curves (D-curves) via eDART to ensure PJM and TO EMS Contingency ~~Security~~ Analysis results are accurate.

5.2.2 Regulation and Frequency Response Service

Regulation and Frequency Response service provides the continuous balancing of resources (generation and interchange) with load and maintains the Interconnection frequency at sixty cycles per second (60 Hz). Within PJM, Regulation and Frequency Response service is accomplished through the Regulation Market, which is described in this section under *"Marketing Options."*

5.3 Markets and Operations Tools

Additional information on all PJM Markets and Operations tools can be found on the PJM web site under Markets & Operations/PJM Tools.

5.3.1 Markets Gateway

This is the Market User Interface for participating in the PJM Wholesale Energy Markets, specifically the Day-Ahead Market, the PJM Regulation Market, and the PJM Synchronized Reserve Market. Users may submit resource-specific generation offers with operating details, fixed or price-sensitive demand bids, as well as bilateral transactions and financial increment and decrement bids. The PJM Markets Gateway interface also enables viewing public and private day-ahead results and managing portfolios, please refer to the Markets Gateway User Guide and Markets Database Dictionary for more information.

5.3.2 PJM inSchedule

This tool is used by Generation Owners in PJM to submit their internal PJM energy schedule data. All PJM internal transactions, including load and generation interchange adjustment modeling and implicit internal spot market schedules, are handled through the PJM inSchedule system. New users who are PJM Members may register to use Capacity Exchange and inSchedule by submitting the User Registration form from the login screen.

5.3.3 PJM Capacity Exchange

This electronic tool enables a competitive installed-capacity market and fulfills the data reporting requirements for generation owners with granted capacity status. Users of Capacity Exchange can view peak loads and obligations in any zone, shop for PJM installed capacity, and create bilateral transactions to buy or sell unit-specific or capacity credits. New users may register to use Capacity Exchange by submitting the User Registration form from the login screen.

5.3.4 eDART

The Dispatcher Application and Reporting Tool (eDART) provides communication with PJM for Generation Owners regarding unit outage and reduction requests, updates to reactive capability

curves (D-curves), Automatic Voltage Regulator status, Power System Stabilizer status, Governor status, MVAR tests, Supplementary Status Reports (SSRs), Instantaneous Reserve Checks (IRCs), Minimum Generation Reports, Gen Checkout, and for receiving and responding to required PJM data requests.

Additional applications may be integrated in eDART in the future. User registration is available from the PJM web site

5.3.5 eGADS

The Generator Availability Data System (GADS) enables the operators of generation units to submit performance data into PJM records for determination of unit availability. ~~Units are tracked on a rolling twelve-month basis for demand equivalent forced outages (EFORd) to determine their unforced capacity.~~ Unit availability data serves as an input to PJM's accreditation process for capacity resources. Operators are required to submit data monthly using the eGADS interface. New plant operators should contact PJM for user set-up.

5.3.6 Data Viewer

Data Viewer is an Internet based system that allows PJM dispatchers and participants to view current and projected system data and emergency procedures information as well as market information. Additionally, Data Viewer feed is an RSS feed of data that users may scrape for data. User registration is available from the PJM web site.

5.3.7 Resource Tracker

Resource Tracker supports the maintenance of ownership information and provides the user the ability to review all sources of ownership information. Generation Owner, or designated agent, is required to confirm the resource ownership information by November 1 annually. The window to start the process will open October 1 annually. During a Generation Transfer, Section 5.7 of the Manual, the Generation Owner, or designated agent, is required to confirm the ownership information in Resource Tracker within two (2) business days after receiving an automated email from the Resource Tracker System alerting them of the transfer.

5.4 Description of the Two-Settlement System

5.4.1 Market Participants

For more information about Market Participants please refer to PJM Manual M-11, Energy & Ancillary Services Market Operations.

5.4.2 The Day-Ahead Energy Market

The Day-ahead Energy Market allows participants to purchase and sell energy and reserves at binding day-ahead prices. It also allows transmission customers to schedule bilateral transactions at binding day-ahead congestion charges. These congestion charges are based on

the differences in Locational Marginal Prices (LMPs) between the transaction source and the sink.

Load Serving Entities (LSEs) will submit hourly demand schedules, including any price-sensitive demand, for the amount of demand that they wish to lock in at day-ahead prices. Any generator that is a PJM-designated Capacity Resource must submit a bid schedule into the Day-ahead Energy Market unless it is self-scheduled or unavailable due to outage.

Other generators have the option to bid into the Day-ahead Energy Market. Transmission customers may submit fixed or dispatchable bilateral transaction schedules into the Day-ahead Energy Market and may specify whether they are willing to pay congestion charges or wish to be curtailed if congestion occurs in the day-ahead schedule.

All spot purchases and sales in the Day-ahead Energy market are settled at the day-ahead prices. After the daily quote period closes, PJM will calculate the day-ahead schedule based on the bids, offers and schedules submitted using scheduling programs that perform least-cost, security-constrained resource commitment and dispatch for each hour of the next operating day. The day-ahead scheduling process will incorporate PJM reliability requirements and reserve obligations into the analysis. The resulting hourly schedules and LMPs represent binding financial commitments to the Market Participants. Financial transmission rights (FTRs) are accounted for at the day-ahead LMP values.

For more information please see PJM Manual M-11, Energy & Ancillary Services Market Operations.

5.4.3 The Real-Time Balancing Market

The Balancing Market is based on real-time operations. It provides financial incentives for generators to follow the real-time economic dispatch instructions issued by PJM.

Generators designated as PJM Capacity Resources that are available but not selected in the day-ahead scheduling may alter their bids for use in the balancing market. If not altered, the original bids remain in effect for the Balancing Market.

Balancing prices are calculated on the actual system operating conditions as described by the PJM state estimator. LSEs will pay balancing prices for any demand that exceeds their day-ahead scheduled quantities. The LSEs will also receive revenue for demand deviations below their scheduled quantities.

Generators are paid balancing prices for any generation that exceeds their day-ahead scheduled quantities and will pay for generation deviations below their scheduled quantities. Transmission customers pay congestion charges for bilateral transaction quantity deviations from day-ahead schedules. All spot purchases and sales in the balancing market are settled at the balancing prices.

For more information please see PJM Manual M-11, Energy & Ancillary Services Market Operations.

5.4.4 Grid Accounting

There are several services within the Interchange Energy Market for which PJM calculates charges and credits that are allocated among the PJM Members. Detailed explanations may be found in the PJM Manuals M-27, Open Access Transmission Tariff Accounting, M-28, Operating Agreement Accounting, and M-29, Billing.

PJM Energy Market accounting is designed to operate on a balanced basis. That is, the total amount of the charges equals the total amount of credits; there are no residual funds. With certain exceptions, each of the individual services also operates on a balanced basis. Charges and credits for a particular service (such as regulation) offset each other exactly. In certain cases, excess charges or credits in one service category are used to offset charges and credits for another service.

Accounting Input Data

PJM collects information regarding actual operations during the hour. This information is recorded either by the PJM System Operators or by automated systems. The market accounting processes use this information as input data. Other accounting input data is provided from various systems and databases. This information includes data describing PJM Members' installed generating resources, scheduling information for PJM Members' transactions, and Transmission System parameters.

5.5 Pre-Scheduling and Scheduling

One of the principal purposes of the PJM pre-scheduling activities is to establish and maintain the markets database containing current generator information. The database contains resource-specific information including company, plant, operating limits, resource availability, etc., and is used during pre-scheduling, scheduling and dispatching. This data allows PJM to schedule generation resulting in the lowest overall production cost while maintaining the reliability of the PJM RTO.

Each Generator must advise PJM on a daily basis of its generation schedule and/or bid price for the following day. Generators must abide by these schedules unless approval for deviation is secured from PJM or unless equipment problems beyond the Generator's control prevent operation at the specified schedule.

Specific details concerning the data requirements and deadlines for the pre-scheduling and scheduling processes are contained in the PJM Manuals M-10, Pre-Scheduling Operations and M-11, Energy & Ancillary Services Market Operations.

5.6 Unit Commitment

5.6.1 Process

The resource commitment process includes the Markets Database (formerly the Unit Commitment Database or UCDB) and the functions of Hydro Scheduler and the Dispatch Management Tool (DMT). The Markets Database is a large database containing information on each resource that operates as part of the PJM Interchange Energy Market.

The Resource Scheduling and Commitment (RSC) programs provide an optimized economic commitment schedule for thermal generating units and are the primary tool used to determine commitment of resources that have operating constraints requiring multiple-day operation.

The Hydro Calculator computes hourly reservoir elevations and hydro plant generation from input river flows and hydro plant discharges.

The DMT runs in the corporate computer system and performs accounting and operations functions with respect to combustion turbines. Additional information on the PJM resource commitment process may be found in the following manuals:

- PJM Manual for Pre-Scheduling Operations (M-10)
- PJM Manual for Energy & Ancillary Services Market Operations (M-11)
- PJM Manual for Billing (M-29)

5.6.2 Data Requirements

The two-settlement technical software develops the Day-Ahead Market results based on minimizing production cost to meet the demand bids and decrement bids. The results incorporate PJM Balancing Authority security constraints and reliability requirements necessary for reliable operation.

Two-Settlement Technical Software

The PJM Two-Settlement Technical Software is a set of computer programs performing security-constrained resource commitment and economic dispatch for the Day-Ahead Market. The individual programs are:

1. Resource Scheduling and Commitment (RSC)—Performs security-constrained resource commitment based on generation offers, demand bids, increment offers, decrement bids and transaction schedules submitted by participants and based on PJM Balancing Authority reliability requirements. RSC will enforce physical resource-specific constraints that are specified in the generation offer data and generic transmission constraints that are entered by the Market Operator.

2. Scheduling, Pricing and Dispatch (SPD)—Performs security-constrained economic dispatch using the commitment profile produced by RSC. SPD calculates hourly unit generation MW levels and LMPs for all load and generation buses for each hour of the next operating day.
3. Study Network Analysis (STNET)—Creates a powerflow model for each hour of the next operating day based on the scheduled network topology, the generation and demand MW profile produced by SPD and the scheduled Tie Flow with adjacent Balancing Authorities. STNET performs AC contingency analysis using the contingency list from PJM EMS and creates generic constraints based on any violations that are detected.

After the close of the generation re-bidding period at 1415, the RSC is the primary tool used to determine any change in steam unit commitment status. Commitment changes are based on minimizing the additional startup costs and costs to operate steam units at economic minimum, as well as providing sufficient operating reserves to satisfy the PJM Load Forecast.

The purpose of this second phase of resource commitment is to ensure that PJM has scheduled enough generation in advance to meet the PJM Load Forecast for the next operating day and for the subsequent six days. CT units are included in the scheduling process and are scheduled in the Day-Ahead Market. However, the decisions concerning actual operation of pool-scheduled CT units during the operating day are not made until the current operating hour in real-time dispatch.

5.7 Generation Transfer Process

In the event that a generation resource changes ownership via transfer or sale, or a generation resource has a transfer of responsibilities, PJM Member Relations shall be contacted in advance of the change by initiating the Generation Transfer process through the PJM Member Community: http://www.pjm.com/markets-and-operations/etools/member-community.aspx.

PJM's client managers will facilitate the generation transfer process for members in order to effectuate the changes in PJM. Generation Transfer documentation shall be finalized and approved by impacted parties at least three (3) complete business days prior to the requested effective date of the transfer within the PJM systems in order to maintain operation continuity within PJM's systems and tools. Once the transfer has entered into those three (3) business days, the transfer cannot be rescinded. Questions on the process should be directed to PJM Member Relations via http://pjm.com/about-pjm/who-we-are/contact-us.aspx

A Member may seek to permanently transfer all or some rights and obligations, including financial rights and obligations, associated with a particular generation resource to a separate Member or within a different account of their own. The following are examples of typical generation transfer scenarios that should follow the Generation Transfer process; however, this is not a fully exhausted list:

- Member to Member

- Member to Non-Member/Agent
- Within a Member (transferring generator to a new billing subaccount but the PJM Member/ owner does not change)
- Corporate separation (unregulated to regulated)
- Joint Ownership Changes
- Functional responsibilities change (dispatch agent, telemetry provider, energy market agent, eDART reporting, etc.)

All generation transfers require PJM to ensure all data is accurate within the systems, all legal agreements are approved, and the appropriate contact information is provided to dispatch. When a transfer is occurring between separate parties, PJM expects that these parties will, in good faith, cooperate with PJM and the other entity.

5.7.1 Initiate Process

In order to initiate a request for a generation transfer, a Member must submit a Request Generation Transfer through the PJM Member Community: http://www.pjm.com/markets-and-operations/etools/member-community.aspx.

The Generation Transfer Request User Guide is located in the Member Community to provide step-by-step instructions on how to obtain the required information needed to submit the request. It is important for both the Transferor ("from" Member) and Transferee ("to" Member/ Company) to consider the timeline requirements detailed in Section 5.7.3 before determining the requested effective date of the transfer within the PJM systems. PJM requests the submittal on Member Community requesting a generation transfer to occur at least 45 days prior to the requested effective date of the transfer within the PJM systems. This submittal starts the PJM internal process to review the submitted information and determine what else may be needed to ensure the generation transfer can occur on the requested effective date of the transfer within the PJM systems.

Once the form is submitted, a PJM Member Relations will contact the entity within two (2) business days. The PJM Client Manager may require more information from the current Member to facilitate the generation transfer process. The potential additional information needed is listed in Section 5.7.2.

5.7.2 Information Required

Since a Generation Transfer may occur for various scenarios, the required information may be different for each scenario to complete the transfer. Further discussions between Member Relations and the entities will help determine what additional information is required.

5.7.2.1 Legal and Administrative Agreements

Refer to Section 2.2 of this Manual for further guidance.

5.7.2.2 Membership

The Transferee or an agent representing the Transferee must either be a current active PJM Member or become a PJM Member at least three (3) business days prior to the requested effective date of the transfer within the PJM systems. The Operating Agreement, Section 11.6 describes the requirements an entity must meet to qualify for Membership. The PJM Tariff, Attachment Q describes the credit policy and requirements. The application form and process can be found in the *Become a Member* section on PJM.com

5.7.2.3 Fuel Cost Policy

All Market Sellers who submit cost-based offers must have submitted to PJM a Fuel Cost Policy 45 days prior to the requested effective date of the transfer within the PJM systems or an alternative date agreed to by PJM as stated in Manual 15, Section 2.3.1.2. The fuel cost policy requirements are detailed in Manual 15, Section 2.2~~3~~. All concerns or discussions should be addressed with the Fuel Cost Policy Team at FuelCostPolicyAnalysis@PJM.com.

5.7.2.4 Markets Gateway

Markets Gateway is the system that PJM Market Participants use to participate in the Day-Ahead Energy Market, Real-Time Energy Market, Synchronized Reserve Market and Regulation Market. Members will submit generation offers into Markets Gateway. PJM must ensure the proper entity has access to Markets Gateway and that entity has access to Market Gateway on the approved appropriate day. The Generation Transfer Request User Guide located on the Member Community webpage provides additional guidance regarding election of price or cost-based startup and no load parameters and transferring rights of historical generation data to the Transferee.

5.7.2.5 Dispatching Company

The Transferee must indicate to PJM if the dispatching company is changing. If a change is occurring, then PJM must receive the new dispatch company name, company contact name, and All Call phone numbers. The All Call Form can be found in Manual 14D, Attachment C or in the Member Forms section on PJM.com. Additionally, a Member that transfers dispatch rights or obligations associated with its generation facility to a third party must provide PJM with a Declaration of Authority effective prior to the requested effective date of the transfer within the PJM systems. The Declaration of Authority agreement shall specify the rights and obligations and of the third party and new Generation Owner with regard to conducting business with PJM, and shall be in a form reasonably acceptable to PJM.

5.7.2.6 Member Training and Certification

PJM has training and certification requirements in place for individuals who:

- Operate or dispatch on the PJM system,
- Are in direct communication with the PJM System Operator, and

- Perform daily operations-related functions at the direction of the PJM System Operator during normal, emergency and /or system restoration states

There requirements are outlined in Manual 40. Due to their interaction with PJM control room and potential impact on system reliability, applicable training and certification requirements must be met, in accordance with the manual, prior to the new entity beginning operations. If the dispatch agent responsibility is changing, then the new generation resource owner will provide the Member Training Liaison contact information to PJM

5.7.2.7 Capacity Exchange account

The Reliability Pricing Model (RPM) conducts various auctions prior to the Delivery Year. Therefore, specific transaction and processes must be followed to ensure the transfer of the resources and obligation are done properly. Depending on how the Transferor structured its capacity will determine how many transactions are required to move each resource from the Transferor to the Transferee. Coordination and agreement between the Transferor and Transferee is required for the entire process. Contact the Capacity Group at RPM_Hotline@PJM.com to initiate this step.

5.7.2.8 Telemetry and Telecommunications

PJM must ensure that the electronic and voice links between PJM and the Transferee meet PJM standards as listed in Manual 14D. The following sections within Manual 14D describe these standards in further detail.

- Control Centers and Interpersonal Communications – Section 3
- Data exchange & Metering – Section 4
- Pre-Operational requirements – Section 6

The Transferee must determine if the provider of real-time telemetry is changing. If the provider is changing, and depending on current communication protocol setup for the new provider, then additional time may be required to ensure proper communication between PJM and the new provider prior to the requested effective date of the transfer within the PJM systems.

5.7.2.9 Ancillary Services

Regulation, Reserves and Black Start are ancillary services that PJM must coordinate and communicate participation among multiple internal groups. Therefore, the Transferee must notify PJM if the generation resource will be participating in any of these three (3) services.

- Regulation – re-qualification business rules can be found in Manual 12, Section 4.5. Resources will not be qualified to offer regulation until they successfully complete the re-test.
- Reserve – confirmation of resource within PJM systems
- Black Start – contact name and number(s) for testing notifications and restoration events must be on file with PJM, as further described in Manual 12, Section 4.6.

5.7.2.10 PJM Tools

PJM utilizes online tools to help facilitate the communication of specific data between PJM and the resource. Depending on the type of market activity the Transferee decides for the resource, will determine the required online tool(s) access. Descriptions and details about specific online tools are found in the Generation Transfer Request User Guide located on the Member Community webpage.

Note:
As soon as practicable, but no later than 3 business days following a generation transfer or a new generation resource being placed in commercial operation, the "eDART Contact" responsible for tickets and data submittals in eDART must complete the eDART Contact Survey – all fields are required. The survey is accessed by selecting the "Gen. Tickets" menu item and then selecting GO Contact Survey from the GO Survey menu. Questions can be sent to eDartGenContacts@pjm.com edartgosurvey@pjm.com

5.7.2.11 PJM Settlements and Billing Items

PJM settlement and billing will be based on which PJM account/subaccount the resource is located. However, there are few other items that PJM must know to ensure proper billing.

- Reactive Credits – at least 90 days prior to the requested effective date of the transfer within the PJM systems, or such shorter period authorized by a FERC order, a resource must either

(1) submit to the FERC the appropriate filings; or

(2) provide to the Transmission Provider and file with the FERC an informational filing, as further described in PJM's Tariff, Schedule 2

- Operating Reserves – PJM needs to determine if the resource has a relationship with another resource that they should be considered a 'single bus' and able to offset one another as further described in Manual 28, Section 5.3

5.7.2.12 Resource Tracker

Confirmation of the resource in Resource Tracker must be in accordance with Section 5.3.7 of the Manual.

5.7.3 Process Timeline

All Generation Transfer documentations shall be finalized and approved by impacted entities at least three (3) complete business days prior to the requested effective date of the transfer within the PJM systems. Once the transfer has entered into those three (3) business days, the transfer cannot be rescinded. Since a Generation Transfer may occur for different reasons, each

timeline will vary. The following items should be considered when determining a requested effective date of the transfer within the PJM systems:

- Membership – Obtaining a PJM membership can take up to 90 days after all the required paperwork has been signed and received by PJM.
- Legal – provided all documentation as described in Section 2.2 of this Manual
- Fuel Cost Policy – submit a policy to PJM at least 45 days prior to the requested effective date of the transfer within the PJM systems or on such alternative date agreed to by PJM
- Initial Training and certification – Generation Owners may contract with dispatching companies that already meet PJM requirements or have their own personnel dispatch. Depending on the experience of the individuals involved, it may take several months to get a new generation dispatcher qualified.
- Telemetry and Communication Protocol for new Members – may take up to three (3) months
- Telemetry and Communication Protocol for existing Members – may take up to 30 days
- Reactive Credits – file with the Transmission Provider and/or the FERC Commission at least 90 days prior to the requested effective date of the transfer within the PJM systems unless a waiver of the 90-day notice requirement is granted by FERC

Section 6: Pre-Operational Requirements

Welcome to the *Pre-Operational Requirements* section of the *PJM Manual for Generator Operational Requirements*. In this section you will find the following information:

- Description of data exchange testing procedures (see "*Data Exchange Testing*").
- Description of required training procedures (see "*Training and PJM TO Operator and Generation Dispatcher Certification*").
- Pre-operational requirements of Generation for coordination with dispatch (see "*Coordination with Dispatch*").

6.1 Data Exchange Testing

6.1.1 Introduction

PJM interfaces with a wide range of different customer systems. Procedures for verifying that these systems are ready to go into production operation vary by type of system, its functionality, the number of data points, etc. For purposes of illustration, test requirements for a Generation Management System (GMS) are provided here. A GMS is typically the most comprehensive system used for generator interconnection, and therefore, has the most comprehensive testing requirements.

By definition, a GMS provides a centralized control center interfacing via remote terminal units to numerous generating locations. This data is then sent to PJM via the Inter-control Center Communication Protocol (ICCP) link.

6.1.2 Test Requirements for Member Company New Generator Management Systems (GMS)

In general, PJM is responsible for testing data connections between a Member Company's GMS hardware and PJM's computers. PJM generally does not test communication between a Member's remote terminal units (RTUs) and the Member's GMS computers. When using a new GMS system, the Member Company should test input of all RTU information/data into their GMS before involving PJM.

Communication testing by PJM uses the TEST System, which tests the communication of information from the Member's GMS database into the PJM database. If changing from the previous GMS to the new one, testing will be enhanced if all of the data available in the existing GMS is simultaneously available to the new GMS. Where possible, testing of any new GMS should be done from the company's parallel test system connected to the PJM TEST system.

PJM does not require that any RTU be connected to the Member's GMS during testing with PJM's TEST system. The Member Company may have as many RTUs connected to their (new)

GMS as they wish while testing with PJM's TEST system. Testing with PJM's TEST shall not reduce the availability of accurate telemetry to PJM's Operational EMS.

The Member Company must comply with these PJM naming and telemetry conventions (if applicable to the installation):

- Transmission line MW and MVAR
- Transformer MW and MVAR
- Generating unit MW and MVAR
- Station kV
- Frequency
- Transformer taps

In addition, the Member Company must support transmission of breaker/disconnect status. Testing should include several scheduled/intentional communication re-starts initiated by both PJM and the testing company.

After the Member Company has successfully completed testing with PJM's TEST System, PJM will schedule the test of the company's new GMS with all telemetry available. The test should comply with the following criteria:

- Real-time metering via ICCP data link connection must be in place before testing in order to maintain reliability of the PJM Balancing Authority.
- The Member Company must make known when its test period is starting.
- During this time, the Member Company shall maintain the old GMS in such a state that it can be restored in total within one hour upon demand by the PJM Supervising Dispatcher if the new GMS is not performing to the Dispatcher's satisfaction.

Link-up time for ICCP Links: The link shall be 99.5% operational or higher. PJM shall qualitatively judge whether or not the data is acceptable.

6.1.3 Communications Considerations

For companies using the ICCP protocol, the following specific items should be considered:

- The requirements for communication with PJM over can be obtained from your PJM Project Manager.
- The ICCP association form must be received by PJM for PJM to properly configure the link before any testing can start.
- Before testing with PJM's TEST system, it is desirable for the Member Company's vendor to communicate with the PJM DEV system.
- The Member company and PJM must take special precautions to prevent the Member company test GMS from communicating directly to the PJM Real-Time EMS system.

6.1.4 Offline Test

- Both companies will bring the data link up between the Member Company and PJM and verify that all sessions for ICCP are up.
- Both companies will compare values between the Member company and PJM such as:
  - Line and transformer flows: All 500 kV, 345 kV, selected 230 kV and tie lines (MW and MVAR),
  - Generator values
  - Testing Company Totals
  - Frequency
  - Individual Unit MW base points from (SCED)
  - Regulation signals
  - Breaker status
  - Voltages
  - Transformer taps
  - Pond levels
- Both companies will check the points in the various reporting cycles to see that they are updating at the proper scan rate.
- PJM will have the Member company tel-fail several lines, including facilities at different voltage levels. Companies will compare values, singly and several at once, adjacent and separated in the PTID list. Both companies check for the appropriate flag set in the status code section of the Value Table for the corresponding PTID.
- PJM will have the Member Company restore tel-fails and compare values.
- PJM will have the Member company tel-fail breaker status out-of-service for selected breakers and then restore, checking status each time.
- PJM will have the Member company change status on a device and verify.
- PJM will bring up various PJM EMS displays and check values.
- PJM will change scheduled frequency (e.g., 59.98 Hz). Member Company will verify the change.
- PJM will change Individual Unit MW basepoints. Member Company will verify the change.
- PJM will suspend regulation. Member Company will verify they are receiving a zero regulation signal.
- PJM will unsuspend regulation. Member Company will verify they are receiving the regulation signal the PJM is dispatching.
- PJM will cause the ACE signal to go from a lower to a raised position. Member Company should verify both the correct value and direction.

6.1.5 Online Test

The Online Test involves the connection of the Member Company's new GMS system to the PJM's RT EMS system. The communications should be accurate and reliable. All systems will be closely watched by the test director over a period of time. During this test, repeat as many steps as possible from the Offline Test above when the new link is brought on line.

6.1.6 Dispatcher Testing Procedure and Computer-to-Computer Testing

Verify Key Control Items on PJM's Displays

- PJM will request the Member Company to tel-fail a value for one of their transmission facilities.
- Check for the appropriate flags and status on applicable PJM EMS displays.
- PJM will change scheduled frequency (e.g. 59.98 Hz) and verify that the Member Company received the change. PJM will return the frequency signal to normal.

Verify Network Applications

PJM will verify that the State Estimator Application operates properly with the member's equipment included in the PJM Network Model. Specifics of this verification will be based on the overall impact of the member's equipment on the PJM system.

Verify Accounting Data

After confirming connectivity to the customer's metering equipment, PJM will verify the validity and accuracy of individual test data being transmitted. Test data will also be made available from SCADA to Markets Settlements to verify that it is being accurately transmitted.

The Generation Owner must designate the applicable network model bus(es) at which each revenue meter is to be priced. Once accounting data is successfully being stored in the Market Settlements Database, the Generation Owner and the Market Settlements staff will compare the accounting data being sent from the generator to the data being received by the PJM settlements system to confirm that it is being transferred accurately.

Verify Real-Time Operational Scheduling

After confirming connectivity, use the Unit Hourly Update page (in Markets Gateway) with the current date to simulate a change in a unit's operational status. PJM will verify that the change was received.

6.2 Training and PJM TO Operator and Generation Dispatcher Certification

6.2.1 Training

Refer to Training Requirements in PJM Manual M-40, Training and Certification Requirements.

6.2.2 PJM TO Operator and Generation Dispatcher Certification

Refer to Certification Requirements in PJM Manual M-40, Training and Certification Requirements.

6.3 Coordination with Dispatch

6.3.1 Operation

Every Generator interconnected with and synchronized to the transmission system must at all times coordinate operation with PJM and the Transmission Owner, providing all necessary and requested information and equipment status, to assure that the electrical system can be operated in a safe and reliable manner.

This coordination includes, but is not limited to:

- Supplying generator net-MW and MVAR output.
- Supplying frequency and voltage levels.
- Scheduling the operation and outages of facilities including providing advanced notification.
- Coordinating the synchronization and disconnection of the unit with the PJM or local system operator.
- Providing data required to operate the system and to conduct system studies.
- Providing documented start-up and shutdown procedures including ramp-up and ramp-down times.
- Following PJM-directed plant operation during emergency and restoration conditions.
- Following PJM-directed operation during transmission-constrained conditions.

Note:
For distributed generators modeled at less than 10MW, PJM requires the generators to be able to follow PJM direction via SCADA or an agreed upon alternative method.

6.3.2 Communication

To ensure reliable operations and responsiveness, Generators must be properly staffed to support a 7-day, 24-hour contact for communications. Data must be sent to PJM automatically.

In the event that the data is temporarily not received by PJM, the Generation Owner must call PJM with the operating data at intervals specified by PJM. The Generation Owner shall correct any problems associated with the failure of equipment within a reasonable time.

The Generator and Transmission Owner shall promptly exchange all information relating to all conditions which affect (or could affect) the operations of any facility reporting data.

The Generator shall communicate the outage of any electrical equipment connecting the facility to the PJM system in accordance with these requirements:

- Each facility will be assigned to one of the PJM Transmission Owners as its primary contact, unless arrangements are made to communicate this information directly to PJM. This assignment is based upon the voltage level of the connection to the Transmission System and the geographic location of the facility.
- All planned and maintenance outages of electrical equipment requiring involvement of PJM personnel must be requested by the Generator. The appropriate information must be in a format defined by PJM.

6.3.3 Test Energy

Test energy is energy generated for a predetermined period by a new resource interconnecting with the PJM Balancing Authority for the first time. The test energy period starts with Stage Two energization (initial synchronization of generator to the transmission system per ICSA). Depending on the size and nature of the generating unit(s), this period may be a matter of hours or days.

Providers of test energy are not required to participate in the Day-Ahead (DA) energy market. Test energy compensation can be obtained at Real-Time (RT) Locational Marginal Price (LMP).

Market participation & compensation can only occur if proper metering and modeling are completed as specified in other parts of this manual and the Power Meter account is active.

Day-Ahead energy market participation is optional to mitigate RT deviations from DA position.

Before providing interconnected test energy, Generators must:

1. Have in place an executed final agreement (e.g., Generation Interconnection Agreement or Interconnection Service Agreement) with PJM and the interconnected Transmission Owner.
2. Provide PJM with an accurate Test Schedule via email, including times and output of unit.
3. Provide notification to PJM Dispatch Operations at least 20 minutes prior to a change-in-state of each generating unit.
4. Provide the PJM Dispatch Operations and the Market Settlements department accurate information as to when unit will be available for commercial use and in which markets it intends to do business.

If metering is not in place and verified via test, then an InSchedule internal bilateral transaction may be used to support any agreement between the Generation Owner and the Transmission Owner. This is an option PJM provides to the parties involved but is not a requirement.

Upon completion of the test period and when the generator is determined to be available for commercial operation, each unit is subject to other voice and data test requirements which are discussed in other sections of this manual.

6.3.4 Other Requirements

The Generation Owner shall develop operating principles and procedures for its facility, coordinated with PJM requirements and provide the necessary training and certification for appropriate employees. Generators must provide for the necessary communication of information between the Generator and PJM. This information includes generator data for each generating unit, unit step-up transformer and auxiliary transformer.

Each Generator shall develop operating practices and procedures, coordinated with PJM, for normal and emergency operation and assistance in remedial action. These practices and procedures must incorporate the applicable standards and requirements contained in the PJM Manuals and the NERC Reliability Standards.

All Generating Facilities, regardless of MW capacity, must provide reactive capability curves before entering commercial operations. In addition, those Generating Facilities that meet the testing criteria in Attachment E: PJM Generator and Synchronous Condenser Reactive Capability Testing, of this manual must complete a reactive test as soon as practicable, but no later than 90 days after achieving commercial operations.

Prior to entering commercial operations, and upon any material change affecting cold weather operating limits, all Generating Facilities must provide PJM with design data specific to cold weather. This includes, but is not limited to, the lowest temperature the facility is designed to operate reliably down to, and any procedural or contractual limits that require action when outside temperature reaches a specific low temperature. Additional data is required from inverter based resources.

Each Generator shall have and follow a voltage schedule provided to them by the local Transmission Owner or the PJM default voltage schedule as per PJM Manual M0~~-~~3, Transmission Operations, Section 3.11~~3~~.

Conditions may be encountered on the PJM system, which require participation in remedial action. These include, but are not limited to: actual or contingency flow or voltage-limit violations, violation of synchronous stability limits, low or high frequency, voltage reductions, system blackouts, and maximum and minimum generation conditions.

Each Generator shall immediately notify PJM of any condition that inhibits operating in a reliable manner or in a manner previously agreed upon. Such conditions include, but are not limited to

the availability of fuel, inability to operate due to labor restrictions, equipment, environmental or weather-related problems.

To ensure that all PJM personnel responsible for the design and operation of the PJM system are familiar with equipment configurations, capabilities, and operating parameters, PJM may request, and the Generator shall provide in a timely manner, detailed information about the type, nature, and operating characteristics of the facility and all related equipment.

The Generator must keep and maintain accurate and complete records for interconnection facilities. These records must contain information regarding the operation and maintenance of all equipment and must be consistent with good industry practice. The data in these records must be sufficient for PJM to comply with applicable regulatory requirements. The Generator must make these records available to PJM for inspection and copying as PJM may request.

Section 7: Generator Operations

Welcome to the *Generator Operations* section of the *PJM Manual for Generator Operational Requirements*. In this section you will find the following information:

- Description of the dispatching process (see "*Dispatching of Generation*").
- Switching requirements for all equipment owned, operated or controlled by a Generation Owner (see "*Switching Requirements*").
- Generator information and reporting requirements (see" *Critical Information and Reporting Requirements*").
- Requirements and procedures for Generator synchronization and disconnect (see "*Synchronization and Disconnection Procedures*").

7.1 Dispatching of Generation

7.1.1 Generator Real-Power Control

Generating Facilities must deliver the electric energy generated by the facility to PJM at the point(s) of interconnection in the form of 3 phase, 60-Hertz alternating current at the nominal system voltage at the point of interconnection.

Generating Facilities and their protective systems (relaying, V/Hz, etc.) should meet the frequency guidelines listed in PJM Manual M-36, System Restoration, section 2.3, to coordinate with system preservation under-frequency load shedding. Additionally, Generating Facilities and their protective systems should be capable of operation at over-frequency up to 61.7 Hz for a limited duration. Refer to NERC Reliability Standard PRC-024, Generator Frequency and Voltage Protective Relay Settings. For Generating Facilities connected to radial distribution lines of voltage less than 50 kV, refer to the ride through guidance document posted at https://www.pjm.com/planning/design-engineering/to-tech-standards.aspx for additional guidance.

At no time shall the operation of the Generating Facility, including the associated generators or any of their auxiliary devices, result in an electrical output in which harmonic distortion exceeds the recommended limits contained in IEEE Standard 519, which defines voltage waveform and harmonic content.

All Generating Facilities are expected to follow their economic basepoint automatically unless the resource is operating as non-dispatchable and represented as such in Markets Gateway.

Governor outages for all Generating Facilities during periods of operations must be kept to a minimum. If a governor or equivalent electronic speed control device for any unit, regardless of resource type, is out of service or unable to react to a change in system frequency, it must be immediately reported to PJM via eDART as a governor outage. When a generator governor is

not available, the unit output should not fluctuate from pre-scheduled output unless otherwise directed.

All Generating Facilities, including pseudo tied or dynamically scheduled Generating Facilities, excluding Generating Facilities that entered the PJM generation queue on or after 10/1/2018, should operate on unrestricted governor (or equivalent electronic speed control device) control to assist in maintaining interconnection frequency, except for the period immediately before being removed from service and immediately after being placed in service.

All Generating Facilities that entered the PJM generation queue on or after 10/1/2018, must operate on unrestricted governor (or equivalent electronic speed control device) control to assist in maintaining interconnection frequency, except for the period immediately before being removed from service and immediately after being placed in service. Governor response to changes in system frequency, high and low, outside the governor deadband, will be evaluated for compliance based on criteria outlined in PJM Manual 12 – Balancing Operations.

Note: The performance of all Generating Facilities operating at the time of a high/low frequency event is evaluated by PJM. All Generating Facilities should provide governor response; however, those that entered the PJM generation queue after 10/1/2018 are obligated to have frequency response capability, and are evaluated based on the performance criteria in Manual 12 – Balancing Operations.

With exception of nuclear generators, all Generating Facilities with gross plant / facility aggregate nameplate rating greater than 75 MVA are requested to ensure that, in the absence of technical or operational considerations, the Generating Facility governor (or equivalent electronic speed control device) and Distributed Control System (DCS) settings provide dead bands that do not exceed +/- 36 mHz, and droop settings that do not exceed 5%.

With exception of nuclear generators, all Generating Facilities that entered the PJM generation queue on or after 10/1/2018 are required to ensure that, in the absence of technical or operational considerations, the Generating Facility governor (or equivalent electronic speed control device) and Distributed Control System (DCS) settings provide dead bands that do not exceed +/- 36 mHz, and droop settings that do not exceed 5%.

Should a Generating Facility be unable to meet these criteria, the Generation Facility's actual settings and reasons for being unable to meet these criteria shall be forwarded to PJM. System conditions permitting, Generating Facilities must respond immediately to a PJM request directing a change in real power output and must proceed at a rate which is within 2% of the Generating Facility's stated ramp-rate, until the prescribed output is reached.

7.1.2 Voltage and Reactive Control

Over-voltage and under-voltage protection systems must be capable of allowing abnormal system operations within PJM post-contingency operating limits. Momentary voltage fluctuations

are permitted provided they neither disturb service provided by PJM or the Generator on their respective systems nor hinder PJM from maintaining proper voltage conditions on its system.

All Generators must install and have available field-excitation regulators, or equivalent electronic controls (voltage regulators). When a generator field-excitation regulator, or equivalent electronic control (voltage regulator) is replaced, and the replacement voltage regulator includes a Power System Stabilizer (PSS), the PSS should be commissioned and placed in service after notifying PJM using the email address NERC.Transmission.Planner@pjm.com.The reactive output of the generator must be regulated in the manner specified by PJM and/or the Transmission Owner. PJM Transmission Owners must allow generators to follow the PJM default voltage schedules as supplied in PJM Manual M-3, or must supply and communicate, via eDART, voltage schedules and a low and high voltage bandwidth to all Generation Owners in their zone and to PJM for applicable generators meeting the following criteria:

- individual generating units greater than 20 MVA
- generators that aggregate to 75MVA or greater connected to a common bus; for Mixed Technology Facilities, such aggregate quantity is calculated across all the generating units of all technology types connected to a common bus—e.g., the sum of all inverter MVA ratings sharing a Point Of Interconnection at the Mixed Technology Facility)
- generators that are registered as a NERC Category 2 GO/GOP, typically 20 MVA aggregate nameplate capacity and connected at 60 kV or greater, and may or may not be BES-connected
- black start generators
- any other Generation Owners that request a voltage schedule

The eDART Voltage Schedule application is used to ensure consistent tracking and reporting protocols for communication of generator voltage schedules between Transmission Owners, Generation Owners, and PJM. On an annual basis, PJM shall initiate a voltage schedule review, in which applicable generator voltage schedules shall be reviewed and updated as needed by Transmission Owners, for acknowledgement by Generation Owners through the eDART Voltage Schedule application. Questions regarding a voltage schedule can be sent via email to VoltageSchedules@pjm.com.

The eDART Voltage Schedule application allows Transmission Owners to specify voltage schedules for each applicable generator in the form of a Voltage Schedule ticket containing a

- Target voltage schedule
- Upper and lower bandwidths, and the
- Regulated transmission bus

The specified schedule shall be based on either the PJM default voltage schedule, or the Transmission Owner’s specifications, which may be any one of the following schedule types:

- Voltage

- Reactive Power
- Power Factor

The eDART Voltage Schedule application is also used to ensure that all applicable generators have either a specified voltage schedule or an approved exemption (based on a Transmission Owner exemption request). Each generator voltage schedule will be submitted by the Transmission Owner into the application, followed by PJM's technical review, and then by the Generation Owner's acknowledgement.

Generation Owners shall communicate concerns regarding the assignment of the Transmission Owner voltage schedule/bandwidth or PJM Default Voltage Schedule/Bandwidth to PJM and the TO for resolution. This communication shall be made via the eDART Voltage Schedule application by using the GO Comment functionality.

A Transmission Owner wishing to exempt an applicable generator from following a voltage schedule shall submit an exemption request via the eDART Voltage Schedule application, including the engineering basis such as, but not limited to, stability limitations, generator limitations etc. for such exemption. PJM, in coordination with the affected Transmission Owner, must review the request and provide approval (or denial) based on their analysis, before the change can go into effect.

Non-synchronous generating facilities which submitted a New Service Request on or after November 1, 2016 are required to provide dynamic reactive power and follow the assigned voltage schedule. (FERC Order No. 827 - Reactive Power Requirements for Non-Synchronous Generation.)

In accordance with PJM Manual M-3, Transmission Operations, section 3.11, a voltage schedule shall be provided to newly connected generators prior to commercial operation.

Generation Owners shall comply with the assigned voltage schedule in automatic voltage control mode (AVR in service and controlling voltage). Generation Owners are required to maintain the same voltage schedule if an AVR is out of service unless directed otherwise. Being in any AVR mode other than "Automatic controlling voltage" mode must be documented in eDART and approved by PJM and the TO. PJM categorizes the different voltage control modes of operation for generators (voltage, reactive power, and power factor) which are described in the following section.

AVR Operating Mode	Expected Generator Response
Automatic controlling voltage (voltage schedule)	Reactive output varies based on the grid system needs to maintain the reference voltage within the assigned voltage schedule's bandwidth up to the reactive capabilities of the generator. This is the

AVR Operating Mode	Expected Generator Response
	standard voltage control operating mode for most generators in PJM.
Automatic controlling MVARs (MVAR schedule)	Reactive output remains steady based on scheduled MVARs
Automatic controlling power factor (power factor schedule)	Reactive output varies based on the real power output of the generator to maintain a constant ratio of real power versus apparent power (constant power factor)
Manual	Reactive output varies based on the manual adjustments made by the plant operator

Volt-Var Control

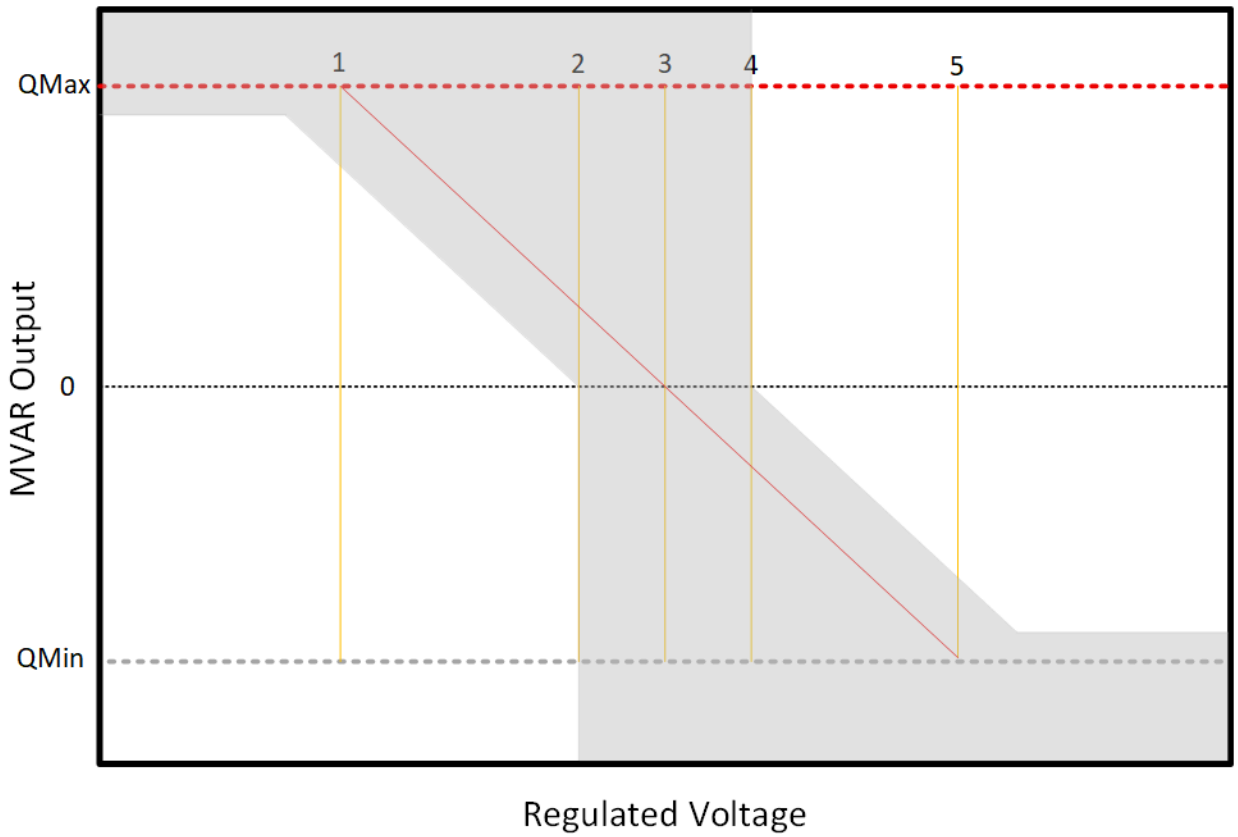

Legend

---	Max Reactive Output (Qmax) 32.87% of Max MW
---	Min Reactive Output (Qmin) -32.87% of Max MW
1	Vref – 0.020 Per Unit
2	Vref – 0.005 Per Unit
3	Target Voltage a.k.a Voltage Reference (Vref)
4	Vref + 0.005 Per Unit
5	Vref + 0.020 Per Unit

The Reactive Control Assessment Graph (Figure 7.1.2 A, above) describes the acceptable range for generator MVAR output to any system reference voltage, as noted by the gray area. In general, low voltage should be supported by producing MVARs and high voltage should be arrested by consuming MVARs (negative slope).

Qmax is the required maximum capability production of reactive power for a generator (positive MVAR) throughout its dispatchable range, which is 32.87% of its max rated MW correlating with 0.95 Power Factor (pf) lagging. Qmin is the required maximum capability consumption of

reactive power for a generator (negative MVAR) throughout it's dispatchable range, which is 32.87% of its max rated MW correlating with 0.95 Power Factor (pf) leading.

The red Nominal Volt-Var Line represents a conceptual minimum acceptable gen reactive control behavior. Steeper responses are preferred. The reference line #1 represents (Vref – 0.020 Per Unit (PU)) or system voltage 0.02 P.U. below target, at which the generator should be at it's maximum MVAR production. The reference line #5 represents (Vref + 0.020 Per Unit (PU)), or system voltage 0.02 P.U. above target, at which the generator should be at it's maximum MVAR consumption. The line between those two points is the Nominal Volt-Var Line, bisected by line #3, which represents a perfect target system voltage and zero MVAR output/ input.

Lines #2 and #4 create a band from (Vref – 0.005 PU) and (Vref + 0.005 PU), or a system voltage within 0.005 P.U. of target voltage, a band within the generator should use it's full reactive capability to control voltage. Those reference points also define the buffer for voltage outside of +/- 0.005 P.U. requiring strong generator reaction as the voltage deviates more. Beyond a +/- 0.02 P.U. voltage deviation the generator is expected to be producing or consuming MVARs to within 2.5% of the Qmax or Qmin, respectively.

MVAR Capability

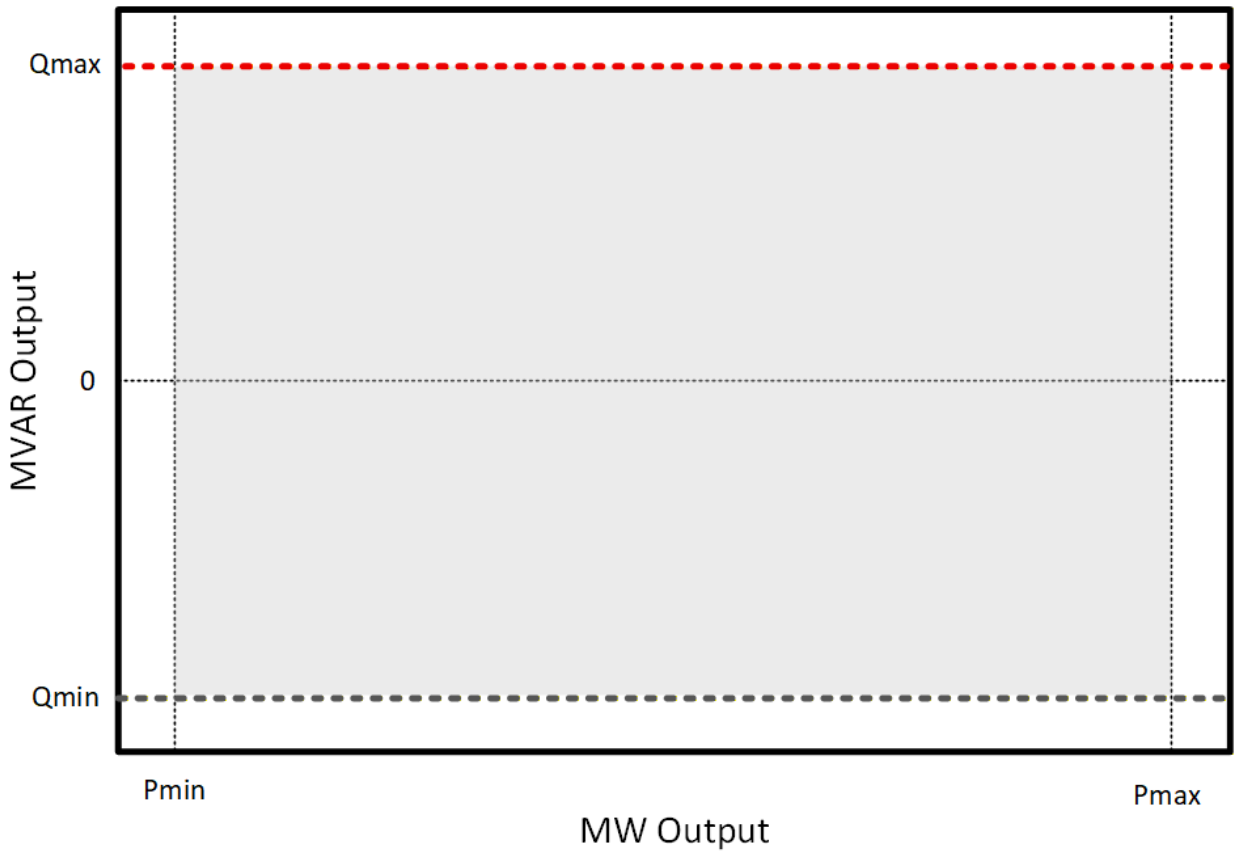

	Expected MVAR Range
Pmin	Unit Minimum MW Output Capability
Pmax	MFO (Max Facility Output) from Unit ISA or GIA
- - -	Qmax = Pmax * 0.3287
- - -	Qmin = Pmax * (0.3287) * (-1)

The Reactive Control Range by MW Output Graph 1 (Figure 7.1.2 B, above) expresses that generation should be able to use their full reactive capability from their power minimum to power maximum. The maximum range, bounded by Qmax and Qmin, is related to the maximum power of the unit and the required 0.95 power factor, leading and lagging, range required.

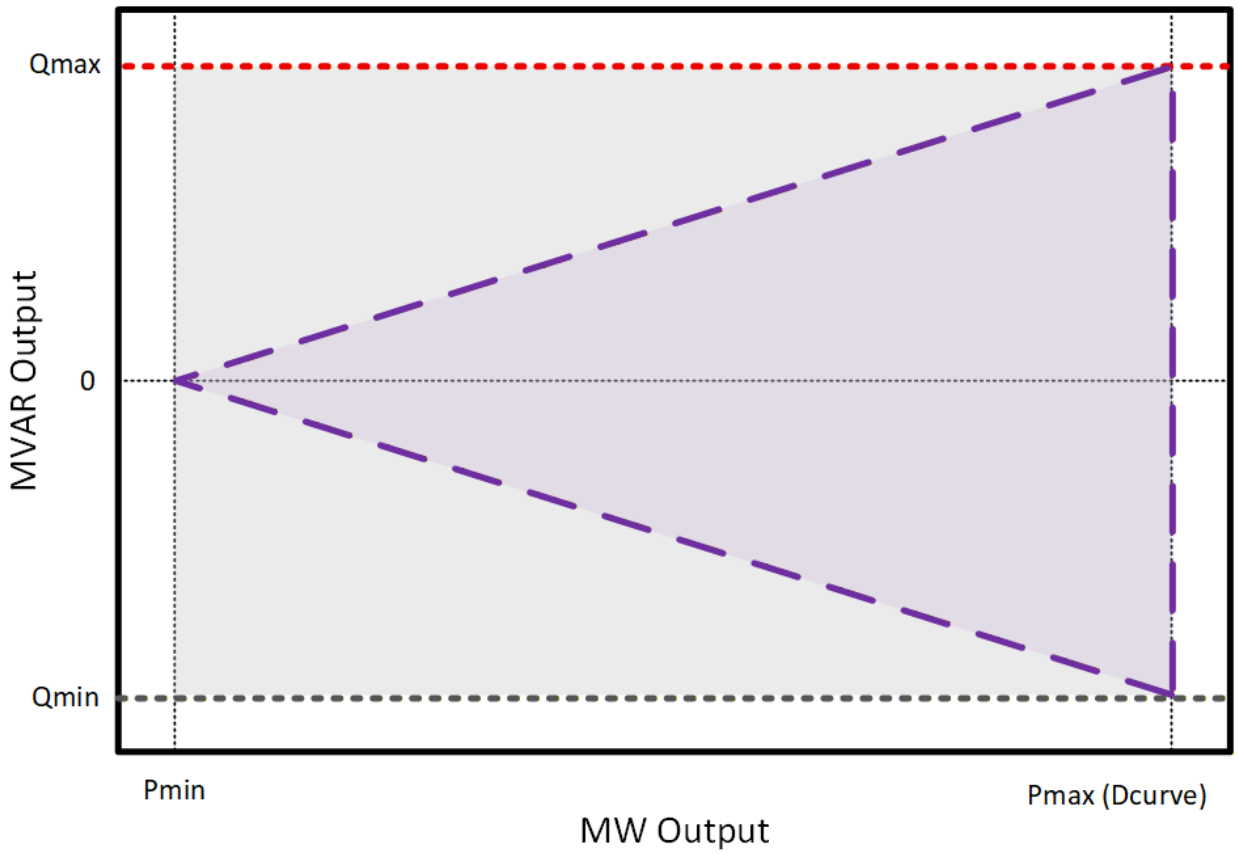

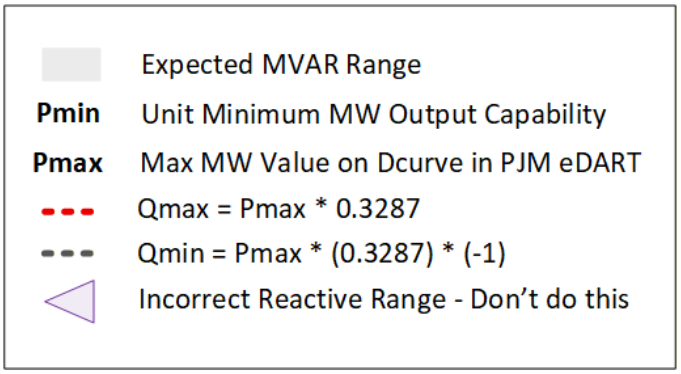

The Reactive Control Range by MW Output Graph 2 (Figure 7.1.2 C, above) expresses an incorrect interpretation of MVAR capability for MW output. This incorrect interpretation limits MW output, such that full reactive capability is only available near maximum output, and tapers to zero near minimum output. Limiting MVAR output to the shaded area is not sufficient to meet the requirement for reactive control range.

Enforcement

PJM may initiate a three-party investigation – between relevant TO/EDC, Gen Owner/Operator, and PJM – of apparent reactive control issues for any given gen unit. Although PJM may systematically analyze the reactive performance of the entire generation fleet, many factors must be considered before reaching conclusions, necessitating a case-by-case analysis approach. Those factors may include:

- AVR or other gen equipment limitations, short or long-term
- Voltage schedule exceptions (which may be requested by the TO and must be entered in eDART)
- ISA or GIA that deviates from the standard Tariff template
- Other documented exceptions (ex. legacy units that predate relevant standards)

PJM may ultimately direct generators to alter their reactive controls, including AVR settings or inverter settings, and work with the gen owners/operators to confirm successful resolution before closing the analysis. Critical issues that cannot be resolved via the investigative process may be referred to the appropriate governing entity, such as NERC or PJM legal, for further review.

Generation Owners must coordinate any voltage schedule issues (including stability, automatic voltage regulator and power system stabilizer outages) with PJM and the PJM Transmission Owner. In the event that automatic voltage regulating devices are out-of-service, the Generator shall provide manual voltage regulation to maintain the prescribed voltage schedule. The Generator must notify PJM and the Transmission Owner with as much lead-time as possible prior to performing all voltage regulator and power system stabilizer maintenance. Notifications of unplanned outages on automatic voltage regulators (AVR) and/or power system stabilizers (PSS) must be communicated to PJM verbally and via eDART and to the Transmission Owner as soon as possible but no later than within 30 minutes of the occurrence. If the status of the AVR or PSS has been returned to normal within 30 minutes of such change, then the Generation Owner is not required to notify PJM and the Transmission Owner. For modeling accuracy the provision of telemetered AVR and PSS status points by Generation Owners to PJM is preferred.

Note:
Typical operation of a Power System Stabilizer (PSS) is such that the Automatic Voltage Regulator (AVR) must be in service in automatic mode for the PSS to be operational. In addition, the PSS is typically enabled but not active until the unit achieves a predetermined power output. Notification to PJM for PSS outages shall be made when the AVR and/or PSS is manually disabled or when equipment malfunction results in the PSS being unable to operate normally.

When PJM determines that system conditions warrant a change, the Generator may be requested to deviate from the predetermined voltage or reactive power schedule. PJM may

direct a facility to operate in lead, lag, or unity power factor as long as the direction is within the unit's capability.

During an emergency, the Generator must participate in a voltage reduction declared by PJM and operate the facility at the voltage level requested by the Transmission Owner. Unless PJM requests a manual adjustment, the Generator must maintain the facility's automatic voltage regulator(s) in service during an emergency.

Note:
Refer to PJM Manual M-3, Transmission Operations, section 3.11 for additional information on Generator Voltage Schedules and Operations. Real-time criteria to exempt generators from following a voltage schedule within the defined bandwidth are detailed in Notes 2 and 3.

7.1.3 Notification to PJM for Reactive Power Resource Status during Unit Start-up

Generators may elect to operate their AVR in manual mode when synchronized and producing MW's during startup until minimum load is achieved (or during shutdown as applicable) in order to ensure overall unit stability (or based upon other physical equipment limitations). For those units that register as a Generation Owner in accordance with the NERC Statement of Compliance Registry Criteria, if PJM Dispatch received real-time notification of the generator start-up or shutdown no additional notifications to PJM regarding AVR status will be required unless the AVR is not returned to automatic mode once minimum load is achieved.

7.1.4 Generator Operation under Constrained System Conditions

Under normal conditions, each Generator limits its generating output to the value specified in the pre-scheduling information for that hour or to the value directed by the PJM control signal. However, when the system is constrained, PJM may direct the Generator to deviate from these values any time reliability principles and standards are violated.

Where practical, PJM will direct all non-cost measures to be implemented prior to requesting Generators to re-dispatch. Specific details concerning operation of the transmission system under constrained conditions can be found in the PJM Manual M-3 for Transmission Operations.

7.1.5 Generator Operation under Emergency Operating Conditions

Each Generator must limit its output to the value specified by its pre-scheduling information for that hour or to the value directed by PJM. PJM has the authority to direct deviation from the pre-scheduled values any time applicable reliability principles and standards are violated.

In order to maintain system reliability during emergency operations, it is critical that Generators respond to directives from PJM. Typical directives are outlined in the PJM Manual M-13 for Emergency Operations. Note that these directives may require a Generator to provide additional operational data required by PJM for supplementary system analysis.

In general, a Member's responsibilities during emergency operation include:

- Taking other actions, as requested or directed by PJM, to manage, alleviate, or end an emergency.
- Cooperating with each other and PJM to carry out the emergency procedures and to implement requests and instructions received from PJM for the purpose of managing, alleviating, or ending an emergency.
- Providing notification and other information to governmental agencies as appropriate.
- Collecting, storing, and providing data and other information to PJM to facilitate preparation of reports required by governmental or industry agencies as a result of an Emergency.
- Cooperating and coordinating with PJM and other PJM Members in the restoration of all or parts of the Bulk Electric System in the PJM Balancing Authority.

Additionally, a Generation Owner controlling the output of a Capacity Resource must take or arrange for any or all of the following actions, when directed by PJM, to manage, alleviate or end an emergency:

- Reporting the operating status and fuel situation.
- Canceling testing and maintenance.
- Reducing non-critical plant load.
- Directing personnel to unattended generation sites.
- Starting (including black-start) and loading generation, as directed.
- Reducing output to emergency minimum generation.
- Shutting down generation.
- Interrupting sales for delivery to loads outside the PJM Balancing Authority.
- Selling energy to other Balancing Authorities as requested during emergency conditions in other Balancing Authorities.
- Maintaining records of emergency actions taken and the results achieved.

During an emergency (as determined/declared by the Transmission Owner (TO) or by PJM) the Generator shall respond as promptly as possible to all directives from the TO or PJM. These directives may relate to actual or contingency thermal overload of electrical circuits or actual or contingency high/low voltage conditions.

The TO or PJM may also direct the Generator to:

- Increase or decrease the facility energy and/or reactive output
- Connect or disconnect the facility from the PJM electrical system, and/or
- Deviate from the prescribed voltage or reactive schedules.

If safety or system reliability conditions warrant, the TO may isolate the facility from the PJM electrical system without prior notice to the Generator or upon such notice as is possible under

the circumstances. The TO shall advise the Generator as soon as possible of any forced outages of the PJM electrical system that affect the facility's operations.

The Generator and PJM shall maintain communications and contact during all PJM or TO emergency operations. When the TO or PJM has determined that the emergency conditions have been alleviated, the TO or PJM shall inform the Generator and allow the facility to return to normal operations.

To safely restore the Transmission System following the outage of any facility, the facility isolated from the PJM electrical system shall be allowed to reconnect only under the direction of the TO or PJM. In all cases, the facility shall be made ready to return to service and provide energy to the PJM system as soon as possible.

Criteria for determining certain emergency conditions are reviewed in the following tables.

Capacity Shortage Procedures			
Condition	**Alert**	**Warning**	**Initiation**
Maximum Emergency Generation Alert	Requested in Operating Plan on prior day.		When demand is greater than highest normal bid.
Unit Start-up Notification Alert	Placing units in state of readiness		When anticipating shortage of operating capacity, stability issues or constrained operations for future periods.
Primary Reserve	Reserve is less than primary requirement.	Reserve is less than primary requirement but greater than spinning reserve.	
Load Management Curtailment			When generation is not available to meet forecast demand.
Voltage Reduction	Estimated reserve is less than forecast	Synchronized reserve less than	When load relief is needed to

Capacity Shortage Procedures			
Condition	**Alert**	**Warning**	**Initiation**
	spinning reserve requirement.	spinning requirement.	maintain tie schedules or relieve transmission constraints.
Voluntary Customer Load Curtailment	Forecasted reserve indicates a probable need for this action.		When earlier procedures have not produced needed load relief.
Radio / TV Appeal			When earlier procedures have not produced needed load relief.
Manual Load Dump		Reserves are less than largest contingency.	When earlier procedures have not produced needed load relief.
Deploy All Resources			For events that develop rapidly, requiring all generation and Load Management resources to be dispatched immediately.

Exhibit 9: Criteria for Determining Capacity Shortage Emergency Conditions

Light Load Procedures			
Condition	**Alert**	**Warning**	**Initiation**
Minimum Generation Advisory			Issued 1 to 2 days in advance to provide an informational

Light Load Procedures			
Condition	**Alert**	**Warning**	**Initiation**
			only notice that a Min Gen Alert/ Action is likely
Minimum Generation Alert	To provide alert that system conditions may require the use of emergency procedures		When expected generation levels are within 2500 MW of normal minimum generation limits
Compile report of Emergency Reducible Generation (ERG)			Prior to Light Load Period
Reduce all units to normal minimum generation			During the Light Load Period
Minimum Generation Emergency Declaration		To notify members further generation reductions are needed to meet the minimum load during the valley period.	At determination of PJM dispatcher
Minimum Generation Event		PJM declares event and requests percentage of ERG as needed (stepped process) to maintain system control	When utilization of ERG is necessary to match the decreasing load
Cancellation			Takes place in reverse order of implementation as

Light Load Procedures			
Condition	**Alert**	**Warning**	**Initiation**
			PJM load begins to exceed generation and actions taken are no longer necessary

Exhibit 10: Criteria for Determining Light Load Emergency Conditions

7.1.6 Black Start

The TO must have and maintain the capability and authority to perform system restoration using all generators that are included in their restoration plans. Voice communication between TO and generating facility, tolerant of major power system failures is the minimum requirement to achieve black start. Private communication systems on un-interruptible power supplies (UPS) and radio systems are examples of this type of system. The current satellite-phone voice communication from PJM to the TOs meets the minimum requirements for PJM-to-TO communication. The current PJM approach of communicating directly through the satellite (avoiding the ground station) is designed to be tolerant of major power system failures. Black Start Unit operators that store fuel onsite shall not permit their fuel inventory for Black Start Units to fall below 16 hours – if it falls below this level, unit operators shall notify PJM (via an email to BlackStart@pjm.com) and place the unit in Max Emergency. If the run hours for a Fuel Assured Black Start Unit fall below 16 hours or any equipment required for black start operation is limited for any reason, PJM should be notified (via an email to BlackStart@pjm.com) as soon as possible but must be notified within 24 hours of recognizing the limitation.

Specific details concerning procedures that PJM follows to ensure, monitor, and perform accounting for Black Start Service can be found in the PJM Manual M-10 for Pre-Scheduling Operations, PJM Manual M-12, Balancing Operations, and PJM Manual M-27, Open Access Transmission Tariff Accounting.

7.2 Switching Requirements

A Generator is responsible for switching all equipment it owns, operates, or controls. A trained person must be available within a maximum of two-hour notice for the purposes of performing switching. Specified devices isolating the facility from the Transmission System shall be switched by the Generator or the Transmission Owner (according to the configuration and contract) whenever requested by PJM. These devices must be locked if applicable and tagged to provide adequate safety.

The Generator's switching procedures shall at all times be followed precisely by the Generator and be closely coordinated between the Generator and the Transmission Owner. Either party (Generator or TO) must provide a written copy of in-effect switching procedures to the other party upon request.

If requested by the Generator, specified Transmission Owner devices shall be operated and tagged by the Transmission Owner according to the Transmission Owner's switching and tagging practices and safety rules. Transmission Owner switching and tagging practices and safety rules shall apply to all situations involving the Transmission Owner and any Generator personnel involved with Transmission Owner switching and tagging.

7.3 Critical Information and Reporting Requirements

Provide verbal notification to PJM Dispatch Operations at least 20 minutes prior to a change in state of each generating unit. This includes any changes to the output of a self-scheduled resource by more than 50 MW that are not following SCED basepoint, real or reactive power capability or any testing potentially affecting reliable unit operation, e.g. governor, AVR or PSS testing.

PJM is responsible for coordinating and approving requests for necessary outages of generation and transmission facilities. This assures the reliable operation of the PJM Balancing Authority. PJM maintains records of outages and outage requests for these facilities.

The procedure begins when a Generation Owner and/or an entity acting on their behalf submits an outage request via eDART. The outage request is recorded electronically and can be accepted or rejected by the PJM Dispatcher. Refer to the PJM Manual M-10, Pre-Scheduling Operations for information on the outage request procedure and request tracking via eDART.

Note:
For wind and solar Generating Facilities, an eDART ticket is required when the wind farm / solar park is unavailable or derated. Lack of wind or solar irradiance does not require an eDART ticket.

For Energy Storage Resources, an eDART ticket is required when the ESR is unavailable or derated. Charging or lack of charge does not require an eDART ticket.

For a Hybrid Resource, an eDART ticket is required when either component of the resource is unavailable or derated. No eDART ticket is required for lack of wind, solar irradiance, charging, nor lack of charge.

It is important to emphasize that PJM does not schedule or determine when outages should take place. PJM only accepts or rejects the requests for outages submitted by Members. It is the responsibility of each Generator to determine its own best schedule of outages.

Outage requests are honored by PJM on a first come-first served basis. Requests are rejected only when they affect the reliability of the PJM Balancing Authority.

Generation Owners that own transmission equipment such as circuit breakers, capacitor banks, etc., do not have the capability to submit outage requests on transmission equipment in eDART. As a result, for Reportable Transmission Facilities in each TO zone, the Generation Owner must notify the affected Transmission Owner who must then submit outage requests to PJM via eDART for this generation-owned equipment as soon as practical after they are informed of the outage. It is the responsibility of the Generation Owner to keep the Transmission Owner updated on the status of this equipment.

Generation Owners shall notify PJM verbally and via eDART of any scheduled or emergent conditions on common internal plant equipment, or external generator-owned switchyard equipment, which results in a single contingency that would cause an outage of multiple generation resources within a minute of each other. Examples of common mode conditions include, but are not limited to, station service transformer outages and switchyard configuration changes that result in multiple generation resources sharing one critical piece of equipment.

7.3.1 Planned Outage

A Generator Planned Outage is the scheduled removal from service, in whole or in part, of a generating unit for inspection, maintenance or repair with the approval of PJM. The Generator shall provide PJM with an outage request via eDART at least thirty days prior to performing planned maintenance of the facility, including turbine, generator, and boiler overhauls or inspections, testing, nuclear refueling, etc. Planned Outages usually occur during those seasons of the year when the peak demand on the power system is lowest and are not to be scheduled during the PJM Peak Period Maintenance Season.

When feasible, the Generator shall provide PJM with written notice of its intent at least thirty days prior to testing protective apparatus associated with generator interconnection facilities, including circuit breakers, relays and auxiliary equipment. PJM personnel or designated Transmission Owner personnel may observe such testing.

An additional notification to PJM and the Transmission Owner is required at least 20 minutes before the planned outage begins.

PJM may request the Generator to delay or reschedule the planned outage if system-reliability conditions warrant.

To the extent practical, PJM will provide to the Generator advance notice of PJM's intention to perform planned maintenance on reportable PJM transmission facilities that may affect the Generator's operations. Planned Outage requests for PJM Black Start Units require TO approval from the TO receiving the units Black Start service.

7.3.2 Maintenance Outage

A Generator Maintenance Outage is the scheduled removal from service, in whole or in part, of a generating unit in order to perform necessary repairs on specific components of the facility with the approval of PJM. A maintenance outage is an outage that may be deferred beyond the next weekend but requires that the generation resource be removed from service before the next Planned Outage. Characteristically, these outages may occur throughout the year, have flexible start dates, are much shorter than planned outages, and have a predetermined duration established at the start of the outage. The duration of these outages is normally limited during the PJM Peak Period Maintenance Season. Maintenance Outage requests for PJM Black Start Units require TO approval from the TO receiving the units Black Start service.

7.3.3 Unplanned Outage

A Generator Unplanned (Forced) Outage is an immediate reduction in output or capacity or removal from service, in whole or in part, of a generating unit by reason of an Emergency or threatened Emergency, unanticipated failure, or other cause beyond the control of the owner or operator of the facility. The Generator may not remove any equipment from service without prior notification to PJM and the Transmission Owner (TO) except in the case where equipment must be disconnected from the system without PJM approval to prevent injury to personnel or damage to equipment.

However, if the Generator has any advanced knowledge of an unplanned outage, the Generator shall notify the TO with as much lead-time as practical. For reliability reasons, the Generator shall notify the TO as soon as reasonably possible of the following:

- The starting time of the unplanned outage.
- The energy reduction resulting (or expected to result) from the unplanned outage.
- The estimated time the equipment incurring the unplanned outage is expected to return to service.
- The time the Generator equipment is actually returned to service.
- The reason for the outage.

For reliability reasons, generators must submit a record of the events and circumstances giving rise to the unplanned or forced outage in the form of a generator outage ticket to PJM as soon as practicable, but within one hour of the event . The Generator must also notify PJM of any unusual operating conditions which may result in the reduction of output or tripping of multiple generators offline.

In addition, the Generator must notify PJM of any system conditions, whether a result of equipment failure or mandated restrictions (plant, governmental, etc.), which may result in potential generation reduction or controlled shutdown of any generator. Also, any conditions which may affect the availability of a resource providing PJM Black Start Service must be reported to PJM.

Additional details regarding Planned, Maintenance, and Unplanned outages can be found in the *PJM Manual M-10, Pre-Scheduling Operations*.

7.3.4 Generating Unit Reactive Capability Reporting

Generating Unit Reactive Power is a primary method of providing voltage support on the PJM system. A lack of deliverable Generating Unit Reactive Power, which is relied upon to be available based on reported Reactive Capability, can result in PJM system reliability problems including voltage collapse. Whereas, proper reporting can result in controlled measures, such as generation adjustment in lieu of unanticipated load shedding to address inadequate Reactive Power Reserves. The following requirements are applicable only for units physically located within the PJM RTO footprint.

Generating Unit Reactive Capability is a measurement of the reactive power able to be delivered by a generating unit to the transmission system. It is defined by the MW versus MVAR points of a generator reactive capability curve (D-curve). To help maintain a reliable transmission system, each Generation Owner must provide capability curve information to PJM via eDART as soon as the information is available. The Transmission Owner for the Transmission Zone where the unit is located will be automatically notified via eDART, as well as any other Transmission Owners with eDART authority to receive automatic notification for the unit. For real-time changes, each Generation Owner should also notify PJM and the respective TO via phone. "Continuous Unit Reactive Capability Curve" data must be provided as follows via eDART:

- *Continuous Unit Reactive Capability Curve (required to provide)* - data that provides the realistic usable reactive output that a generating unit is capable of delivering to the PJM Interconnection and sustaining over the steady state operating range of the unit.

The PJM EMS Real-Time and Study Network Applications, Seasonal PJM Operating Studies, and PJM Planning Studies use Continuous Unit Reactive Capability Curves for actual pre-contingency steady-state analysis and for simulated post-contingency contingency ~~security~~ analysis.

The Generation Owner shall notify PJM as soon as practical, but within 30 minutes of any temporary unit performance issues, including reactive capability derates or status or capability change on any generator reactive power resource, such as the status of each automatic voltage regulator and power system stabilizer and the expected duration of the change in status or capability and a status or capability change on any other reactive power resources under the Generation Owner's control and the expected duration of the change in status or capability. If the unit's reactive capability or status of the AVR or PSS status has been returned to normal within 30 minutes of such change, then the Generation Owner is not required to notify PJM and the Transmission Owner. Separate notifications and eDART tickets are required for each automatic voltage regulator outage and each power system stabilizer outage.

The Generating Unit reactive capability determination should reflect planned unit modifications and real-time limitations caused by system voltages, unit transformer tap position setting,

temperature, operating conditions and restrictions, station auxiliary equipment, generator terminal bus voltage limitations, auxiliary bus voltages limitations, and operating procedure limits. There may be different limiting conditions for either leading or lagging reactive capability.

Planned modifications (tap changer adjustment, GSU replacements, turbine modification, etc.) that impact generator reactive capability should be communicated to the impacted TO and PJM as far in advance as possible but no later than the return of the unit from the outage. Changes should be communicated via eDART.

To ensure accuracy of generator reactive capabilities that may result from planned unit modifications, a critical input to PJM and Transmission Owner contingency ~~security~~ analysis packages, PJM requires that each Generation Owner review and confirm their unit reactive capability data via eDART on a bi-annual basis. PJM and the Transmission Owners should then verify accuracy of unit reactive capabilities modeled in their respective EMS systems. The bi-annual review periods are defined as follows:

- Pre-Summer Review: From April 1 through April 30, Generation Owners should review their unit reactive capabilities in eDART. From May 1 through May 31, PJM and Transmission Owners should review EMS reactive capabilities based on the updated data in eDART and make any applicable changes.
- Pre-Winter Review: From October 1 through October 31, Generation Owners should review their unit reactive capabilities in eDART. From November 1 through November 30, PJM and Transmission Owners should review EMS reactive capabilities based on the updated data in eDART and make any applicable changes.

See Attachment D for a detailed description of the PJM Generating Unit Reactive Capability Curve Specification and an explanation of the PJM Reactive Capability Reporting Procedures.

A reactive test shall be performed as soon as practical following any planned upgrades which impact a unit's reactive capability. Estimated or calculated reactive capability data (D-curve) must be provided as an interim measure until a reactive test can be performed.

PJM requires periodic verification of reactive capability via real-time testing. See Attachment D for PJM Generating Unit Reactive Capability Curve Specification and Reporting Procedures and Attachment E for a detailed description of the PJM requirements for Generator and Synchronous Condenser Reactive Capability Testing.

7.3.5 Fuel, Emissions and Operational Data Reporting

Background and Intent

PJM requires all generation resources to provide necessary operational data so that PJM can make the decisions that maintain system reliability. PJM needs certain operational data including but not limited to, unit fuel reserves, emissions limitations, ambient temperature operating limits, wind speed cutoff for wind turbines, and other operational data for PJM to meet its compliance obligations as a Balancing Authority. This is especially true during periods of

severe weather and/or times when there are external fuel constraints (e.g., coal strike, oil embargo, gas pipeline interruptions, etc.).

PJM's authority to require all Generation Owners to provide operational data is found in the PJM Operating Agreement (Sections 11.3 Member Responsibilities, 11.3.1 General, and definition of Emergency, line ii) and referenced in the NERC Reliability Standards, such as EOP-11, Emergency Preparedness and Operations, TOP-003, Operational Reliability Data, and IRO-008, Reliability Coordinator Operational Analyses and Real-time Assessments.

PJM will, upon the issuance of all operational data requests, provide members with clear guidance on the criticality of these requests to assist with effective prioritization of the required responses.

Seasonal Fuel and Emissions Reporting

Prior to the start of each winter season, PJM will notify and request from all members with generation resources, a report of fuel and emission information by generating unit. This data request will be issued via eDART and will require information such as, but not limited to, each unit's:

- available primary fuel
- available secondary fuel
- projected fuel inventory (in terms of MWh)
- typical fuel inventory (in terms of MWh)
- average amounts of fuel per delivery (in terms of MWh)
- delivery frequency
- fuel supply and transportation contractual arrangements
- run time limitations due to environmental/emission restrictions
- Generating Facility minimum design temperature
- etc.

While some of this data may represent broad projections, it will assist in providing a baseline that can be compared to data submitted in the real-time reporting process to assist in determining the severity of specific emergency conditions and allow PJM to better prepare for potential contingencies.

Periodic Fuel and Emissions Data Request

Depending on the severity of the weather forecasts, projected fuel availability, responses to the Seasonal Fuel and Emission Data Request or other reasons, PJM may request on a periodic basis (such as monthly or as-needed) updated responses to the Seasonal Fuel and Emission Data Request questions for all or a subset of units. This information is intended to assist in the Operations Planning Process. These Periodic Data Requests will be issued via eDART.

Real-Time Reporting

A unit is considered a resource limited when it is not capable at running at its maximum capacity for the next 72 hours. If a unit has less than 72 hours of run time at maximum capacity due to any resource limitation (primary or alternate fuel, emissions, demineralized or cooling water, other consumables), it should be reported to PJM through the “Resource Limitations” page of the PJM Markets Gateway system.

Communication about resource limitations is especially critical when PJM issues a Cold Weather/Hot Weather Alert or Cold Weather Advisory.

When PJM issues a Cold Weather Advisory as defined in Manual 13: Emergency Operations, Section 3.3~~1.1~~, Generation Owners or designated agents shall update eDART / Markets Gateway with unit specific resource limitations associated with cold weather preparedness and operations, including:

• Generator capability and availability

• Fuel supply and inventory concerns

• Start-up issues

• Fuel switching capabilities

• Environmental constraints

• Generating Facility minimum design temperature

Additional information can be communicated to PJM with an Informational eDART Ticket if needed.

Additional details about the “Resource Limitations” page of Markets Gateway can be found in the Markets Gateway User Guide. The information on the “Resource Limitations” page is used for situational awareness and multi-day operations planning. The parameters entered on this page are not utilized in the PJM Day Ahead or Real Time Market clearing engines.

Any unit with less than 24 hours of run time remaining due to resource limitations should also update the Max Run fields in Markets Gateway.

Refer to PJM Manual for Emergency Operations M-13, Section 6.4 Resource Limitation Reporting for additional information on Real Time Reporting.

7.3.6 Generation Owner Periodic Tasks and Data Submittals

In order to assist PJM Generation Owners with managing the various tasks, testing, and data submittals required by PJM, a summary guideline document has been created. The guideline

does not modify any obligations. It is titled *Guideline: Generation Owner Periodic Tasks and Data Submittals*, and posted on PJM website at : https://www.pjm.com/~/media/documents/manuals/manual-links/m14d/go-periodic-tasks.ashx

7.4 Synchronization and Disconnection Procedures

The Generator must obtain approval from PJM at least 20 minutes prior to synchronizing the facility to, or disconnecting the facility from, the PJM electrical system. In addition, the Transmission Owner must be notified when synchronizing or disconnecting from the Transmission Owner's system. The only exception is when equipment must be disconnected from the system without PJM approval to prevent injury to personnel or damage to equipment. If the disconnection occurs without prior PJM approval, the Generator shall immediately notify PJM and the TO as to the cause, energy reduction, and the expected return time. The Generator must notify PJM prior to attempting a restart if the unit was operating for PJM and tripped or was scheduled to operate for PJM and failed to start. PJM will then assess if the unit should be restarted for system reliability or economics and notify the Generator.

The Generator must keep the TO and PJM dispatchers informed at all times of the facility's availability or any change in status. Additional requirements appear in the PJM Manuals for Pre-Scheduling Operations M-10, Energy & Ancillary Services Market Operations M-11, Balancing Operations M-12, and Control Center and Data Exchange Requirements M-01.

The facility shall normally be operated with all protective relays (primary or back-up) in service whenever the facility is connected to, or operating in parallel with, the PJM electric system. The facility may operate for a limited time to perform maintenance with one set of redundant relaying in service. PJM and the Transmission Owner shall be notified of such occurrences.

7.5 Cold Weather Generation Resource Preparation

Welcome to the Cold Weather Generation Resource Preparation section of the PJM Manual for Generator Operational Requirements. In this section you will find the following information:

- Description of the Generation Resource Operational Exercise.
- Usage of the Generation Resource Cold Weather Checklist.

7.5.1 Generation Resource Operational Exercise

In preparation for winter operations, PJM recommends that Generation Owners self-schedule any of their generation resources that have not operated in the 8 weeks leading up to December 1st to determine whether they are capable of reliably operating on both primary and alternate fuel and responding to PJM's dispatch instructions. PJM prefers resources to self-schedule in the day-ahead market, but tests can also be conducted in real-time if approved by PJM Dispatch with appropriate notice.

This exercise should be conducted during the month of December, when temperatures are forecasted to be 35 degrees or to assist in identifying and correcting start-up, operational, and fuel switching (if applicable) problems. An informational eDART ticket with a cause of "Cold Weather Preparation Exercise" should be submitted by the generation resource owner documenting that the generation resource has been scheduled to operate under the cold weather operational exercise.

7.5.2 Generation Resource Preparation and Cold Weather Checklist

Attachment N of this Manual (M14D) contains the PJM generation resource Cold Weather Preparation Guideline and Checklist. This Checklist, or a similar one developed and maintained by the Generation Owner, shall be used annually by all generation resources, to prepare its generation resources for extreme cold weather event operation. This should be done prior to the local National Oceanic and Atmospheric Administration (NOAA) first frost date.[1] Between November 1st and December 15th of each year, the Generation Owner's representative shall then verify via eDART that the represented generation resources have completed the items on the checklist.

7.6 Generation Operational Testing

All Generation Capacity Resources, with the exception of Variable Resources, that are committed in RPM or committed in a FRR Plan shall be subject to operational testing initiated by the Office of the Interconnection up to two times in each of the summer and winter seasons during the relevant Delivery Year. For purposes of this testing, summer season is defined as May – October and winter season is defined as November – April.

7.6.1 Resource Selection for Testing

The selection of Generation Capacity Resources and the timing of an Operational Test shall be determined at the discretion of the Office of the Interconnection, and may consider a number of factors, including but not limited to: the period of time since a unit last operated, the system conditions under which the unit has recently operated, the expected system conditions during the operational test, and the recent performance of units with respect to successfully starting and operating within the specified parameters when scheduled by the Office of the Interconnection. Such tests will evaluate resource performance against operating parameter limits of the available schedule that the Office of the Interconnection selects for purposes of testing the resource.

There is no requirement for PJM to test all resources each season of each Delivery Year. Variable Resources (e.g., wind, solar, run of river hydro without storage, landfill gas units without an alternate fuel source) are exempt from the Generation Operational Testing.

[1] https://www.nerc.com/comm/RSTC_Reliability_Guidelines/Reliability_Guideline_Generating_Unit_Winter_Weather_Readiness_v4.pdf

7.6.2 Test Notification

Generation Operational Tests will be unannounced tests. PJM system operators will call resources to inform them that a Generation Operational Test is being initiated without advance notice. Resources will be committed in real time and not in the day ahead market. PJM will utilize the offer parameters on the selected schedule to evaluate resource performance on the test. Resources undergoing the initial Generation Operational Test will be eligible for make whole (in accordance with OATT, Attachment K-Appendix, section 3.2.3(e)), reserves, and to set LMP.

7.6.3 Test Evaluation Criteria

The Time to Start (Notification Time + applicable Start-Up Time) and Minimum Run Time parameters of the selected schedule (based on operating fuel type and temperature state of unit) will be used to measure test performance. Once dispatched online, resources will be measured against the following criteria:

1. Time from resource commitment to unit breaker close must be less than or equal to [(Notification Time + Start Up Time) + greater of (10 min or 0.1*(Notification Time + Start Up Time)]
2. Resource must operate for at least the Minimum Run Time as specified in the selected schedule

If the resource fails to meet any of the above criteria it will be deemed as a failed Generation Operational Test. PJM will notify Market Sellers of the test results prior to any potential retest. There is no penalty provision for failure of the initial test.

7.6.4 Re-test Process

Resources that fail the initial Generation Operational Test may be subject to a re-test (within the same season) at PJM discretion when the resource is made available for scheduling. Any re-test is considered to be part of the same operational test and does not count as a second test initiated by the Office of Interconnection for the relevant season. Any re-test will follow the same process and testing criteria as outlined in Section 7.6.2 and 7.6.3. Resources conducting a retest will not be eligible for make whole but will be eligible for reserves and to set LMP.
If the resource fails the test evaluation criteria for the re-test and does not start and synchronize to the grid during the same day of the re-test, a daily Generation Capacity Resource Operational Test Failure Charge shall be assessed on the date of the failed re-test and end on the date the resource successfully starts and synchronizes to the grid. The resource is not required to meet the test evaluation criteria in Section 7.6.3 to stop the charge. The minimum duration for the charge is two days. If the resource successfully starts and synchronizes to the grid on the same day as the failed re-test, no charge would apply. Resources may self-schedule with PJM's approval to stop the charge following a failed re-test.

Generation Capacity Resource Operational Test Failure Charge details can be found in PJM Manual M-18, sections 8 and 9.

Section 8: Wind Farm Requirements

Welcome to the Wind Farm Requirements section of the *PJM Manual for Generator Operational Requirements M-14D*. In this section you will find the following information:

- Description of wind farm data requirements.
- Description of PJM wind power forecasting service.
- Refer to Attachment L, Jointly Owned Resource Communication Model and Attachment M, Wind and Solar Unit Dispatchability Check List for additional wind farm requirements.

8.1 EMS Data Exchange

The PJM SCADA system allows PJM to communicate directly with individual generators or Generation Control Centers. A data concentrator (e.g. Remote Terminal Unit, Generation Management System, etc.) is located at the Member's site, and, after collecting data from the industrial metering equipment, communicates with PJM's SCADA system using either DNP (Distributed Network Protocol) or ICCP (Inter-Control Center Protocol) consistent with PJM Control Center Requirements Manual (M-01).

Every generator interconnected with and synchronized to the transmission system must at all times coordinate operation with PJM and the Transmission Owner, providing all necessary and requested information and equipment status, to assure that the electrical system can be operated in a safe and reliable manner. Attachment L, Jointly Owned Resource Communication Model defines coordination models that are considered acceptable.

This coordination includes, but is not limited to:

- Supplying low-side generator net-MW and MVAR output.
- Supplying meteorological data (wind speed, wind direction, temperature, pressure and humidity).
- Scheduling the operation and outages of facilities including providing advanced notification.
- Coordinating the synchronization and disconnection of the wind farm with PJM and Transmission Owner.
- Coordinating the dispatching of a generation unit utilizing the wind "curtailment indicator."
- Providing data required to operate the system and to conduct system studies.
- Providing documented start-up and shutdown procedures including ramp-up and ramp-down times.
- Following PJM-directed plant operation during emergency and restoration conditions.
- Following PJM-directed operation during transmission-constrained conditions.

All data items, regardless of type, are collected and disseminated at a frequency of 10 seconds or less.

Each PJM Member is responsible for determining data-quality indicators for all data transmitted to PJM. Both failed individual values and any value calculated using a failed point must be flagged. When a point fails for an extended period, a manual update of the point's value may be necessary to keep the data as accurate as possible. The generator shall communicate the outage of any data communication equipment connecting the facility to PJM Dispatch.

8.2 Wind Farm Data Requirements for Wind Power Forecasting

PJM's wind power forecaster requires data points from the wind farms to accurately forecast the wind power. The following are the data requirements for wind farms:

8.2.1 Data Requirements for Wind Forecast Set Up

The wind farms are required to provide the following data points for each turbine as part of their initial set up, and whenever any changes to the set up (e.g. turbine upgrades) occur, so they can be properly modeled within the wind power forecasting tool. The data listed below must be updated and provided to PJM in the event of a wind farm rebuild/repower.

- General turbine information
- Class of turbine
- Capacity of turbine
- Power generation threshold rates (i.e. minimum / maximum wind speed)
- Manufacturer power curves of individual wind turbines
- Geographic location (decimal degrees longitude and latitude) of wind farm site or each turbine if available.
- Hub height of wind power facility
- Aggregate historic data (measured MW output, outage information, and wind speed at hub height) for existing facilities that connect to PJM Transmission or bid into the PJM market.
- Information regarding operating capabilities during extreme cold weather operations, including ambient temperature and wind speed operating limits and descriptions of cold weather packages, icing detection and de-icing technologies and procedures, triggers for initiating forced outages, etc.

Note:
Aggregate Reactive Capability Curve (D-curve) is required to ensure accuracy of PJM's EMS Contingency ~~Security~~ Analysis results.

8.2.2 Aggregate Real Time Output

The wind farms are required to provide the real time aggregate wind farm MW output along with other data points. This output should be telemetered at low-side and high side-net of the wind farm.

8.2.3 Real Time Meteorological Tower (or mutually agreed upon alternative source)

The wind power forecasting accuracy is highly dependent on the availability of the real time meteorological tower data for tuning the forecaster model. Each wind farm must install at least one meteorological tower (or use data from selected turbines' anemometer and wind vane) in the farm and provide real time meteorological data to PJM through ICCP or DNP link. Depending upon the topology and the accuracy of the wind power forecast, PJM may request addition of more meteorological towers at a wind farm site.

The height of the meteorological tower should be same or close to the hub height of the wind turbine. The generation owner should calibrate and check the accuracy of the met tower every year as per standard.

The meteorological data shall include the following parameters:

Parameter	Units	
Wind Speed	meters/second	Required
Wind Direction	decimal degrees from true north	Required
Temperature	degrees Fahrenheit	Required
Pressure	Hectopascals	Required
Humidity	percent	Accepted

8.2.4 Generator Outage Reporting (Aggregate Turbine availability)

PJM is responsible for coordinating and approving requests for outages of generation and transmission facilities, as necessary, for the reliable operation of the PJM RTO. PJM maintains records of outages and outage requests for these facilities.

The electronic Dispatcher Application and Reporting Tool (eDART) provides communication with PJM for Generation Owners regarding unit outage requests, updates to reactive capability curves (D-curves), and AVR statuses. Additional applications may be integrated in eDART in the future. User registration is available from the PJM Web site.

In eDART, a wind farm is modeled as a single unit with a capability equal to the sum of all turbines at full manufacturer's nameplate MW rating. Wind farm aggregate turbine outage/ derate information is required to validate and enhance the accuracy of the wind power forecast.

Generation owners should not provide outage tickets related to wind speed since specific turbine parameters will be modeled within the forecast tool.

See the PJM Manual for Pre-Scheduling Operations (Manual 10) Section 2 Outage Reporting for the outage reporting requirements.

Note:
Due to the impact of planned/unplanned turbine outages on wind power forecast accuracy, wind and wind inclusive hybrid resources shall report any outage of one megawatt or more with duration of one hour or longer. Outages shall be submitted on aggregate plant capacity by outage type.

8.2.5 Grid Capacity Limit (Constraints or Economic Curtailments)

PJM is responsible for capturing congestion and economic curtailment directives and providing the data as inputs into the wind power forecasting tool.

8.2.6 Wind Power Forecast

PJM will collect the wind turbine/farm locations' real-time aggregate power output and meteorological data from the wind farms. The data will then be sent to the wind power forecaster along with wind farm curtailment/outage information. All data shared with the wind power forecast vendor is treated as confidential. The wind power forecaster will collect all of the data from PJM and other outside sources, such as global and regional weather forecasts, and after processing the data will send PJM the wind power forecast and all associated data for the individual or aggregate wind farms as designated by PJM.

PJM does two different types of forecasts for each individual or aggregate wind farm. All the examples consider the current time to be T.

1. Five Minute Forecast (T + 6 hours): Update wind power forecast with a frequency of every ten minutes and forecast interval of five minutes for the next six hours (6) for the individual or aggregate wind farms as designated by PJM.
2. Hourly Forecast ((T + 168 hours: Update wind power forecast with a frequency and interval of every hour for the next one hundred sixty eight hours(168) for the individual or aggregate wind farms as designated by PJM.

8.3 Forecast Data Usage

8.3.1 Real-time Reliability Assessment

PJM will use the Five Minute wind power forecast to evaluate current day congestion and to ensure that sufficient generation resources are available to respond to real-time or projected fluctuations in wind power output.

8.3.2 Day-ahead Reliability Assessment

PJM will use the Hourly wind power forecast to predict day-ahead congestion and mitigating strategies and to ensure that sufficient generation resources are scheduled within PJM to meet forecast load, transaction schedules and PJM reserve requirements. PJM may choose to use the updated version of the day-ahead wind power forecast provided by the forecaster after 1700 hours and before 1800 hours.

The Hourly wind power forecast may also be used to analyze weekend or long holiday conditions.

8.3.3 Real-time Operating Reserve Settlement

PJM will use the wind power backcast in the calculation of Lost Opportunity Cost for wind resources and applicable hybrid resources in real-time. Real-time meterological data values sent to PJM (described in 8.2.3) cannot be static or flat-lined and must be within reasonable limits. Further detail on the calculation can be found in Manual 28.

Section 9: Generator Deactivations

Welcome to the *Generator Deactivations* section of the *PJM Manual for Generator Operational Requirements.* In this section you will find the following information:

- Description of the PJM deactivation process (see *"Generator Deactivation Process"*).
- Methodology for compensation to Generators required to remain in service for reliability (see *"Compensation to Generators Requested to Remain in Service for Reliability"*).
- An exhibit showing the process flow diagram for generator deactivation.

9.1 Generator Deactivation Process

This section reviews the steps and timeline for the PJM generator deactivation process, and the potential results of the process. This section also reviews the methodology of compensation to generators requested to remain in service for reliability.

9.1.1 Generator Deactivation Notice

Any Generation Owner, or designated agent, who wishes to retire a unit from PJM operations must initiate a deactivation request in writing to the Office of the Interconnection via the email address generatordeactivation@pjm.com.

Notice of Receipt of Deactivation Date:	Deactivation Date may be no Earlier than:
January 1 - March 31	April 1 of the following calendar year
April 1 - June 30	July 1 of the following calendar year
July 1 - September 30	October 1 of the following calendar year
October 1 - December 31	January 1 of the second following calendar year

Units that don't participate in RPM due to deativation must provide notice consistent with the existing RPM must offer process.

Black Start Units require one year's advance notice of deactivation to PJM Refer to PJM Manual 12, Balancing Operations, Section 4.6.9 for additional details.

A Deactivation Notice will include, at a minimum, the following information:

- Indication of whether the unit is being retired or mothballed;
- The desired date of deactivation; and
- If mothballing, a good faith estimate of the time period the generating unit will be out of service.

The Office of the Interconnection will notify PJM Planning, PJM Law Department, PJM Markets, PJM Operations, and the Independent Market Monitor. PJM will also notify the appropriate Transmission Owner(s) of the request with the agreement of the Generation Owner or designated agent. PJM will initiate preliminary analysis of the request.

Note that only official requests to deactivate a unit are subject to the following procedures and timelines. All official requests including actual correspondence (letters, emails) are subject to public posting on the PJM Web site. Any requests to analyze potential retirements will be treated as unofficial requests, and the PJM deactivation process will not begin until an official public request is received.

9.1.2 Deactivation Analysis

PJM Planning will perform deactivation analyses, if required, four times per year commencing: (a) January 1; (b) April 1; (c) July 1; and (d) October 1. PJM Planning will include standard RTEP and NERC criteria for the appropriate seasons and interim years up to the current RTEP period. PJM Planning will also coordinate with PJM Operations for operational concerns and interim operational measures. In addition, the Independent Market Monitor will analyze the effects of the proposed deactivation with regard to potential market power issues.

Notice of Receipt of Deactivation Date:	Analysis of Commencing Date:
January 1 - March 31	April 1 of the same calendar year
April 1 - June 30	July 1 of the same calendar year
July 1 - September 30	October 1 of the same calendar year
October 1 - December 31	January 1 of the same calendar year

9.1.3 Analysis Results

The analysis has the following potential outcomes: (1) No reliability or market power issue identified, (2) reliability issue identified, (3) market power issues identified, or (4) combined reliability and market power issues identified. PJM will notify the Generation Owner, or its designated agent, of analyses results by:

Notice of Receipt of Deactivation Date:	PJM Provides Analysis Results by:
January 1 - March 31	May 31 of the same calendar year
April 1 - June 30	August 31 of the same calendar year
July 1 - September 30	November 30 of the same calendar year
October 1 - December 31	February 28 of the same calendar year

No Reliability or Market Power Issue Identified

- If no reliability or market power issue identified, the generator can retire as soon as practicable.
- Black Start Units forego any future Black Start revenues per the PJM Tariff. If the unit is a black start resource, PJM will identify feasible alternative sites, and request tariff based bids to replace black start. A bid to re-power (improve) existing resource will be considered. The lowest cost replacement black start resource will be selected.

Reliability Issue(s) Identified

- Consistent with the schedule set forth in this section 9.1.3, PJM will notify the Generation Owner, or its designated agent, if a reliability issue has been identified. This notice will include the specific reliability impact resulting from the proposed deactivation of the unit, as well as an initial estimate of the period of time it will take to complete the Transmission upgrades necessary to alleviate reliability impact.
- Within 30 days of PJM's notification of reliability issues, Generation Owner, or designated agent, will notify PJM of decision to continue to operate. If continuing to operate, the notice must include an estimate of investment costs and outage time to complete.
- Within 45 days of PJM's notification of reliability issues, PJM will provide a revised estimate of the timeframe for completion of transmission upgrades necessary to alleviate reliability impact.
- Within 60 days of PJM's notification of reliability issues, PJM will inform the Generation Owner, or designated agent, and post on its web site full details of the transmission upgrades that will be required in order to allow the unit to deactivate.
- Black Start Units will forego any future Black Start revenues per the PJM Tariff. If the unit is a black start resource, PJM will identify feasible alternative sites, and request tariff based bids to replace black start. A bid to re-power (improve) existing resource will be considered. The lowest cost replacement black start resource will be selected.

Market Power Impact Identified

If the IMM identifies a Market Power Issue consistent with the schedule set forth in section 9.1.3, the IMM will notify PJM and the Generation Owner. Mitigation of Market Power Issues will be resolved by the IMM. IMM Market Power documentation will be posted to PJM.com following the completion of analysis.

Combined Reliability and Market Power Issue Identified

If both reliability and market power issues are identified, the requirements and actions described above under the "Reliability Issue Identified" and "Market Power Impact Identified" sections apply.

9.2 Compensation to Generators Requested to Remain in Service for Reliability

Upon receipt of notification from PJM that a generating unit will be requested to operate past its desired deactivation date, the Generation Owner may file with FERC for full cost recovery associated with operating the unit until it may be deactivated. The cost calculations may be reviewed with PJM prior to filing at the election of the Generation Owner.

In the alternative, the Generation Owner, or its designated agent, may choose to receive avoided cost compensation according to the Deactivation Avoidable Cost Credit in Part V of the PJM Tariff. Avoidable expenses are incremental expenses directly required for the operations of a unit proposed for deactivation. The two major components to the avoid cost formula contained in the Tariff are:

- Categories of costs that are avoidable expenses
- Limited amount for necessary investment to keep unit in operable condition

Avoidable expenses do not include variable costs recoverable under cost-based offers to sell energy in PJM Interchange Energy Market. Additional investment over and above the limited component in the avoided cost formula must be filed as a separate rate. All inquiries regarding avoidable expenses are to be directed to the PJM Market Monitor

If the Generation Owner, or designated agent, chooses the compensation according to the Deactivation Avoidable Cost Credit in Part V of the PJM Tariff, compensation to the generator will begin as of the day following the filing, and will be net of revenues from the PJM markets. All revenues from the PJM markets and unit-specific bilateral contracts will be net of marginal cost of service recoverable under cost-based offers to sell energy from operating capacity of the PJM Interchange Energy market, not less than zero

- A 110% multiplier will initially be applied to the avoidable costs, and this multiplier will increase in future years. Applicable adders for future years are detailed and defined in Part V of the PJM Tariff.
- A 110% multiplier will also be applied to the cost of necessary investments to keep the unit in operable condition; however, this multiplier will not increase in future years.

Costs (avoidable cost rate minus net revenues) will be allocated as an additional transmission charge to the zone(s) for which the Transmission Owner(s) will be assigned the cost of the transmission upgrade.

If a Generation Owner, or designated agent, chooses to file for full cost of service with FERC, PJM begins crediting the generator the amount approved by FERC, on the timeline ordered by FERC as part of the approval. PJM also allocates the costs associated with these credits according to FERC order.

The following exhibit displays the generation deactivation process flow:

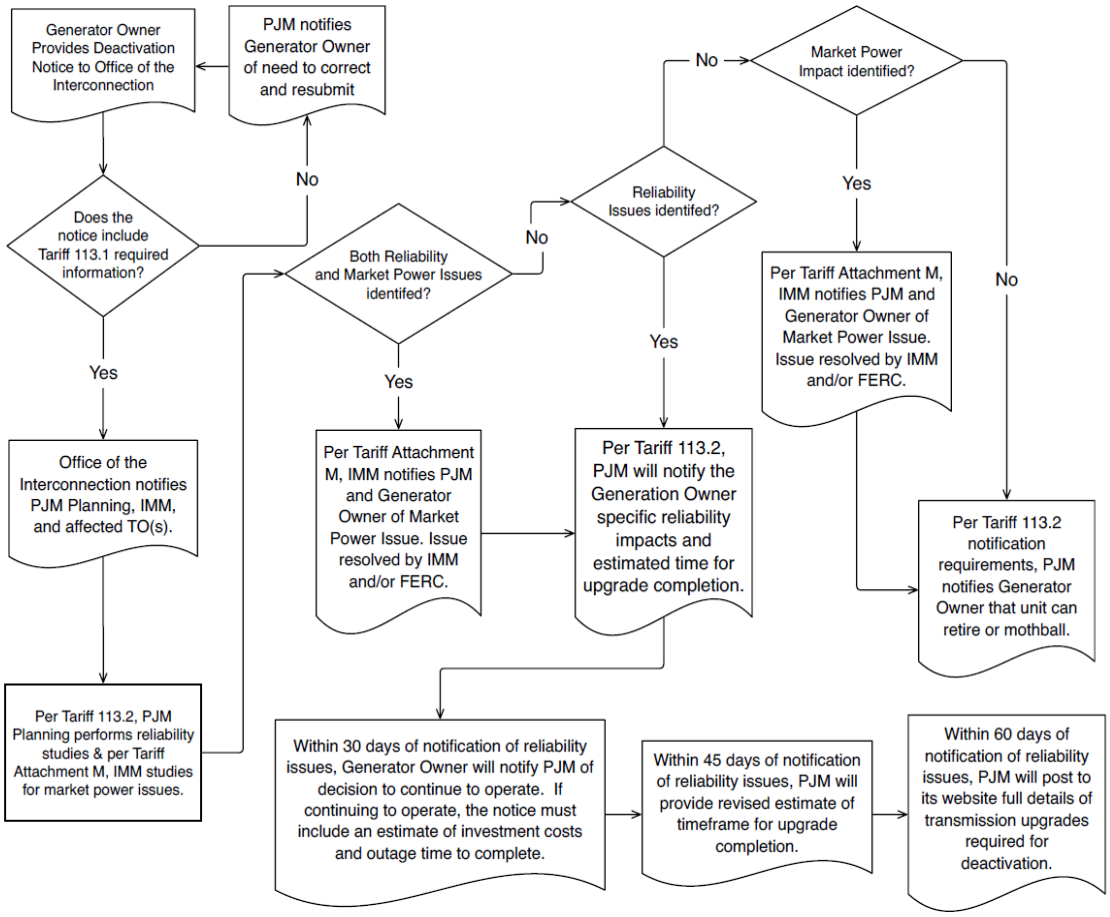

Exhibit 11: Generation Deactivation Process Flow

9.3 Transparency Into Estimated Generation Deactivation Charges

In order to provide transparency into the generator deactivation charges that may be assessed to responsible parties over the life of a Reliability Must Run (RMR) Agreement, Market Sellers with units under an RMR agreement must provide PJM and the IMM with estimates of the costs to be recovered over the term of the RMR agreement.

Estimates of the costs to be assessed in each month for the remainder of the RMR Agreement term shall be provided to PJM and the IMM at the intervals specified below. The estimated costs may exclude variable production costs and offsetting market revenues.

PJM will post the estimates, including but not limited to the following information, at the intervals specified below to the PJM website using the information provided by the Market Seller and

PJM's estimation of how cost responsibility for the RMR Agreement will be allocated across responsible zones.

- Total monthly fixed costs
- Total monthly project investment costs
- Zonal cost allocation percentage
- Zonal rate ($/MW based on estimated zonal NSPL)

To the extent the estimated zonal ccost allocation percentages are not available at the time of the initial posting, the zonal cost allocation percentage and rate will be omitted from the initial posting.

Initial Estimates

For units utilizing the Cost of Service Rate compensation method specified in Section 119 of Part V of the PJM OATT, such estimates must initially be provided to PJM and the IMM within one month after FERC acceptance of the initially proposed cost of service rate, including circumstances when FERC's acceptance of such rate is subject to refund and the outcome of hearing and/or settlement judge procedures. PJM will then post the estimated zonal RMR rate within a month of receiving the estimates.

For units utilizing the Deactivation Avoidable Cost Credit compensation method specified in Section 114 of Part V of the PJM OATT, such estimates must initially be provided to PJM and the IMM at least three months prior to the month in which cost recovery under the RMR arrangement will begin. PJM will then post the estimated zonal RMR rate within a month of receiving the estimates.

Ongoing Estimates

Market Sellers must provide updated estimates for each month in the remainder of the RMR term for each unit receiving compensation under an RMR arrangement on a semi-annual basis by May 1 and December 1 of each year. PJM will then post updates to the estimated monthly costs to be allocated to each zone by the end of the following month (June and January, respectively).

Section 10: Black Start Generation Procurement

Welcome to the *Black Start Generation Procurement* section of the *PJM Manual for Generator Operational Requirements.* In this section you will find the following information:

- Description of the PJM black start selection process.
- Description of the PJM incremental black start RFP process.
- Description of the PJM Reliability Backstop process.

10.1 Black Start Selection Process

The following section outlines the PJM Black Start selection process.

Note: Black Start information is Critical Energy Infrastructure Information (CEII) and Member Confidential and should be protected against disclosure to third parties.

10.1.1 Frequency

PJM will issue a RTO-Wide RFP for Fuel Assured Black Start generation and Black Start generation every five years, to align with PJM's obligation under NERC Standard Emergency Preparedness and Operations EOP-005, Requirement 6 to perform Black Start studies every five years. The RTO-Wide RFP is open to any resource interested in providing Black Start Service. Resources currently participating in PJM's Black Start Service do not need to respond to the RTO-Wide RFP and are expected to continue to provide Black Start Service unless the resource has requested additional Black Start capital cost recovery from PJM under the PJM Tariff. The first five-year selection process will result in Black Start solutions that will be effective as of 4/1/2015. Black Start solutions from subsequent five-year selection processes will be effective on April 1 each five years thereafter.

10.1.2 Selection Process

The following steps A through H outline the various selection process phases to be implemented prior to the effective date for each five-year selection process. The timeframes indicated represent time estimates (in calendar days or months) for each major phase (or multiple overlapping phases). Based on the aggregate of timeframes indicated, the selection process will be initiated no later than 24 months prior to each five-year selection process effective date.

A. Validate Critical Load

PJM will send critical load data to Generation Owners and Transmission Owners ("TOs") for validation. Critical Load requirements will be in accordance with PJM Manual M36, Attachment

A. PJM to work with Generation Owners and TOs to reconcile differences and update accordingly.

Targeted time: 30 days

B. Develop Technical Requirements for Request for Proposal ("RFP")

PJM will coordinate technical requirements for RFP with TOs, including MW requirements, MVAR capability, fuel assurance needs, and geographic details.

Targeted time: 30 days

C. Issue RFP for resources interested in supplying new Black Start

PJM will post the Black Start RFP on the PJM website with notifications to the appropriate stakeholder groups. Interested and required bidders should review the guidelines posted on the PJM Black Start Services RFP page titled "General Guidance: Black Start RFP Response Content" for guidelines on content of proposals.

The RFP notification will also advise that all bids submitted for Black Start resources must be cost-based bids consistent with Schedule 6A of the PJM OATT. Details of the required cost components for each prospective black start replacement bid are provided in PJM Manual M27.

Prospective RFP proposals:

Resources currently participating in PJM's Black Start Service do not need to respond to the RTO-Wide RFP and are expected to continue to provide Black Start Service at the current rate (Formula Rate or Cost Recovery Rate).

Existing Black Start Units would be eligible to respond to the RFP to become Fuel Assured Black Start Units. Existing Black Start Units that wish to be designated as Fuel Assured Black Start Units must offer as such into the RFP.

New Black Start resources in Generation Interconnection Queue would be eligible to respond to the RFP to become Fuel Assured Black Start Units or Black Start Units. New resources that wish to be designated as Fuel Assured Black Start Units must offer as such into the RFP.

Existing units that would require upgrades to provide Black Start Service or Fuel Assured Black Start Service would be eligible to respond to the RFP to become Fuel Assured Black Start Units or Black Start Units. Existing resources that wish to be designated as Fuel Assured Black Start Units must offer as such into the RFP.

Submission Window for RFP bids to be submitted: 90 days

D. RFP Proposal Evaluation

PJM will work with the TOs to evaluate proposals and select viable Black Start solutions based on the basis of critical load requirements, identified pursuant to M36, fuel assurance requirements, identified pursuant to M36, location, cost and operational considerations (amount, start time, etc.).

Units on a capital cost recovery rate would automatically be selected for the length of the recovery period plus the remaining life of the Black Start equipment. Units on bilateral contracts with TOs would be automatically selected for use in those zones. All Black Start Units on the Base Formula Rate that meet the criteria to be Fuel Assured Black Start Units and all Black Start Units on the Capital Recovery Rate that do not require any additional capital to be expended to meet the criteria to be Fuel Assured Black Start Units will selected as Fuel Assured Black Start Units if they are offered in as such during the RFP. Only one fuel assurance conversion will be selected per zone if no other options are available to meet the minimum zonal fuel assurance requirement.

PJM will work in collaboration with TOs to select Black Start solutions for each zone in accordance with the criteria outlined in Attachment A of PJM Manual 36, Section 4.6 of PJM Manual 12 and Schedule 6A of the OATT (Black Start Units do not need to be located in the same physical zone as the TO zone in which they will support).

PJM utilizes the following evaluation criteria in the RFP selection process. Preferred Black Start solutions typically include units located in close proximity (from a transmission topology perspective) to PJM-defined critical loads, which are loads to support quicker starting CT's and Combined Cycle units, nuclear safe shutdown loads, and electric-powered gas compressor stations. In addition, RFP proposals for natural gas Black Start Units with dual fuel capability and/or primary firm gas transportation contracts will be given a higher level of consideration in the RFP evaluation process. In the event that proposals received by PJM do not satisfactorily meet the fuel assurance criteria outlined below, PJM will request that the resource owners

resubmit proposals with adequate demonstration of dual fuel capability and/or primary firm gas transportation contracts (for gas units).

1. Technical Feasibility
    a. Reliability Analysis / EOP-005 Studies
        i. Feasibility of power flow study results, including operating within thermal and voltage limits, Black Start Unit has adequate reactive capability to handle line charging of cranking path and critical load requirements.
        ii. Feasibility of dynamic simulation study results, including operating within voltage, frequency and stability limits.
    b. Unit Location / Characteristics
        i. Geographically and electrically diverse from other Black Start Units in the TO zone.
        ii. Within TO zone or cross zonal black start.
        iii. Interconnection voltage level.
        iv. Type of generator (e.g. Simple Cycle CT, Hydro, etc.)
        v. Unit can serve multiple transmission outlets or support redundant cranking paths.
        vi. Unit can provide Black Start to more than one TO zone
        vii. Age of Unit
    c. Operational / Environmental Restrictions
        i. Limitations such as slow ramp to minimum load after synchronizing, minimum load requirements for stabilizing load, turn down ratio, other operational limitations.
        ii. Environmental permit change needed to operate at emergency minimum output during restoration, other environmental limitations.
        iii. Unit is able to meet minimum run hour requirements per OATT Schedule 6A (16 hours or as indicated in TO Restoration Plan).
        iv. Unit’s historical availability (GADs).
    d. Black Start Testing Requirements
        i. Is unit able to meet PJM Black Start testing requirements, (e.g. ability to close to a dead bus in 180 min., ability to operate at reduced loads during testing while islanded)?
        ii. Or, are testing exemptions required (e.g. special switching, stabilizing loads, breaker closing to a live bus, load banks).

2. Fuel Assurance
    a. Fuel Type / Fuel diversity
    b. Dual fuel capability / availability, including logistics assessment such as:
        i. Can unit start on both primary or secondary fuel alone?
        ii. Is start-up fuel required before running on primary or alternate fuel?
        iii. Special switching requirements to move from primary to alternate fuel (or vice versa)
    c. Onsite fuel storage
    d. Primary firm gas transportation contract vs. secondary firm or interruptible gas contracts; single vs. multiple gas pipeline access.
    e. Zonal minimum Black Start Fuel Assurance criteria, pursuant to PJM Manual 36
    f. Incremental Restoration Time Increase of 10 hours or more as identified in a PJM zonal reliability analysis
3. Cost / Schedule
    a. Annual Revenue Requirements (Capital Costs, Net Present Value comparison)
        i. Capital Costs / Black Start MWs
        ii. Net Present Value / Black Start MWs
    b. Black Start commitment period
    c. Cost recovery method – Base Formula Rate, NERC CIP Rate, Capital Recovery Factor Rate, FERC Rate.
    d. Proposed Black Start Service date to requested in service date

E. Verify Feasibility of Black Start Units Selected

PJM, with TO input, will identify Black Start cranking paths and Black Start Units to source Critical Loads.

PJM, with TO input, will perform dynamic simulations and reactive/voltage studies on cranking paths, and if issues are identified on cranking paths which would prevent a potential Black Start unit from performing in accordance with PJM Manual M36, other Black Start Units will be considered.

F. Review of Cost Recovery components

PJM will perform cost evaluation for each option and review cost recovery components provided for proposed Black Start solutions in accordance with PJM OATT, Schedule 6A.

Length of commitment is a minimum of 2 years for units entering on the base formula rate and length of the recovery period plus the remaining life of the Black Start equipment for units entering on the capital recovery rate. Compensation for units not electing to recover Black Start

capital costs is based on the PJM OATT Schedule 6A formula rate. Compensation for units electing to recover Black Start capital costs would be based on the PJM OATT Schedule 6A Capital Recovery rate based on the age of the unit. Black Start unit owners may also choose to file for recovery of actual costs directly with FERC.

The PJM Independent Market Monitor will verify cost data during selection process and verify annual revenue requirement (actual cost).

G. Review Selection Process Results with TOs

If reliability criteria and fuel assurance criteria are met, PJM will discuss any localized reliability issues, or any other special considerations with TOs, and address accordingly.

If reliability criteria or fuel assurance criteria are not met, proceed to Black Start Incremental RFP Process, detailed in Section 10.2

If reliability criteria and fuel assurance criteria are met, but there is disagreement on units selected, PJM will work with TOs to resolve differences. If differences cannot be resolved, the Dispute Resolution Process may be initiated under the PJM Operating Agreement and PJM Manual M33.

TO may elect to procure additional Black Start outside of PJM OATT and Selection Process.

PJM will inform State Commissions about the results of selection process (general results, not unit specific)

Targeted time for Steps D through G: 6 months

H. Implementation of Black Start Solutions

PJM will notify new Black Start Units that were selected through the process described in this Manual. Notification will include authorizing construction work to proceed as required for any new black start resources selected.

TOs will incorporate the use of Black Start generation and cranking paths into their restoration plans and submit revised restoration plans to PJM.

PJM and TO will add cranking paths to internal PJM tools.

PJM will provide current Black Start Units that are no longer needed to provide Black Start Service with a one-year termination notice.

Targeted time for Step H: 13 months

10.2 Black Start Incremental RFP Process

The Incremental RFP process shall be triggered by one or more of the following events ("triggering events"):

1. Notification of termination by the Black Start Unit or Fuel Assured Black Start Unit owner (whether termination is due to deactivation of the Black Start Unit or that the Black Start Unit owner no longer seeks to provide Black Start Service) in accordance with Schedule 6A of the PJM OATT;
2. Identification by Transmission Owner (TO) or PJM of new or changed Black Start needs as a result of a review of its restoration plan;
3. Procurement of Black Start resources in the event that the Black Start Selection Process described in Section 10.1 of this Manual fails to procure adequate Black Start resources to meet reliability or fuel assurance criteria for procuring Black Start as provided for in PJM Manual M36.

Upon the occurrence of any of the triggering events listed above, PJM will begin discussions with the TO to identify whether black start resources are needed in light of the existence of one of the triggering events.

1. If PJM and the TO determine that there is sufficient redundancy of Black Start resources and level of fuel assurance in the region, consistent with the minimum critical Black Start requirement defined in Attachment A of PJM Manual M-36 on System Restoration, such that there is no need to replace the terminating Black Start Unit in the restoration plan, PJM will initiate a final review and approval through the SOS-T committee of the TO's restoration plan and advise the TO whether such plan is adequate without a replacement Black Start Unit. In the event that PJM and the TO do not agree on whether there is a need to replace the terminating Black Start Unit in the restoration plan, PJM will initiate a review with SOS-T for additional technical assessment, and if after the SOS evaluation, an agreement is not yet achieved, the PJM Dispute Resolution process will be employed. Please refer to Section 4 of the PJM Manual for Administrative Services for the PJM Interconnection Operating Agreement (M33) for more details about the PJM Dispute Resolution process.
2. If PJM and the TO determine that there is a need to procure Black Start resources due to a Black Start termination/deactivation or a change in Black Start need, PJM shall proceed with the process defined in Section 10.2.1 to replace the withdrawing or deactivating Black Start resource.
3. If PJM and the TO determine that there is a need to procure Black Start resources due to failure of an RTO Wide Black Start RFP, PJM shall proceed with the process defined in Section 10.2.2 to address the Black Start resource need.

Timeline: Within 30 calendar days of receiving the termination request.

10.2.1 First Incremental RFP Process

1. After PJM and the TO determine that there is a need to procure Black Start resources based on one or more of the triggering events, PJM will post online a notification about the need for a new Black Start resource along with the location and capability requirements. Please refer to Attachment A of the PJM Manual for System Restoration (M36) for more details on the selection criteria for Black Start resources. This notification will also advise that all bids submitted for the Black Start resource must be cost-based bids consistent with Schedule 6A of the PJM OATT. Details of the required cost components are provided in PJM Manual for Open Access Transmission Tariff Accounting (M27) and Schedule 6A of the PJM OATT.
2. This posting should be made within 30 calendar days of a triggering event, and will mark the beginning of the First Incremental RFP which will last 90 calendar days from the date of the notification. The posting will also advise that PJM will be reviewing pending generator interconnection projects and other projects that are received within the Market Window.
3. PJM will review each Generation Interconnection Request pending under Part IV of the PJM Tariff at the time a Market Window is opened (as described above) and each response by Black Start Units, each Interconnection Request it receives during the First Incremental RFP Market Window, to evaluate whether the project proposed in the request could meet the Black Start criteria for which the First Incremental RFP was issued.
4. The TO will also have the option of negotiating a cost based bi-lateral contract with a Generation Owner for Black Start Services. The TO may provide the alternative as one of the bids for the Black Start replacement that will be evaluated by PJM pending FERC approval of the bilateral contract.
5. If PJM and the TO determines that more than one of the proposed projects within the First Incremental RFP meets the Black Start criteria, the most cost-effective resource for the Black Start replacement will be chosen, provided the identified resource accepts and maintains designation as a Black Start Unit under Schedule 6A of the PJM OATT. Submitted projects costs must be consistent with Schedule 6A of the PJM OATT.
6. Any Black Start resources identified as a result of the First Incremental RFP will be notified by PJM, and PJM and the TO will coordinate with the Black Start Unit owner for its acceptance under the PJM tariff as a Black Start Unit.

10.2.2 Second Incremental RFP Process

If the First Incremental RFP, or RTO Wide RFP, fails to procure adequate Black Start resources to meet the reliability criteria, PJM will initiate a Second Incremental RFP process to obtain Black Start resources. The Second Incremental RFP will follow the process described in Section 10.2.1, but PJM and the TO may modify the location and capability requirements for the Black Start resource, if necessary, to allow more resources to become viable as replacements. At this point, the TO will be notified of failed First Incremental RFP, or RTO Wide RFP, to allow them to

begin preparation of a Black Start solution should the Reliability Backstop in Section 10.3 be necessary.

Any Black Start resources identified as a result of the Second Incremental RFP will be notified by PJM, and PJM and the TO will coordinate with the Black Start Unit owner for its acceptance under the PJM OATT as a Black Start Unit.

If no projects are identified under the Second Incremental RFP, PJM and the TO will investigate implementation of the Reliability Backstop as described in Section 10.3.

10.2.3 Implications for Terminating Black Start Units

This section applies to Black Start Units procured during the First or Second Incremental RFP for the purpose of replacing a Fuel Assured Black Start Unit(s) or a Black Start Unit(s) that is terminating. If it is determined that a Black Start resource procured under either the First or Second Incremental RFP will not be available prior to the proposed termination date of the Black Start Unit PJM will use the following process.

1. PJM will identify whether there is a need to request that the generator continue to provide Black Start Service beyond the planned termination date, pending procurement of Black Start resources during the Incremental RFP process. Within 30 days of the Black Start Unit owner's notification of the proposed deactivation or withdrawal of the Black Start Unit from providing Black Start Service, PJM will notify the GO whether there is a need for the Black Start Unit proposed for deactivation or withdrawal to continue operating beyond its proposed deactivation date or withdrawal date.
2. In the event that such notice requests that a Black Start Unit proposed for withdrawal from providing Black Start Service (but which is not deactivating) continue operating, the notice shall request that such unit voluntarily fulfill its commitment period to provide Black Start Service.
3. In the event that the notice requests that a Black Start Unit proposed for deactivation continue operating, the notice shall provide an estimate of the time period that the Black Start Unit is needed to operate beyond its proposed deactivation date.
4. Within 30 calendar days of such notice by PJM, the Black Start Unit owner shall notify PJM whether the Black Start Unit will continue operating beyond its proposed deactivation date or withdrawal date.
5. A Black Start Unit proposed for deactivation that operates beyond its deactivation date shall be compensated pursuant to the deactivation procedures set in Section 9 of this Manual, and in Part V of the PJM OATT.
6. A Black Start Unit proposing to withdraw from providing Black Start Service (but which is not deactivating) that continues providing Black Start Service for its commitment period shall receive Black Start Service revenues pursuant to Schedule 6A of the PJM OATT but will not be eligible for compensation pursuant to Part V of the PJM OATT.

7. In the event that, through the First or Second Incremental RFP process described above, a replacement Black Start resource is identified, and so long as any other mitigation measures identified by PJM under Part V of the PJM OATT are in place, PJM, as soon as practicable, shall notify the Black Start Unit owner of such replacement, that its Black Start Unit no longer will be needed for reliability, and the date the Black Start Unit may withdraw from providing Black Start Service or deactivate without affecting reliability.

10.3 Black Start Reliability Backstop Process

10.3.1 Reliability Backstop Process Step 1

PJM and TO discuss the Black Start shortage and the possibility of triggering the Reliability Backstop RFP.

The triggers for the Reliability Backstop process are:

1. A Black Start generation shortage or a failure to meet the Black Start Fuel Assurance criteria in a TO zone; AND
2. Two failed RFPs (no technically viable solutions to address the Black Start shortage or a failure to meet the fuel assurance criteria are identified or cost recovery terms that do not conform to the PJM OATT):
   a. Two failed Incremental RFPs, OR
   b. Failed RTO Wide RFP and one failed Incremental RFP; AND
3. No cross-zonal solutions available; AND
4. No RTEP transmission solutions available (e.g., operational performance baseline upgrade).

Targeted Timeline: Within 5 days of determination of failed Second Incremental RFP

10.3.2 Reliability Backstop Process Step 2

PJM, TO and affected State(s) will discuss the Black Start shortage situation or failure to meet the Black Start Fuel Assurance criteria including the benefits and costs of the TO proposal and the implications of the shortage of Black Start to the restoration plan. Considering these discussions, PJM will determine whether to issue Reliability Backstop RFP. If Reliability Backstop RFP is not issued, PJM will actively monitor the Black Start shortage.

In the event that PJM and the TO do not agree on the decision concerning the Reliability Backstop RFP, PJM will initiate a review with the SOS-T for additional technical assessment and if after the SOS-T evaluation, an agreement is not yet achieved, the PJM Dispute Resolution process will be employed. Please refer to Section 4 of the PJM Manual for Administrative Services for the PJM Interconnection Operating Agreement (M33) for more details about the PJM Dispute Resolution process.

Targeted Timeline: Within 10 days of determination of failed 2nd RFP

10.3.3 Reliability Backstop Process Step 3

Once PJM determines that the Reliability Backstop Process is required, it will issue the Reliability Backstop RFP. As part of this online notification, the TO solution will be made public (except for information that is Critical Energy Infrastructure Information). The TO solution may be owned by the TO, by a generation owning affiliate or contracting for by the TO with a generation owning third party.

The TO has the obligation to submit a solution proposal within the Reliability Backstop RFP. The RFP will indicate that any proposed Fuel Assured Black Start Unit or Black Start Unit, whether it is a TO proposed unit, or a GO proposed unit, will be used for Black Start purposes only. The unit will NOT participate in the capacity market, energy market or other ancillary service markets except Black Start. The unit will run for Black Start and Black Start testing purposes only.

The Reliability Backstop RFP will be conducted on an accelerated schedule of 30 days.

Targeted Timeline: Within 15 days of determination of failed 2nd RFP

10.3.4 Reliability Backstop Process Step 4

PJM will evaluate any responses from the Reliability Backstop RFP in comparison with the TO solution. If the TO solution is the only option received (or the best option received), it will be implemented.

It will be the responsibility of the TO to submit a filing with FERC under the Federal Power Act, as necessary, to recover costs (capital costs, ongoing O&M costs, depreciation and/or fuel) as Transmission Assets. Such cost recovery would be in Attachment H for TO owned generation, or such other revenue requirement filed with and accepted by FERC, or as contracted for outside of the PJM OATT, Schedule 6A. For GO owned BS, recover through Schedule 6A of the PJM OATT or FERC filing.

Any Black Start generation acquired in the Reliability Backstop RFP (regardless of ownership or cost recovery method) must adhere to all Black Start testing and performance requirements as described in PJM OATT, Schedule 6A and the PJM Manuals. Any Fuel Assured Black Start generation acquired in the Reliability Backstop RFP (regardless of ownership or cost recovery method) must adhere to all Fuel Assurance Black Start testing and performance requirements as described in PJM OATT, Schedule 6A and the PJM Manuals.

10.3.5 Reliability Backstop Process Flow Chart

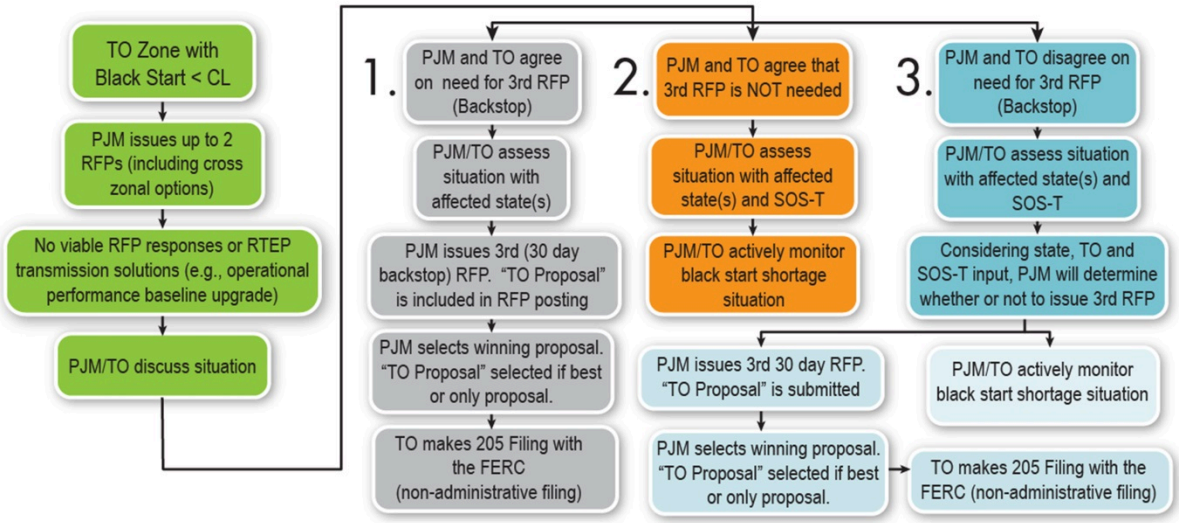

Section 11: Generator Data Confidentiality Procedures

Welcome to the Generator Data Confidentiality Procedures section of the PJM Manual for Generator Operational Requirements. In this section you will find the following information:

- Description of the PJM generator data confidentiality procedures for a Transmission Owner (TO) to obtain confidential generator data from PJM.

11.1 Generator Data Confidentiality Procedures

In order for PJM to perform reliability analyses and system restoration planning, generators are required to provide real time, scheduled outage, and unit parameter data to PJM. While PJM has the overall reliability responsibility for the PJM RTO, local Transmission Owners have a similar responsibility to monitor and assess the reliability of their transmission systems and distribution systems, and to develop and maintain system restoration plans. In order for the Transmission Owners to perform their local reliability functions, Transmission Owners need certain data about the generators to formulate a realistic basis for the analysis and plans. The Terms & Conditions covering the confidentiality of the data are contained in the PJM Operating Agreement, Section 18.17.7 (Disclosure of Generator Data to Transmission Owners).

The following Generator Data Confidentiality Procedures pertain only to real time data (real time MW, MVAR, unit status, and reactive capability data), scheduled outage data (start date/time, return date/time, and derate for planned and maintenance outages), and unit parameters (including, but not limited to, unit start-up times, ramp rate, start-up auxiliary load profile and emergency low load operation capabilities, and cold weather operating limits).

Transmission Owners require both real time and generator data to perform their reliability and planning functions. These transmission owner functions include, but are not limited to:

1. Real time EMS applications: state estimator and contigency ~~security~~ analysis
2. Transmission Owner's real time role
3. Transmission outage scheduling process
4. Reliability study and training
5. System restoration planning

The Transmission Owner that demonstrates a need for specific data may request that PJM provide real time data (MW, MVAR, unit status, and reactive capability data), future scheduled outage data, and certain parameter data for units identified in a Transmission Owner restoration plan. The Generation Owner may request that PJM provide a list of TOs receiving real time data, future scheduled outage data, and/or certain parameter data from their generator(s).

11.1.1 Generator Data within a Transmission Owner's Zone

For generators within a Transmission Owner's zone for which PJM presently receives data, PJM will make this data available to the TO. For a new unit, this data is made available to the Transmission Owner as soon as it is added to the PJM systems.

11.1.2 Generator Data outside a Transmission Owner's Zone

For generators outside a Transmission Owner's zone for which PJM presently receives data, PJM will make this data available to the TO following a review of the reason for the request.

The Transmission Owner initiates the process by sending an email to the PJM Generation Department via the email address RTGenData@pjm.com along with Attachment J "Generator – Data Release Matrix" detailing which generator(s) are included in the request. The TO request must also explain why data is being requested for generators outside the TO's zone. Upon approval of the request, PJM will provide the generator data to the TO and will inform the Generation Owner that the data has been provided when the request has been completed. PJM will use the eDART contact as identified in the eDART survey, as the contact for this communication.

The most common reasons for a TO request data outside its zone are:

- The Transmission Owner's existing EMS model already includes the generator(s).
- The Transmission Owner is expanding their EMS model and would like to add the new generator(s).
- The generator is identified in a Transmission Owner restoration plan.

11.1.3 Dispute Resolution

The process for appeal is to follow the PJM Dispute Resolution Process. Further information about this process may be found in Section 74 of PJM Manual M-33, Administrative Services for the PJM Interconnection Operating Agreement.

11.1.4 Generator Data Sharing Process Flow

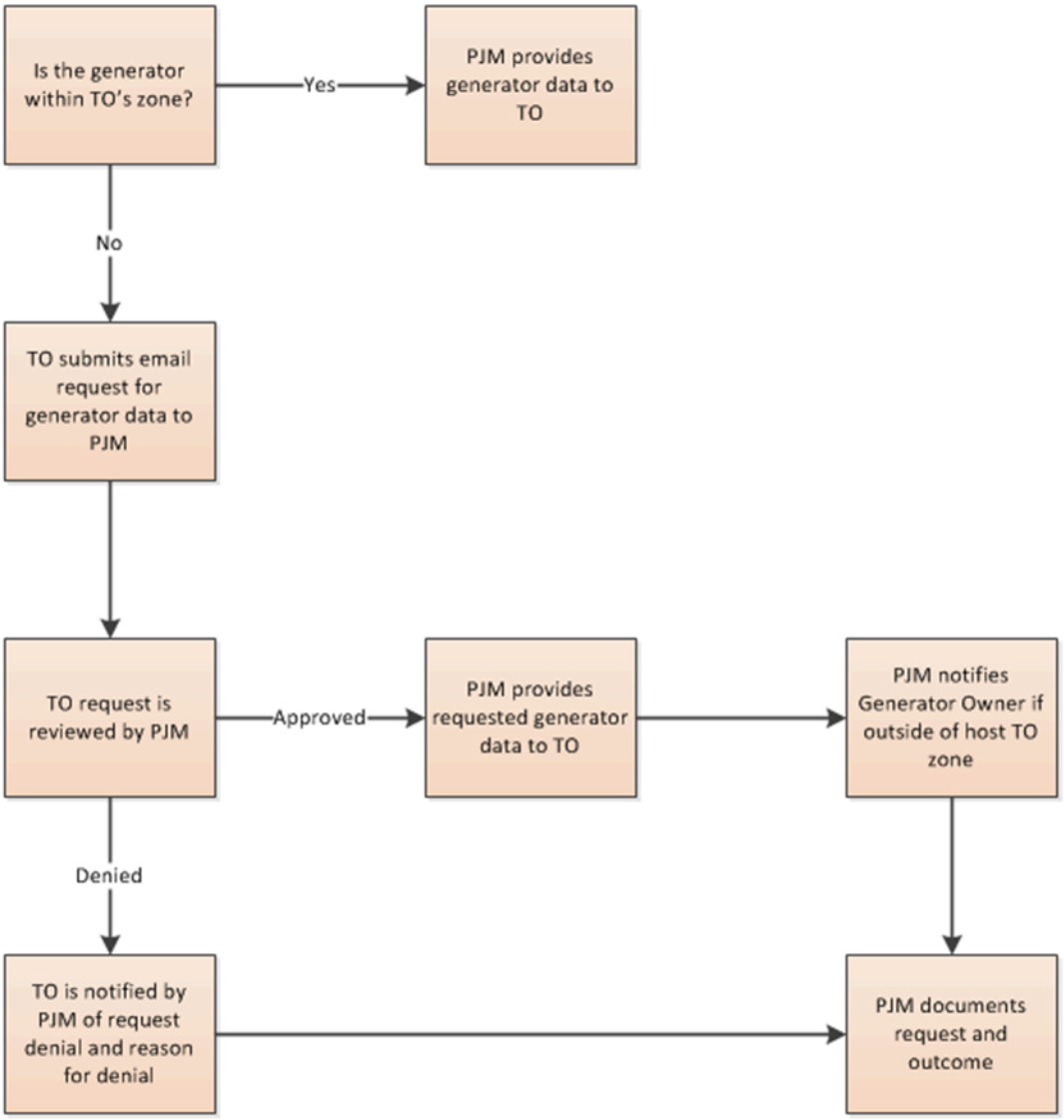

Exhibit 12: Generator Data Sharing Process Flow

Section 12: Solar Park Requirements

Welcome to the Solar Park Requirements section of the *PJM Manual for Generator Operational Requirements M-14D*. In this section you will find the following information:

- Description of solar park data requirements.
- Description of PJM solar power forecasting service.
- Refer to Attachment L, Jointly Owned Resource Communication Model and Attachment M, Wind and Solar Unit Dispatchability Check List for additional solar park requirements.

12.1 EMS Data Exchange

The PJM SCADA system allows PJM to communicate directly with individual generators or Generation Control Centers. A data concentrator (e.g. Remote Terminal Unit, Generation Management System, etc.) is located at the Member's site, and, after collecting data from the industrial metering equipment, communicates with PJM's SCADA system using either DNP (Distributed Network Protocol) or ICCP (Inter-Control Center Protocol) consistent with PJM Control Center and Data Exchange Requirements Manual (M01).

Every generator interconnected with and synchronized to the transmission system must at all times coordinate operation with PJM and the Transmission Owner, providing all necessary and requested information and equipment status, to assure that the electrical system can be operated in a safe and reliable manner. Attachment L, Jointly Owned Resource Communication Model defines coordination models that are considered acceptable.

This coordination includes, but is not limited to:

- Supplying low-side generator gross-MW and MVAR output.
- Supplying meteorological data (measured solar irradiance, back panel temperature, ambient air temperature, wind speed, and wind direction – see table in Section 12.2.3 for listing of requirements.)
- Scheduling the operation and outages of facilities including providing advanced notification.
- Coordinating the synchronization and disconnection of the solar park with PJM and Transmission Owner.
- Coordinating the dispatching of a generation unit utilizing the solar "curtailment indicator."
- Providing data required to operate the system and to conduct system studies.
- Providing documented start-up and shutdown procedures including ramp-up and ramp-down times.
- Following PJM-directed plant operation during emergency and restoration conditions.

- Following PJM-directed operation during transmission-constrained conditions.

All data items, regardless of type, are collected and disseminated at a frequency of 10 seconds or less.

Each PJM Member is responsible for determining data-quality indicators for all data transmitted to PJM. Both failed individual values and any value calculated using a failed point must be flagged. When a point fails for an extended period, a manual update of the point's value may be necessary to keep the data as accurate as possible. The Generator shall communicate the outage of any data communication equipment connecting the facility to PJM Dispatch.

12.2 Solar Park Data Requirements for Solar Power Forecasting

PJM's solar power forecaster requires data points from the solar parks to accurately forecast the solar power. The following are the data requirements for Solar Parks:

12.2.1 Data Requirements for Solar Forecast Set Up

The solar parks are required to provide the following data points for all panels as part of their initial set up, and whenever any changes to the set up (e.g. panel upgrades) occur, so they can be properly modeled within the solar power forecasting tool. Solar parks with more than one component (i.e. sites that include multiple panel models) will need to provide data for each component.

- Maximum Facility Output (MW)
- AC installed capacity of each plant component(MW)
- DC installed capacity of each plant component (MW)
- For fixed panel sites:
  - Azimuth angle of panels (decimal degrees from true north)
  - Altitude angle of panels (decimal degrees from horizontal plane)
- For tracking sites:
  - Tracker type (single or dual axis)
  - Tracker make and model
- Geographic location of center point of solar park site (decimal degrees longitude and latitude)
- Geographic location of meteorological data sensors (decimal degrees longitude and latitude)
- Manufacturer and model of the PV panels
- Information regarding operating capabilities during extreme cold weather operations, including ambient temperature operating limits and descriptions of processes for monitoring and removing ice and snow, conditions that could cause tracking functionality to cease normal maneuvers, etc.

Note:
Aggregate Reactive Capability Curve (D-Curve) is required to ensure accuracy of PJM's EMS Contingency ~~Security~~ Analysis Results.

12.2.2 Real Time Output

All solar parks that are dispatchable in accordance with Attachment M: Wind and Solar Unit Dispatchability, or have Maximum Facility Outputs greater than or equal to 3 MW, regardless of voltage level of connected bus, are required to provide the real-time solar park MW/MVAR output along with other data points. (Solar parks with AC capacities lower than 3 MW might also be required to provide MW/MVAR data if they meet any of the criteria listed in Section 4.2.2.) This output should be telemetered at low-side gross. High-side net may also be required as dictated by PJM's model. If a solar park is part of a hybrid resource or is collocated with any other type of generating resource, then separate metering is required for each component to allow for accurate solar forecasting.

12.2.3 Real Time Meteorological Station (or mutually agreed upon alternative source)

The solar power forecasting accuracy is highly dependent on the availability of the real time meteorological station data for tuning the forecaster model. Each solar park must install at least one meteorological station in the park and provide real time meteorological data to PJM through ICCP or DNP link. Depending upon the topology and the accuracy of the solar power forecast, PJM may request addition of more meteorological stations at a Solar Park site.

The generation owner should calibrate and check the accuracy of the meteorological station every year as per standard.

The meteorological data shall include the following parameters:

Parameter	Units	Requirement or Accepted
Plane of Array (POA) Irradiance	Watts/meter^2	Required for plants with Maximum Facility Output of 3 MW or higher
Back Panel Temperature	Degrees Fahrenheit	Required for plants with Maximum Facility Output of 3 MW or higher
Ambient Air Temperature	Degrees Fahrenheit	Accepted
Wind Speed	meters/second	Accepted
Wind Direction	decimal degrees from true north	Accepted

12.2.4 Generator Outage Reporting

PJM is responsible for coordinating and approving requests for outages of generation and transmission facilities, as necessary, for the reliable operation of the PJM RTO. PJM maintains records of outages and outage requests for these facilities.

The electronic Dispatcher Application and Reporting Tool (eDART) provides communication with PJM for Generation Owners regarding unit outage requests, updates to reactive capability curves (D-curves), and AVR statuses. Additional applications may be integrated in eDART in the future. User registration is available from the PJM Web site.

Solar park outage/derate information is required to validate and enhance the accuracy of the solar power forecast.

See the PJM Manual for Pre-Scheduling Operations (Manual 10) Section 2 Outage Reporting for the generation outage reporting requirements.

Note:
Due to the impact of planned/unplanned solar resource outages on solar power forecast accuracy, solar and solar inclusive hybrid resources shall report any outage of one megawatt or more with duration of one hour or longer.

12.2.5 Solar Power Forecast

PJM will collect each solar park's real-time aggregate power output and meteorological data from the solar park. The data will then be sent to the solar power forecaster along with Solar Park curtailment/outage information. All data shared with the solar power forecast vendor is treated as confidential. The solar power forecaster will collect all of the data from PJM and other outside sources, such as global and regional weather forecasts, and after processing the data will provide PJM with the solar power forecast and all associated data for the individual or aggregate solar parks as designated by PJM.

PJM does two different types of forecasts for each individual or aggregate solar park. All the examples consider the current time to be T.

1. Five Minute Forecast (T + 6 hours): Update solar power forecast and irradiance forecast with a frequency of every ten minutes and forecast interval of five minutes for the next six hours (6) for the individual or aggregate solar parks as designated by PJM.
2. Hourly Forecast ((T + 168 hours: Update solar power forecast and irradiance forecast with a frequency and interval of every hour for the next one hundred sixty eight hours (168) for the individual or aggregate solar parks as designated by PJM.

12.3 Forecast Data Usage

12.3.1 Real-time Reliability Assessment

PJM will use the Five Minute solar power forecast to evaluate current day congestion and to ensure that sufficient generation resources are available to respond to real-time or projected fluctuations in solar power output.

12.3.2 Day-ahead Reliability Assessment

PJM will use the Hourly solar power forecast to predict day-ahead congestion and mitigating strategies and to ensure that sufficient generation resources are scheduled within PJM to meet forecast load, transaction schedules and PJM reserve requirements. PJM may choose to use the updated version of the day-ahead solar power forecast provided by the forecaster after 1700 hours and before 1800 hours.

The Hourly solar power forecast may also be used to analyze weekend or long holiday conditions.

12.3.3 Real-Time Operating Reserve Settlement

PJM will use the solar power backcast in the calculation of the Lost Opportunity Cost for solar resources and applicable hybrid resources in real-time. Real-time meteorological data values sent to PJM (described 12.2.3) cannot be static or flat-lined and must be within reasonable limits. Further detail on the calculation can be found in Manual 28.

Section 13: Mixed Technology Facility Requirements

This section provides additional requirements specific to Mixed Technology Facilities. Mixed Technology Facilities are Generating Facilities and must follow all other requirements for Generating Facilities outlined in this manual and elsewhere.

13.1 Marketing and Classification of Mixed Technology Facilities

Mixed Technology Facilities (i.e., facilities combining multiple distinct generation technologies that share a single Point of Interconnection) with components that are capable of operating independently, without significant interactions, may participate in markets as two or more Co-Located Resources. The Co-Located Resources at a single Mixed Technology Facility participate as separate resources of the applicable technology type, with separate energy market offers and settlements. A Co-Located Resource must meet all the provisions for the corresponding resource type.

Mixed Technology Facilities with multiple inverter-based components or with a storage component may instead participate in markets as a single Hybrid Resource, with a single energy market offer and a single settlement point. An Hybrid Resource is a unique resource type, and (unless otherwise stated) is not automatically subject to the provisions that apply to its component types. For example, a wind+battery Hybrid Resource is not subject to all the market provisions that apply to a standalone wind resource (though, as specifically outlined below, it does need to meet the provisions for wind farms specified in Section 8.1 and 8.2 of this manual).

A Hybrid Resource is called “open-loop” if it chooses to operate by charging from the grid, or “closed-loop” if it does not.

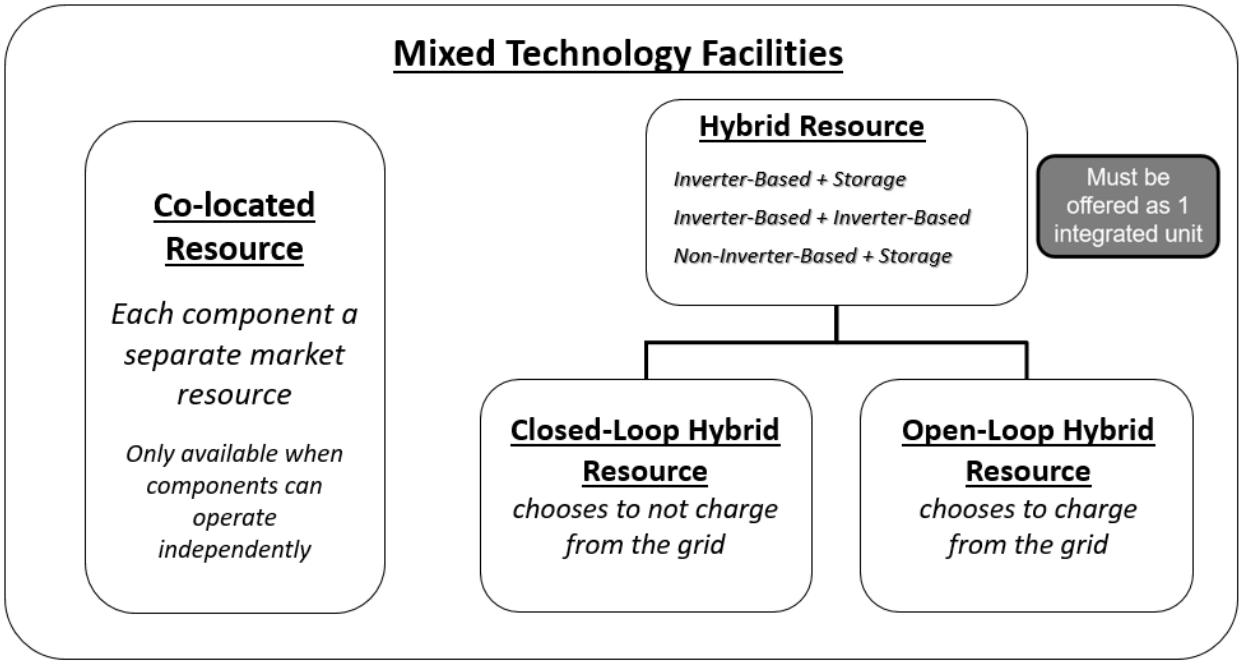

A Mixed Technology Facility must participate in markets as a Hybrid Resource if the Mixed Technology Facility includes a storage component that is physically incapable of charging from the grid

A Hybrid Resource that does not consist of any storage components is inherently "closed-loop" because it cannot physically charge from the grid.

A Hybrid Resource that participates in the capacity market is accredited for its capacity value as a single Combination Resource in the applicable ELCC Class that matches the characteristics of the Hybrid Resource (e.g., tracking solar plus 4-hour storage, open loop). The number and type of resources modeled at a Mixed Technology Facility must match between the Capacity Market and the Energy Markets for the applicable delivery year. That is, if the Mixed Technology Facility is represented in the Capacity Market as two standalone-equivalent resources in the 2028/29 delivery year, then it must also be represented in the energy markets as two standalone-equivalent resources of the same technology type for that same delivery year.

Mixed Technology Facilities that are eligible to participate in markets either as a Hybrid Resource or as multiple Co-Located Resources may change their designation as follows:

1. A Mixed Technology Facility participating in the capacity market may change its modeling according to the provisions of Manual 21B, Section 2.6.

2. A Mixed Technology Facility that is Energy Only may change its modeling once per calendar year with notice to PJM on or before May 30 before the calendar year for which the change is desired. The new modeling remains until another notice is received. For a Mixed Technology Facility within the new resource queue process, the modeling choice must be made no later than six (6) months in advance of its initial start in the energy markets.

13.2 Other Requirements

For account metering and real-time data requirements of Mixed Technology Resources, see Section 4.2.3 above.

A Hybrid Resource with a solar component must meet those requirements for solar parks specified in Section 12 of this manual. A Hybrid Resource with a wind component must meet those requirements for wind farms that are specified in Section 8.1 and 8.2 of this manual.

eDART Outages of the components of a Hybrid Resource are reported separately for each component.

Attachment A: New Generator Checklist

This checklist is a guideline to be used by new generation connecting to the PJM system as a Capacity Resource or Non-Capacity Resource. It is not all inclusive and not all functions noted are applicable to every generator. Contact PJM's Member Relations Client Manager for additional information.

Operations	Status Date	
	Needed	Complete
Dispatch		
Control		
Plant Operation		
Emergency Procedures		
PJM Communications		
Restoration		
Loading Reserves		
Regulation		

Data	Status Date	
	Needed	Complete
Telemetry[2]		
Markets Gateway[3]		
Outages		
Voltage Schedule		

[2] Real Time and integrated meter data

[3] Daily Schedule and bids, cost curves, start and no-load costs, etc.

Data	Status Date	
	Needed	Complete
Reactive Capability Curve		
Meter Error Correction		
Synchrophasor Communication System		

Market	Status Date	
	Needed	Complete
Energy Transactions		
- Within PJM		
- Outside of PJM		
Capacity Transactions		
FTRs		
Synchronized Reserve		
Regulation		
Black Start		

Administrative	Status Date	
	Needed	Complete
Membership Application [4]		
Interconnection Agreement		
Firm Transmission Service [5]		
Non-Firm Transmission Service[6]		
Billing Contact Information Form		
Committee Registration Forms		
Capacity Transaction Authorization[7]		
Capacity Exchange Registration[8]		
inSchedule Registration		
Markets Gateway Registration		
Power Meter Registration		
FTRCenter Registration		
OASIS Registration		
eGADS Registration		
Data Viewer Registration[9]		
eDART Registration[10]		

[4] Membership Application – http://pjm.com/about-pjm/member-services/member-forms.aspx

[5] Firm Transmission Service Application – http://pjm.com/about-pjm/member-services/member-forms.aspx

[6] Non-Firm Transmission Service Application – http://pjm.com/about-pjm/member-services/member-forms.aspx

[7] Capacity Transaction Authorization Form – http://pjm.com/~/media/documents/manuals/m18.ashx

[8] Capacity Exchange /inSchedules Registration – https://esuite.pjm.com/mui/

[9] Data Viewer Registration – https://esuite.pjm.com/mui/

[10] eDART Registration – https://esuite.pjm.com/mui/

Training	Status Date	
	Needed	Complete
PJM Overview		
Capacity Exchange		
inSchedules		
FTRCenter, Power Meter, Markets Gateway		
OASIS		
eGADS, eDART, MIRA, Generator Outage Reporting		
Unit Commitment		
LMP		
Operations		
Dispatcher		
Communications		
Emergency Procedures		
Market Settlements		

Systems/Communications	Short Term Date	
	Needed	Complete
Communications		
Telemetry		
ICCP EMS Links/PJM DNP Net/Jetstream		
Metering Links		
Synchrophasor Links		
PJM*net*		
Frame Relay		

Systems/Communications	Short Term Date	
	Needed	Complete
ISDN Backup		
Voice		
Generator ALL CALL		
POTS		
Systems/Applications		
EMS		
System Changes		
Modeling		
PJM Testing		
Integration Testing		
Unit Commitment (Markets Gateway)		
System Changes		
Permission to view existing data		
Testing		
Two-Settlement (Markets Gateway)		
System Changes		
Testing		

Exhibit 13: New Generation Checklist

Attachment B: New PJM *net* Customer Implementation Voice/Data Communications Template

New PJMnet Customer Implementation
Voice/Data Communications

Objective

The completion of this document will provide PJM with the information necessary to configure and install the required voice and data communications necessary for you, our new customer, to communicate with PJM. PJM will assume total responsibility for the coordination efforts required to acquire and implement the appropriate telecommunications circuits.

Customer Information	
PJM Member Name	
Customer Business Name	
Customer Business Address	
Customer Business Contact	
Telephone Number	
Fax Number	
Email Address	
Customer Technical Representative	
Customer Technical Representative Email	
Customer Technical Representative Fax Number	
Total Number of MW at site/For which site is responsible	
Site Access Hours	
Site Access Requirements	

Site Circuit Information	
Desired hardware install by date	

Desired circuit fully operational date	
Area code and exchange telephone number where circuit is to be terminated:	
Location Name	
Street	
City	
State	
Zip Code	
Site Point of Contact	
Telephone Number	
Email Address	
Fax Number	
Circuit Termination	
Floor/Room Number/Name	
Telephone Number (within 5 feet of router)	

Note:
For the purposes of remote router support POTS lines need to be installed for each router.

Number Assigned	
Number Assigned	

Site Circuit Termination Design	YES	NO
Diverse Telecommunications Entrance Facilities into Site	◻	◻
Telecommunication carrier demarcation location different from install location	◻	◻
Termination capacity currently exists	◻	◻

Demarcation Extension to be performed by	◻ None	◻ Telco	◻ Site Staff

Circuit Configuration (provided by PJM)

□ Physical Address DS1	□ Port Speed	□ CIR
Date Site Survey Completed		
□ PVC to PJM Jefferson Control Center	□ PVC to PJM Milford Control Center	
Circuit Notes:		

PJM Supplied Hardware Information				
□ Very Large (A)	□ Large (B)	□ Medium (C)	□ Small (D)	
Communication Protocol	□ ICCP	□ DNP	□ EMS	□ SCADA
PJMnet Router Type:				
Gateway devices required (DNP implementations only) □ Yes □ No				

Note:
Note for electrical facilities that have a major impact on PJM operations: PJM requires the computer hardware and software at each control center should achieve a long-term 99.95% availability level for those critical functions directly affecting the successful operation of PJM. Redundant hardware configurations with either automatic or rapid manual failover schemes are generally necessary to achieve 99.95% availability. In addition, reliable AC power source(s) and communications are also necessary. Members should keep this requirement in mind when designing these systems.

Customer Site Environment Information		
Site Power Configuration (diversity/redundancy)	YES	NO
Separate Equipment Breakers	□	□
Separate Electrical Panels for Equipment	□	□
Uninterruptible Power Supply	□	□
120v/60 Hz AC Power Available	□	□
If no AC power is available, please describe available power:		

Voice Modules
PJM*net* will provide a voice-over IP (VOIP) output from each router for future voice communication with PJM. PJM will be using a conventional dial plan for the PJM*net* VOIP circuits (will match the corresponding public switched network phone number).

What type of facility will you have connected to the router?				
◻ PBX	◻ Standard Phone	◻ Trader Turret System		
If a PBX Connection, please specify port type:		◻ FXS	◻ FXO	◻ E&M

Note:
An FXO connection to the router is preferred because any standard phone can be connected to the router in case of a PBX failure.

Hardware Notes:
Date Site Survey Completed:

Network Information		
Network Address		
Subnet Mask		
IP Address for PJM Router		
Will this network be protected by a firewall?	◻ Yes	◻ No
Will the firewall be providing Network Address Translation (NAT)?	◻ Yes	◻ No
Will the firewall be in service during router installation?	◻ Yes	◻ No
Please provide a contact for the firewall administrator:		
Name		
Phone		
Can IP 10.134. be used by PJM?	◻ Yes	◻ No
If yes, supply a 10.34.xx address that will be used as a loop back address. -10.34.		
Please list what devices (RTU, Meter< FEP, etc.), device type (DNP, ICCP) IP Address will be monitored:		

Device Name/Type	Communications Protocol	IP Address

Attachment C: New PJM Customer Voice/All Call Communications Request Form

Objective

This document will provide PJM with the information necessary to implement voice (two-way) and All Call (one-way) communications, which are essential for operation of the PJM grid.

Customer Information

PJM Member Name: _____

Customer Contact

Name: _____

Street: _____

City, State, Zip code: _____

Telephone: _____

Email Address: _____

Customer Type: (check the one that applies)

Generation Transmission Dispatch Center Demand Side Response

PJM Transmission Zone(s) of Operation _____

Site Information

Total Number of MW at Site for which site is responsible: _____

Desired date of operation: _____

Location where the phone call is received

Location name: _____

Street: _____

City, State, Zip code: _____

Two Way Voice Communication Information

Primary **dedicated** phone number for PJM Dispatch Operations to call: _____

Secondary **dedicated** phone number for PJM Dispatch Operations to call: _____

PJM All Call Information

(PJM requires a Primary phone number dedicated solely to PJM for operation and emergency communications. All Call may not terminate in voice mail, ACD or answering systems)

Primary number: _____

Secondary Number: _____ Cellular: YES NO

(May be shared lines or cellular numbers, indicate if cellular)

Tertiary Number: _____ Cellular: YES NO

(May be shared lines, indicate if cellular)

Approval

Please provide your PJM Contact's name: _____

Contact Engineering Technicians at engtechs@pjm.com for technical assistance or questions in completing this for

Attachment D: PJM Generating Unit Reactive Capability Curve Specification and Reporting Procedures

The purpose of this attachment is to provide further explanation of the PJM Generating Unit Reactive Capability Curve Specification and Reporting Procedures that are discussed in this manual Section 7: *Generator Operations*. This section applies to all Generating Facilities, including Energy Storage Resources and Mixed Technology Facilities. This section also applies to Synchronous Condensers. Any inquiries associated with the reactive curve information that do not have an immediate impact to real time operations can be sent to ReactiveTesting@pjm.com . The following requirements are applicable only for units physically located within the PJM RTO footprint or Reliability Coordinator area.

Specifications

Listed below are the specifications for the Continuous Generating Unit Reactive Capability Curve (D-curve) as required to be entered into PJM's eDART system.

1. In general, the following data for each point on the curve must be specified:
    a. The "Unit Net MW Output" provided to the system, as measured at the low-side of the unit step-up transformer, excluding any station service load fed off the unit terminal bus, consistent with the PJM EMS model.
    b. The "Unit Minimum Net MVAR Limit" at the specified "Unit Net MW Output", consistent with the PJM EMS Model."
    c. The "Unit Maximum Net MVAR Limit" at the specified "Unit Net MW Output", consistent with the PJM EMS model.
    d. A sufficient number of curve points must be provided to accurately model the full operating range and capability of the unit as described above. (Refer to the guidelines noted below in Exhibit 17 for additional details.)
    e. The "Unit Minimum and Maximum Net MVAR Limits" must indicate the realistic, usable capability that is sustainable during continuous long-term unit operation. This sustainable continuous capability is based on actual operating experience (or testing) and takes into consideration any normal unit or thermal plant restrictions at 95 degrees Fahrenheit ambient or above. Therefore, the reactive capability derived results is the proven sustainable reactive capability, rather than merely reflecting the design limits of the unit.

2. The "Maximum AVR capable Unit Net MW Output" provided to the system, as measured at the low-side of the unit step-up transformer, excluding any station service load fed off the unit terminal bus, consistent with the PJM EMS model. This is the maximum MW output at which MVAR capability range converges to zero, and beyond which more MW output may be possible but without any MVAR control range. The "Unit NetMaximum AVR capable MW Output" is a limit of the AVR subsystem of the genset or inverter, and may exceed the MW capability (Maximum Facility Output) of the generator (or solar panels, etc.) itself.
3. The "Unit Minimum MW Output with Reactive Control", as measured at the low-side of the unit step-up transformer, excluding any station service load fed off the unit terminal bus consistent with the PJM EMS model. This is the minimum MW the unit can sustain while still providing MVAR support, below which less MW output is possible but without any MVAR control range. [

Data Requirements

1. A minimum of two curve points and a maximum of eight curve points must be provided for generating units and synchronous condensers. PJM prefers that eight points be provided to match PJM's EMS State Estimator program requirement.
2. If less than eight points are provided, PJM will expand the curve to eight points by incrementing the MW point by one MW each time to achieve an eight point curve. The MVAR points for each of these additional MW points will be equal to those at the highest MW point provided.
3. The "Unit Maximum Net MVAR Limit" must be greater than (or equal to) the "Unit Minimum Net MVAR Limit" for each curve point.
4. The "Unit Minimum Net MVAR Limit" may be equal for any number of adjacent curve points.
5. The "Unit Maximum Net MVAR Limit" may be equal for any number of adjacent curve points.
6. The "Unit Net MW Output" must be increasing from the first to the last point.
7. Company shall use test or operational data to construct D-curve at min output points. If test or operational data is unavailable at the minimum output, engineering judgment shall be used for the D-curve values.
8. For units that operate as synchronous condensers, an entry is required for a zero MW point that indicates the reactive capability when in condensing mode.
9. For inverter-based Energy Storage Resources, a minimum of three points are required. One for the maximum MW injection to the grid (discharging), zero MW, and one for maximum MW withdrawal from the grid (charging.)
10. For a Hybrid Resource, a single D-curve is tested. Such facilities are tested consistent with the provisions for inverter-based storage Hybrid Resources or relevant resource type without storage specified in the table "TESTING REQUIREMENTS SUMMARY" in Attachment E below.

11. For a Mixed Technology Facility participating in markets as multiple Co-Located Resources, multiple D-curves are tested (one D-curve for each unit at the site).
12. For a Hybrid Resource with a storage component, the composite reactive capability curve shall represent the most conservative capability of the combined Generating Facility at each net MW injection point. See examples in Exhibits 15 & 16 below.

Note:
For inverter-based Energy Storage Resources, the reactive capability should be based on Inverter MVA Capability Curve. See Exhibit 14 for illustration.

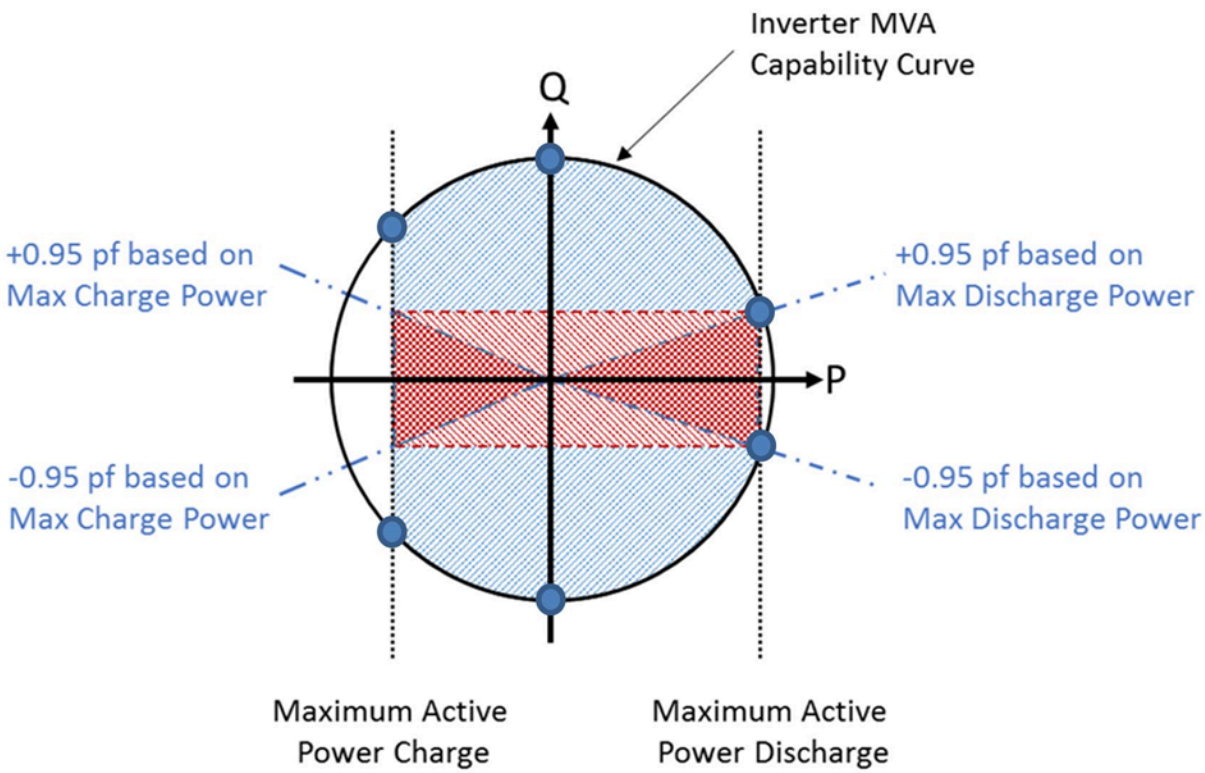

Exhibit 14: Inverter Based ESR Reactive Capability Curve

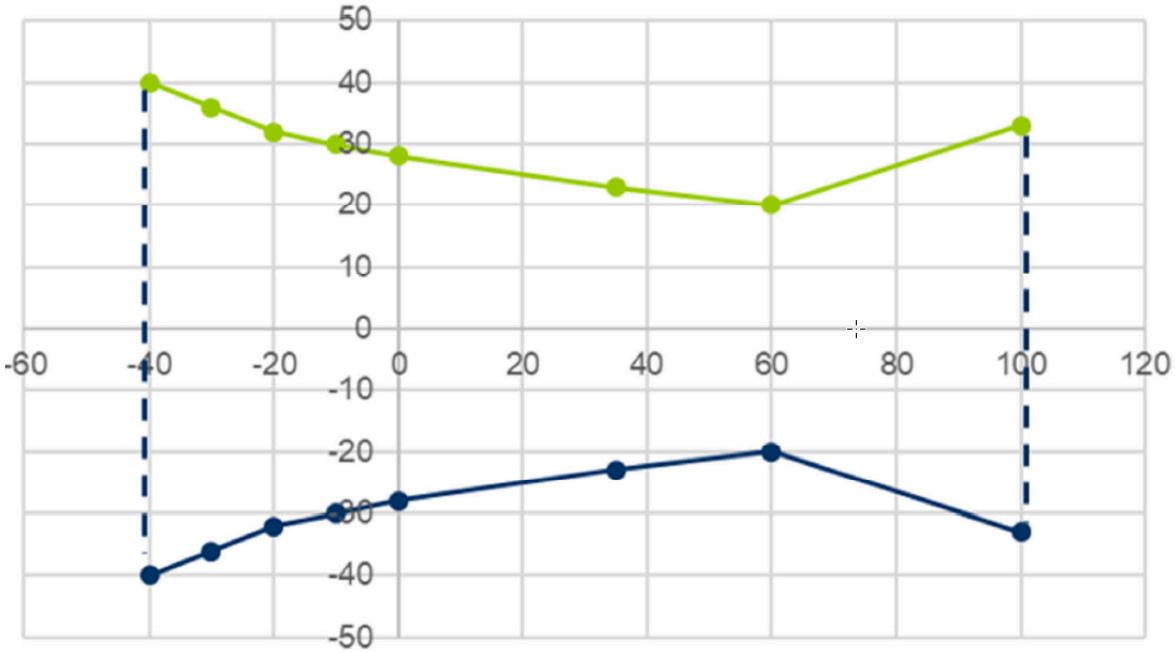

Exhibit 15: Example of inverter-based AC-coupled open-loop Hybrid Resource with 100 MW solar and 40 MW battery.

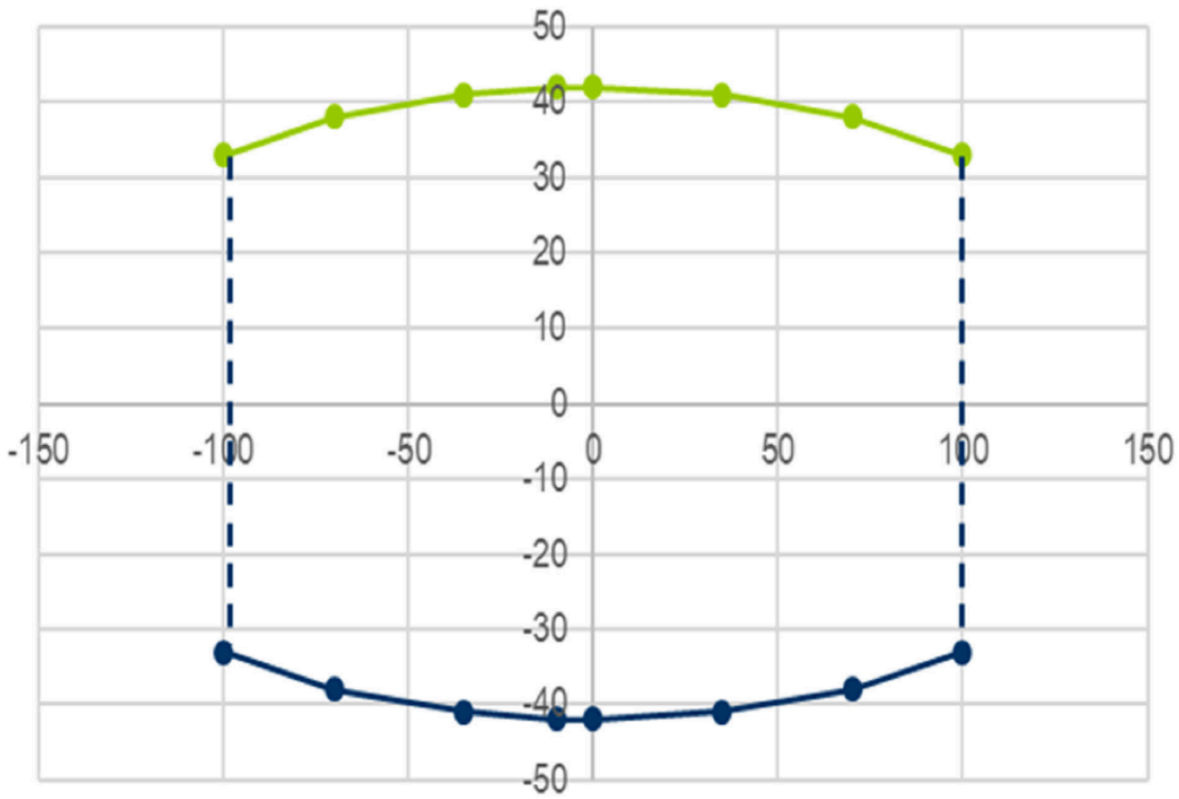

Exhibit 16: Example of inverter-based DC-coupled open-loop solar-storage Hybrid Resource with 100 MW solar and 100 MW battery.

Data Format

Data should be provided to PJM in the format shown in the exhibit below via eDART.

	MW	Minimum MVAR	Maximum MVAR
Point 1			
Point 2			
Point 3			
Point 4			
Point 5			
Point 6			
Point 7			

	MW	Minimum MVAR	Maximum MVAR
Point 8			

Exhibit 17: PJM Unit Reactive Capability Curve Data Format

Referring to Exhibit 17 above, to enhance PJM's State Estimator solution, the following guidelines for submitting new and revised permanent and temporary D curves into eDART should be followed.

1. MW value at Point 1 should be equal to or less than the typical minimum economic output of the unit. For a unit that has synchronous condensing capabilities this MW point should be zero and the Point 2 MW value should be the typical minimum economic output of the unit.
2. Intermediate MW values at Points 2 – 6 should be potential operating points of the unit. For example, these values could be the same as the points on the unit's economic dispatch curve.
3. MW value at Point 7 should be equal to the typical maximum economic output of the unit.
4. MW value at Point 8 should be the maximum possible unit output considering ideal operating conditions such as winter ambient temperatures, low cooling water temperatures, optimum fuel conditions, etc.
5. For units that are "non-dispatchable" where the typical minimum economic and maximum economic outputs are equal, enter MW values at each point one MW above the previous value ending with the typical economic maximum value at Point 7 and the maximum possible unit output at Point 8.

Refer to the following link for examples of eDART D-curves for several unit types including synchronous condensers: http://www.pjm.com/~/media/documents/manuals/manual-links/m14d/d-curve-examples.ashx

PJM Unit Reactive Capability Curve Reporting Process

Each Generation Owner must continually provide accurate permanent capability curve changes to PJM via eDART as soon as the information is available. There are three different cases for submitting permanent changes.

- Initial D-Curve
- Permanent Changes due testing
- Generators not required to test

Initial D-Curve

This section is for new generators that have not tested their capability but meet the general requirements of Attachment E for reactive testing.

1. The Generation ~~Generator~~ Owner, in eDART, will submit a "MVAR" ticket with the "New Default" field checked.
2. The Generation ~~Generator~~ Owner shall enter in the Description field indicating this is the initial or OEM/manufacture D-Curve.
    a. The ticket will be implemented in PJM EMS Network Applications with 50% capability as specified in the eDART ticket if the generator meets the general requirement from Attachment E of this manual to perform reactive capability test.
        i. The PJM Reactive Testing Team will update the eDART ticket to an Active status.
        ii. The PJM Unit Reactive Capability Curves will be updated in the PJM Operating/ Planning Studies and PJM EMS Network Applications programs with 50% capability.

Note: For example, if a unit is capable 100 MVARs at 300 MWs, then the PJM Unit Reactive Capability Curve will be updated to 50 MVARs at 300 MWs in the PJM EMS Network Applications.

Permanent Changes due to testing

This section is for generators that have completed testing in accordance with Attachment E. The expected actions for a permanent reactive capability curve change:

1. The Generation ~~Generator~~ Owner, in eDART, will submit a "MVAR" ticket with the "New Default" field checked.
2. The Generation ~~Generator~~ Owner shall include in the Description field that recent testing was performed.
3. The PJM Reactive Testing team will review the accuracy of the data submitted in the eDART ticket.
4. The PJM Reactive Testing team will take the following actions if the testing data comports with eDART data:
    a. Update the eDART ticket to a Complete status.
    b. Mark complete any previous permanent reactive capability curve tickets as Complete.
    c. The PJM Unit Reactive Capability Curves will be updated in the PJM Operating/ Planning Studies and PJM EMS Network Applications programs with 100% capability.

For wind farms that are rebuilt/repowered, updated reactive capability curves must be submitted to ReactiveTesting@pjm.com as soon as practicable but no later than 6 months after the rebuild/repower is completed.

Generators not required to test

This section is for generators that do not meet the general requirement from Attachment E.

1. The Generation ~~Generator~~ Owner, in eDART, will submit a "MVAR" ticket with the "New Default" field checked.
2. The Generation ~~Generator~~ Owner shall include in the Description field that the generator does not meet the requirements from Attachment E.
    a. The ticket will be implemented at 100% capability.
        i. The PJM Reactive Testing Team will update the eDART ticket to a Complete status.
        ii. The PJM Unit Reactive Capability Curves will be updated in the PJM Operating/ Planning Studies and PJM EMS Network Applications programs with 100% capability.

Real-Time PJM Unit Reactive Capability Reporting Process for Temporary Changes

Whenever a units reactive capability is limited or reduced (or is planned to be limited or reduced) for any reason, the Generation Owner must notify PJM within 30 minutes. Temporary changes should not be submitted for increases in reactive capability. This process **excludes** the time period when a generator is in the startup or shutdown mode.

The expected actions for a temporary reactive capability curve change:

1. The Generation Owner within 30 minutes must enter a "MVAR" ticket via eDART **without** the "New Default" field checked or **with** the "Emergency" field checked.
2. For real time changes, and/or the start time of the eDART ticket, the Generation Owner must notify the PJM Reliability Engineers and respective Transmission Owner by phone.
3. The PJM Reliability Engineer will change the ticket to active and update the unit's reactive capability curve in use by the PJM EMS Network Applications.
4. The Generation Owner must notify the PJM Reliability Engineer and respective Transmission Owner by phone within 30 minutes of whenever the unit's normal reactive capability is restored.
5. The PJM Reliability Engineer will restore the unit's normal reactive capability curve in the PJM EMS Network Applications, and then mark the temporary eDART unit reactive ticket as complete.

PJM Reactive Reserve Check (RRC)

In real-time, PJM uses the Reactive Reserve Check (RRC) to assess the RTO's and its member's position with respect to dynamic and static reactive (var) power. The RRC process, including Generation Owner responsibilities, is described in PJM Manual M03, Transmission Operations, Section 3.12.

Attachment E: PJM Generator and Synchronous Condenser Reactive Capability Testing

E.1 Objective

The objective of reactive capability testing is to improve the transmission system reliability by accurately determining generator and synchronous condenser reactive capability on a regular basis. PJM requires testing to be coordinated between PJM, the testing facility and the local Transmission Owner's (TO) to ensure that the impact on system operations is minimized. Testing is intended to demonstrate reactive capability for those conditions where reactive reserves or voltage control would be required. The testing covered in Attachment E is designed to demonstrate useable reactive capability and, unlike real power (MW) capacity testing, not a maximum capability test. The testing is intended to demonstrate reactive capability of each facility as modeled in PJM's EMS, typically at the low-side of the unit step-up transformer, in order to verify operational data used for PJM real-time assessments. The testing is not intended to demonstrate reactive capability at the point of interconnection with the PJM transmission system. This is consistent with reactive capability reporting specifications outlined in Attachment D of this manual.

It is the intent of these procedures to align with NERC Reliability Standard MOD-025-2 so separate tests to meet the NERC requirements and the PJM requirements are not needed. However, certain differences will remain between M14D, Attachment E and MOD-025-2 to provide continuity with PJM requirements and to provide data for real-time operational needs. Questions regarding reactive capability testing can be sent via email to ReactiveTesting@pjm.com.

E.2 General Requirements

Note that the term "facilities" throughout this Attachment E includes individual generating units, aggregated generating plants including wind farms and solar projects, and synchronous condensers. The requirements in this attachment apply to all applicable facilities within the PJM RTO footprint. The requirements do not apply to PJM Capacity or Energy Resources that are physically located outside the PJM RTO footprint or Reliability Coordinator area.

If a wind farm is rebuilt/repowered, a reactive test must be conducted within 6 months of the rebuild/repower, even if the wind farm previously preformed a reactive test within the last 66 months.

- The following facilities are required to perform reactive capability testing:
    - Individual generating units and inverter-based Energy Storage Resources with a gross nameplate rating greater than 20 MVA and directly connected to the Bulk Electric System

  - Generating plants/facilities with a gross aggregate nameplate rating greater than 75 MVA including inverter-based Energy Storage Resources, and variable resources such as wind, solar, run of river hydro, etc.
  - Synchronous condensers with a gross nameplate rating greater than 20 MVA and directly connected to the Bulk Electric System
  - All generating units providing PJM Black Start Service
  - All other individual units/facilities will verify the reactive capability reported in the PJM eDART system on a periodic basis consistent with PJM Manual 14D.
- Owners of the above facilities are required to test approximately 20% of their applicable facilities annually, totaling 100% of their applicable facilities over a 66 month period. More frequent testing may be done if the owner so chooses.
- The MOC for the operating company of a joint owned generating facility is responsible for scheduling the tests and updating the applicable eDART D-curves as required.
- For the maximum lagging test at maximum real power output for generators and the maximum lagging test for synchronous condensers, the PJM reactive capability testing period will begin on May 1 and continue through September 30. The preferred testing times during these months is between 1200 – 1800 hours on weekdays.
- For the maximum leading test at minimum real power output the preferred time for testing fossil steam units, nuclear units, combined cycle plants, and hydro units that operate as synchronous condensers is during the off peak hours (2300 – 0700 hours EPT) anytime during the year.
- For all other required reactive testing, the owner will determine the best time to conduct the tests. Testing may be conducted in conjunction with other testing (including real power testing), provided all other requirements of the reactive capability tests are met. Facilities should be tested with all auxiliary equipment needed for normal operation in service.
- As an alternative, data collected during routine operation of the facility is acceptable, provided all test requirements are met.
- The tests required are functional and do not require special instrumentation. They are designed to demonstrate that the ratings can be obtained for the time periods required under normal operating conditions for the equipment being tested.
- Projected system conditions must permit the unit/facility to operate at the required real power and reactive power output without adversely impacting system operations.
- PJM will consider other test periods on a case by case basis, so long as proposed testing periods do not adversely impact system operations.

Note:
Procedures for real-power testing are contained in PJM Manual 21B - Rules and Procedures for Determination of Generating Capability and the PJM eGADS User Manual.

E.3 Testing Requirements

- For all applicable generating facilities except variable resources such as wind and solar, maximum over-excited (lagging) and maximum under-excited (leading) reactive capability tests at the maximum real power output the facility is expected to operate (e.g. Economic Maximum) are required. The maximum lagging reactive capability test should be conducted for a minimum of one hour. Data for the maximum leading reactive capability test may be recorded as soon as a limit is encountered.
- For variable resources such as wind and solar, maximum over-excited (lagging) and maximum under-excited (leading) reactive capability tests are required. Tests should be conducted during high output periods and must have at least 90% of the wind turbines or photovoltaic inverters at a site. Data for these tests may be recorded as soon as a limit is encountered.
- For all applicable generating facilities except nuclear powered generating units and variable resources such as wind and solar, maximum over-excited and maximum under-excited reactive capability tests at the minimum real power output the facility is expected to operate (e.g. Economic Minimum) are required. Data for these tests at minimum real power output may be recorded as soon as a limit is encountered.
- Applicable hydroelectric generating facilities (e.g. run of river, pumped storage) shall perform maximum leading and maximum lagging tests at maximum real power output and at minimum real power output. The maximum lagging reactive capability test at maximum real power output should be conducted for a minimum of one hour. Data for maximum leading at maximum real power output and for tests at minimum real power output may be recorded as soon as a limit is encountered.
- For synchronous condensers the over-excited reactive capability test should be conducted for a minimum of one hour. Data for the under-excited reactive capability test may be recorded as soon as a limit is encountered.
- For all applicable generating facilities that may operate for PJM as synchronous condensers to provide reactive support, the maximum over-excited (lagging) and maximum under-excited (leading) reactive capability tests shall also be performed with the unit operating in the synchronous condensing mode. The maximum lagging reactive capability test should be conducted for a minimum of one hour. Data for maximum leading reactive capability may be recorded as soon as a limit is encountered.
- Generating Facilities that are not required to perform a PJM reactive capability test, but still want to coordinate a reactive test with PJM for other purposes, such as testing for the purpose of filing with the FERC for reactive revenues via Schedule 2 of the PJM OATT, must conduct all tests based on unit type in accordance with requirements summarized in the table below.

TESTING REQUIREMENTS SUMMARY

UNIT TYPE	MW OUTPUT	MVAR OUTPUT	TEST DURATION
FOSSIL, HYDRO ELECTRIC, BLACKSTART	MAX	MAX LAG	ONE HOUR
	MAX	MAX LEAD	WHEN LIMIT REACHED
	MIN	MAX LAG	WHEN LIMIT REACHED
	MIN	MAX LEAD	WHEN LIMIT REACHED
SYNCHRONOUS CONDENSER or GENERATOR THAT OPERATES IN THE SYNCHRONOUS CONDENSING MODE TO PROVIDE REACTIVE SUPPORT	N/A	MAX LAG	ONE HOUR
	N/A	MAX LEAD	WHEN LIMIT REACHED
NUCLEAR	MAX	MAX LAG	ONE HOUR
	MAX	MAX LEAD	WHEN LIMIT REACHED
VARIABLE (Wind & Solar) (Testing done with at least 90% of turbines or inverters on line)	VARIABLE	MAX LAG	WHEN LIMIT REACHED
	VARIABLE	MAX LEAD	WHEN LIMIT REACHED
INVERTER-BASED ENERGY STORAGE RESOURCES	ZERO	MAX LAG	WHEN LIMIT REACHED
	ZERO	MAX LEAD	WHEN LIMIT REACHED
Max MW Output = fully discharging	MAX	MAX LAG	WHEN LIMIT REACHED
	MAX	MAX LEAD	WHEN LIMIT REACHED
Min MW Output = fully charging	MIN	MAX LAG	WHEN LIMIT REACHED
	MIN	MAX LEAD	WHEN LIMIT REACHED

UNIT TYPE	MW OUTPUT	MVAR OUTPUT	TEST DURATION
DC-COUPLED INVERTER BASED HYBRID RESOURCES	ZERO	MAX LAG	WHEN LIMIT REACHED
	ZERO	MAX LEAD	WHEN LIMIT REACHED
Max MW Output = fully	MAX	MAX LAG	WHEN LIMIT REACHED
discharging/producing	MAX	MAX LEAD	WHEN LIMIT REACHED
Min MW Output = fully charging with	MIN	MAX LAG	WHEN LIMIT REACHED
no production (or 0 MW net output if facility cannot charge from grid)	MIN	MAX LEAD	WHEN LIMIT REACHED
AC-COUPLED INVERTER BASED HYBRID RESOURCES			
Zero net MW point must reflect the most	ZERO	MAX LAG	WHEN LIMIT REACHED
conservative capability at that power level,	ZERO	MAX LEAD	WHEN LIMIT REACHED
for example with a battery at full charging and generation output matching as close to battery charge power as practicable.			
Max MW Output =	MAX	MAX LAG	WHEN LIMIT REACHED
fully discharging/producing	MAX	MAX LEAD	WHEN LIMIT REACHED
Min MW Output = battery fully charging	MIN	MAX LAG	WHEN LIMIT REACHED
and generation at 0 MW (if facility cannot charge from grid, omit this point).	MIN	MAX LEAD	WHEN LIMIT REACHED
Max inverter operating point (MXIOP)=	MXIOP	MAX LAG	WHEN LIMIT REACHED
generation as close to full output as practicable and battery at full charging.	MXIOP	MAX LEAD	WHEN LIMIT REACHED
*Additional test points may be required if these do not capture the most restrictive capability scenarios.			

- For generating units of 20 MVA or less that are part of a plant greater than 75 MVA in aggregate, record data either on an individual unit basis or as a group. Units providing PJM Black Start Service shall provide test data on an individual unit basis.
- A steady real power output shall be maintained during the test.
- Generation or synchronous condenser stations that have multiple facilities that require testing shall perform tests on only one facility at a time. The remaining operating facilities at the station shall operate normally.
- Facilities are to be tested with the automatic voltage regulator operating in service and while maintaining the voltage within normal operating limits on the system bus (pre- and post-contingency voltage limits).

- To achieve optimal test results, deviations from the assigned voltage schedule may be allowed with permission from PJM and the TO. Coordination between the facility owner, the TO, PJM, and other facilities in the area will be required in order to allow the facility being tested to demonstrate its maximum reactive capability while maintaining system voltages within acceptable limits.
- For hydrogen-cooled generators and synchronous condensers, the hydrogen pressure should be raised to the normal operating pressure. If the facility cannot be operated at its normal hydrogen pressure the test shall be postponed until this condition is corrected.
- When the maximum over-excited and under-excited reactive output during the test is achieved, the MW and MVAR outputs at the generator/synchronous condenser terminals (low-side gross), auxiliaries, the generator/synchronous condenser step-up transformer (GSU) primary (low-side net, after auxiliaries), and the GSU secondary (high-side net) should be recorded. All other applicable data on the reporting forms shall also be recorded.
- If metering is unavailable, it may be necessary to calculate some of these quantities. A note should be provided in the “Remarks” section of the data reporting forms for points which are calculated.
- PJM will evaluate the reported values as compared to the default eDART D-curve values and contact the owner as required to validate the data. The test data will normally serve as the basis for modifying the default reactive curves within eDART.
- During the test, the scheduled and actual voltages at the system bus and the generator/synchronous condenser terminals should be recorded. In addition, nameplate GSU/Synchronous Condenser SU transformer impedance, MVA rating, primary and secondary voltage ratings and available tap settings, and existing tap setting should be provided.
- The reasons for any limit to reactive capability during the test should also be specified (for example, reactive capability curve limit, minimum excitation limiter settings, field current limitation, generator/synchronous condenser voltage, auxiliary bus voltage, system voltage limits, generator/synchronous condenser vibration, generator/synchronous condenser temperatures, hydrogen pressure restriction, shorted rotor turns, operating procedure limit, etc.) in the remarks section.

E.4 Notification and Reporting Requirements

E.4.1 MOC (or TO if testing a synchronous condenser) Actions

- Proposed testing dates/times should be communicated via eDART to PJM Dispatch, PJM Reliability Engineer and the TO no later than noon 3 business days prior to the test, ensuring testing impacts are incorporated into day-ahead studies. PJM and TOs will consider shorter notification times and try to accommodate reactive testing while ensuring that operating limits are not violated.
- The test notification shall be submitted using a “MVAR Test” Ticket which should include the test duration, notes in the Description field on the type of test or tests that are planned to be performed, as well as any additional relevant information for the test.

- Prior to the test scheduling, the MOC (Generation Owner) or TO (Synchronous Condenser Owner) shall verify with the plant and the PJM Reliability Engineer that telemetered MW and MVAR data is accurate and consistent. See PJM Manual 1, Control Center and Data Exchange Requirements for metering requirements. This data check shall be done comparing the plant data that will be recorded at the plant and entered on the test forms, the MOC data (TO data for Synchronous Condenser), and PJM's data to insure accuracy and consistency between all entities. If issues are identified, they are required to be resolved before proceeding with testing the facility. If the test is performed and data inconsistencies are discovered during PJM's analysis of the test, a retest may be required.
- Any scheduled or unscheduled maintenance work on the facility scheduled for testing which may affect the reactive capability of the unit must be complete and all related eDART tickets cleared prior to contacting PJM for the purpose of initiating the study process.
- The MOC (or TO for synchronous condenser testing) will contact PJM Reliability Engineer at least three hours prior to the start of the scheduled testing in order to initiate the real-time study process.
- Real-time testing must be coordinated with the TO and PJM Power Dispatchers. At least 30 minutes notice should be provided to allow PJM and the TO operators to adjust the system to ensure testing does not result in voltage limit violations.
- The TO will coordinate any required transmission mitigation steps to resolve internal generating plant limitations as reported by the plant or the MOC with PJM Reliability Engineer.

Note:
If during the test a unit is unable to achieve its stated capability due to external operational limitations or internal operational limitations caused by an external condition, such as high or low transmission system voltage, the plant or the MOC must communicate this issue to the TO and the PJM Reliability Engineer prior to completing the test. The TO and PJM will work together and attempt to adjust the transmission system voltage and mitigate the external condition. If the actions of the TO and PJM cannot mitigate the external operational limitations or internal operational limitations caused by an external condition the PJM Reliability Engineer will provide confirmation to the MOC that their unit(s) did not meet the stated reactive capability due to an external limitation, and no further actions will be required of the MOC for said unit(s). The PJM Reliability Engineer will document that the unit could not achieve its stated capability due to an external limitation and will log the external limitation on the applicable eDART reactive test ticket.

- If testing must be canceled or rescheduled, the MOC (or TO for synchronous condenser testing) will inform the PJM Reliability Engineer as soon as possible.
- The MOC (or TO for synchronous condenser testing) will coordinate the implementation of their portion of the exit strategy with PJM, if required.

- Generation Owner shall enter and save reactive testing results in eDART by creating a Reactive Result Ticket within 30 calendar days after completion of the testing. If portions of the test are completed on separate days (e.g. tests at minimum output completed on day 1 and tests at maximum output completed 90 days later) all test data shall be entered and saved within 30 days after each portion of the test, and eDART D-curves updated appropriately. All portions of reactive testing on a facility shall be completed within six calendar months after the initial test, with result data entered and saved on a Reactive Result Ticket and ticket status set to PJM Review; otherwise, PJM will consider the test invalid. Separate notifications are required if portions of the testing are planned to be done on separate days.

E.4.2 TO Actions

- The appropriate TOs will conduct studies in accordance with established company procedure in order to determine the effect of scheduled testing on their systems.
- The TO should contact the PJM Reliability Engineer with any possible concerns regarding the scheduled testing.
- The TO support staff will ensure that the TO operators are aware of scheduled reactive capability tests and communicate the pre-studied mitigating action plan.
- Prior to studying the test, the TO will verify, with the PJM Reliability Engineer and the generating station or synchronous condenser station, the expected MW and MVAR output levels of the unit during testing, and ensure that the AVR is in service.
- The TO will contact the PJM Reliability Engineer no later than two hours and 15 minutes prior to the scheduled test start time in order to discuss the results of their studies and the mitigating steps required, if any.
- The TO will discuss, coordinate, and implement any actions necessary as required by mitigation strategies with PJM prior to the start of testing.
- The TO will communicate MVAR output step changes to the testing facility in coordination with PJM. In general, MVAR step changes should be no greater than 100 MVAR increments.
- If testing must be canceled or rescheduled, the TO will inform PJM Reliability Engineer as soon as possible.
- The TO will coordinate the implementation of their portion of the exit strategy with PJM, if required.
- The TO will coordinate all actions through the PJM Reliability Engineer or Power Dispatcher.

E.4.3 PJM Actions

- All testing requests will be reviewed by the PJM Reliability Engineers and Power Dispatchers to ensure that there is no conflict between the testing and any planned transmission outage. PJM will give the MOC (or TO for synchronous condenser testing) a suggestion for a more appropriate date and time to conduct the test, if necessary.

- The PJM Reliability Engineer and Power Dispatcher will review and approve the test in accordance with the established PJM procedure.
- The PJM Reliability Engineer will ensure that PJM dispatch is aware of scheduled reactive capability tests and communicate the pre-studied mitigating action plan to PJM control room staff.
- Once the PJM Reliability Engineer is contacted by the MOC (or TO for synchronous condenser testing), they will contact the TOs of all regions concerned in order to initiate the transmission study process. They will verify the expected unit output levels with the MOC (or TO for synchronous condenser testing) and ensure that the AVR is in service.
- The PJM Reliability Engineer will re-evaluate the pre-studied mitigating action plan prior to test commencement and communicate any necessary adjustments to the impacted parties.
- The PJM Reliability Engineer and/or Dispatch will discuss possible mitigation strategies with the appropriate TOs.
- The PJM Reliability Engineer will contact the MOC (or TO for synchronous condenser testing) no later than two hours prior to scheduled testing to inform them whether mitigation steps will be required.
- The PJM Reliability Engineer will coordinate with the appropriate MOCs and TOs in order to implement the selected mitigation strategy.
- The PJM Reliability Engineer will coordinate with the TO and MOC in making MVAR output step changes with the testing unit.
- If the testing must be cancelled or rescheduled, PJM Reliability Engineer will contact the MOC and TOs as soon as possible.
- The PJM Reliability Engineer will coordinate the implementation of the exit strategy with the MOC and TOs, if required.
- The PJM Reliability Engineer will coordinate all actions and communications between the MOC and TOs.

E.5 Test Cancellation

PJM dispatch and/or the impacted parties may cancel the generator reactive capability testing for the following reasons:

- Internal planning issues.
- Emergency procedures.
- Inability to control actual or post-contingency voltage issues created by scheduled testing.
- Any operating issues created on TO equipment not monitored by PJM.

Cancellation of the reactive capability test will be communicated to all impacted parties.

PJM will document all cancellations and terminations including the party responsible and the reason for the cancellation or termination.

E.6 Voltage Schedules

Adjustments may need to be made to local voltage schedules in order to accommodate the scheduled testing. These adjustments will be considered and studied on a case by case basis. To obtain better test results, units at the same location of the testing unit may elect to operate at the upper or lower end of their assigned voltage schedule's bandwidth.

Operating beyond the assigned voltage schedule may be acceptable based on PJM's real-time and contingency analysis. All parties must be informed and in agreement prior to this occurring.

PJM will discuss the changes with the appropriate TO and if the recommendation does not cause a violation of a defined limitation, the TO should implement the PJM request.

PJM will retain its control of the reactive facilities, such as transmission capacitors, LTCs, and generator MVAR output.

If internal plant or TO limits restrict the request, PJM dispatch will study the limitations and recommend changes if appropriate.

If the recommended changes cannot be implemented due to equipment or facility limitations, other options will be considered, including test cancellation or rescheduling.

E.7 Exit Strategy

E.7.1 Risk

PJM will not allow scheduled reactive capability testing to place the system in an unacceptable state. However, there is always the possibility of equipment failure resulting in unplanned situational constraints that would require immediate remedial action.

E.7.2 Requirements

The following are steps that will be considered and agreed upon prior to allowing the scheduled reactive capability testing:

- Each scheduled test will be studied and approved on a case by case basis.
- All required mitigation steps will be agreed to and coordinated with all concerned parties, to include PJM Reliability Engineer, the responsible MOC, and the appropriate TOs, prior to the scheduled testing.

E.7.3 Parameters

PJM will NOT allow operation over any applicable post-contingency emergency rating.

PJM will NOT allow operation over any applicable pre-contingency normal rating.

In the event of a facility rating discrepancy between PJM and the TO that cannot be resolved, PJM will default to the most conservative limit.

In the event that the testing results in an unexpected thermal or voltage violation, standard mitigation steps will be taken to return the facilities in violation back to normal limits within applicable timeframes.

The mitigation steps taken will not cause limit violations on any other company's equipment or facilities.

E.8 Post-Test Evaluation

PJM will typically analyze the reactive capability test results within 60 days of receipt of the test data and provide feedback to facility owners on the status of their reactive capability test results. PJM will also provide the results of generation reactive capability tests to the appropriate TO operator.

E.8.1 Test Evaluation

PJM will evaluate each facility's reactive capability test results against its stated reactive capability limits modeled within eDART and the PJM EMS. This evaluation will determine which units performed over, under, or within 5% of their stated limits for the maximum lagging test at maximum real power output and the maximum leading test at minimum real power output, as well as what follow-up steps are necessary to ensure that the correct information is modeled within eDART and the PJM EMS.

E.8.2 Facilities Testing Within +/-5% of Stated Limits

Facilities with test results within +/-5% of their stated limits for the maximum lagging test at maximum real power output and the maximum leading test at minimum real power output will be considered as having fully demonstrated their stated reactive capability.

PJM will notify the MOC or TO for synchronous condensers that their units achieved their reactive capability, and no further action will be required.

E.8.3 Facilities Testing Over Stated Limits by 5% or More

Facilities with test results exceeding their stated limits by 5% or more for the maximum lagging test at maximum real power output and the maximum leading test at minimum real power output will be considered as having fully demonstrated their stated reactive capability.

PJM will notify the MOC or TO for synchronous condensers, that their units exceeded their stated reactive capability and will request that they increase the reactive capability modeled within the PJM EMS by entering a new default eDART MVAR ticket.

E.8.4 Facilities Testing Below Stated Limits by 5% or More

Facilities with test results under their stated limits by 5%or more for the maximum lagging test at maximum real power output and the maximum leading test at minimum real power output will not be considered as having demonstrated their stated reactive capability.

PJM will determine which units have not demonstrated their stated reactive capability due to either internal or external operational limitations based on reasons documented within the submitted test results.

For units that claimed external operational limitations, tested during the PJM preferred time frames as noted in Section E.2 and followed the procedure described in the Note under Section E.4.1,

- PJM will perform further analysis to confirm external limitations and possible remedial measures in the event of future attempts by the MOC (or TO for synchronous condensers) to demonstrate the facility's reactive capability.
- If an external limitation is confirmed, PJM will provide confirmation to the MOC (or TO for synchronous condensers) that their facility performed below their stated reactive capability due to external limitations and may not require any further action.
- If no external limitation is confirmed, PJM will require that the MOC (or TO for synchronous condensers) either permanently reduce the reactive capability modeled within the PJM EMS by entering a new default eDART MVAR ticket or retest to demonstrate the stated capability of the facility.
- If the MOC (or TO for synchronous condensers) chooses to retest the facility, PJM will require that a temporary eDART MVAR ticket be submitted that will remain active until the facility demonstrates the original stated capability.

For facilities that claimed internal operational limitations,

- If a facility is unable to achieve its stated capability due to an internal operational limit caused by an external condition (such as high or low transmission system voltages), the plant or the MOC (or TO for synchronous condensers) communicated this issue to the TO and the PJM Reliability Engineer prior to completing the test as per the Note under Section E.4.1, and this communication was verified by PJM, then PJM will inform the MOC (or TO for synchronous condensers) that their facility performed below their stated reactive capability due to external limitations and may not require any further action.
- If the internal operational limitation was caused by an external condition but was not communicated by the plant or MOC (or TO for synchronous condensers) to the TO and PJM, then PJM will require that the MOC (or TO for synchronous condensers) either permanently reduce the reactive capability modeled within the PJM EMS by entering a new default eDART MVAR ticket or retest to demonstrate the stated capability of the facility.
- If the MOC (or TO for synchronous condensers) chooses to retest the facility, PJM will require a temporary eDART MVAR ticket be submitted that will remain active until the facility demonstrates the original stated capability.

- For facilities that tested for the initial time and for facilities that are providing data at maximum leading at maximum real power output and maximum lagging at minimum real power output, owners shall update eDART D-curve data to reflect expected operational reactive capability.

Test Evaluation Summary

Test Outcomes and Required Actions *			
Test Type	Results Within 5% of Stated Limits	Results Outside 5% of Stated Limits	Initial Results at Previously Untested Values
Max Lagging at Max Output Max Leading at Min Output	None Required	Submit New eDART Default Reflecting Tested Values #	Submit New eDART Default to Reflect Expected Operational Capability
Max Leading at Max Output Max Lagging at Min Output	None Required	Submit New eDART Default to Reflect Expected Operational Capability #	Submit New eDART Default to Reflect Expected Operational Capability
Max Lagging at Sync Cond Max Leading at Sync Cond	None Required	Submit New eDART Default Reflecting Tested Values #	Submit New eDART Default to Reflect Expected Operational Capability

* For additional details please refer to text within Attachment E.

If a new D-curve is required but not supplied within 30 days, to ensure system reliability, PJM may update the D-curve based on last test.

E.9 Sample eDART Reactive Capability Testing Form

Sample Screenshot – enter data via eDART

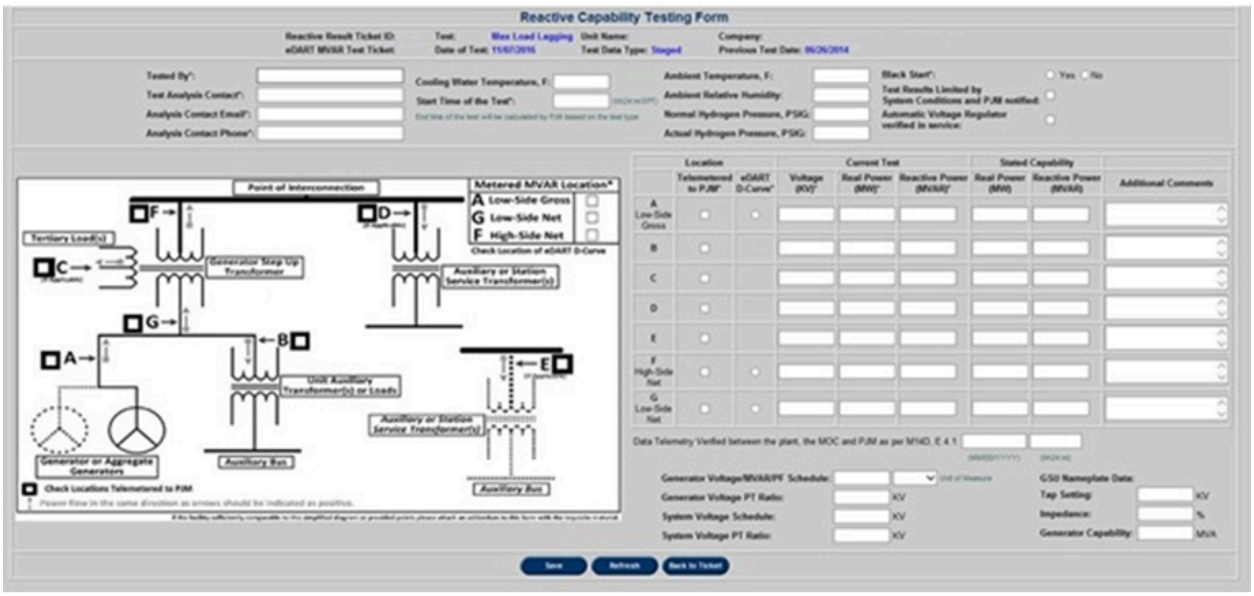

Attachment F: Deleted

Attachment G: Deleted

Attachment H: PJM Generation and Transmission Interconnection Planning Team Role Clarity Diagram

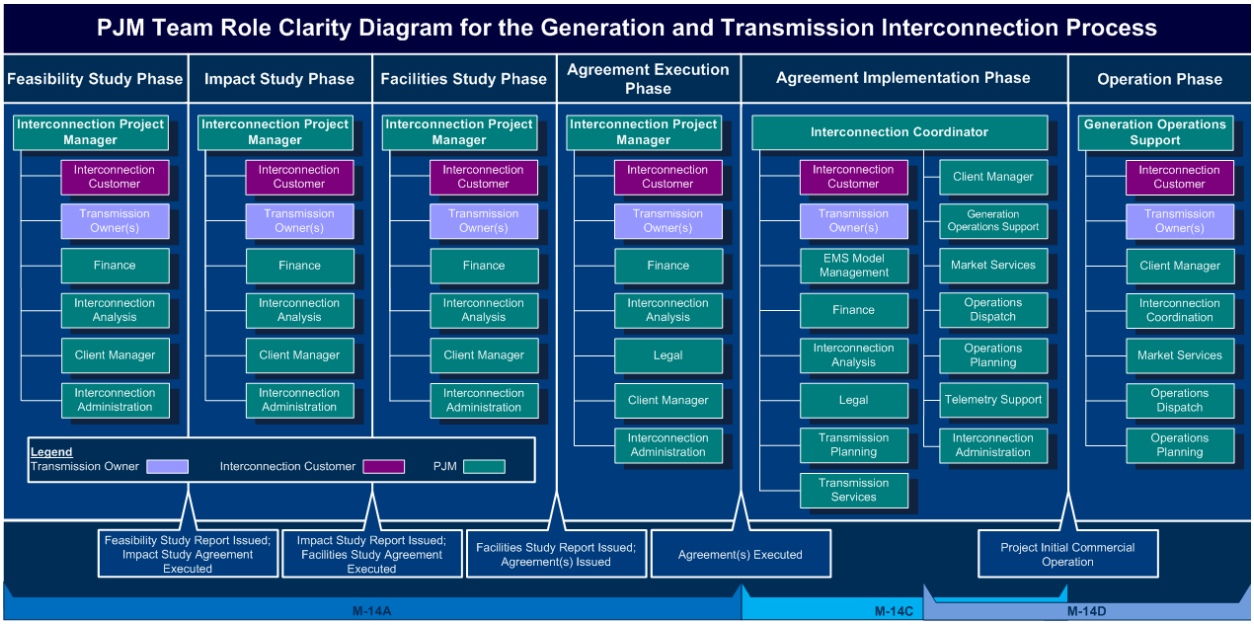

Interconnection Team Role Clarity Design

Attachment I: Deleted

Attachment J: Generator – Data Release Matrix

Generator – Data Release Matrix M14D – Attachment J

_____ (Transmission Owner) requests the following data from PJM for the following unit(s) of _____ (Generation Owner).

An "X" marked in (the Real Time MW, Real Time MVAR, Unit Status, Reactive Capability or Scheduled Outage Data column) indicates that the Transmission Owner requests such data for reliability purposes. Specific unit parameters being requested for restoration planning purposes should be listed in the Parameter Data column.

□ Check this box the unit is identified in a Transmission Owner's restoration plan

Generator Unit Name	Real Time MW	Real Time MVAR	Unit Status	Reactive Capability	Scheduled Outage Data	Parameter Data

Link to Attachment J: http://pjm.com/~/media/documents/manuals/manual-14d-attachment-j.ashx

Attachment K: Deleted

Attachment L: Jointly Owned Resource Communication Model

Dispatch instructions and directives to multiple resource owners delay controlling actions resulting in less efficient market operations and a potential adverse impact to system reliability. Dispatch instructions to a subset of owners at a jointly owned resource may result in customers questioning dispatch instructions or curtailments and additional administrative procedures to ensure fair/equitable reductions to an aggregate plant on a rotating basis. A single SCED basepoint for a jointly owned resource to a single Market Operations Center (MOC) Generation Dispatcher is an effective solution to ensure efficient and reliable operations.

The purpose of this section is to define a dependable real-time communications model to manage jointly owned resources, ensuring:

- A single MOC Generation Dispatcher (single operational contact) for the processing of all real-time dispatch electronic signals and operational issues.
- Specifically for wind and solar resources:
  - Accurate outage data, which is essential for an accurate Wind and Solar Power Forecast
  - Prompt power adjustments in response to SCED basepoint via use of the "Curtailment Indicator" or not, which typically would occur as a last resort just prior to emergency procedures.

Note:
The MOC Generation Dispatchers (single operational contact) will need to meet the PJM certification and training requirements outlined in PJM Manual 40: Training and Certification Requirements.

A single MOC must be responsible for dispatch interactions (i.e., there must be a single operational contact) for all Co-Located Resources at a single Mixed Technology Facility, following either Option 1 or Option 2 below.

Option 1: PJM Operations would prefer a model where there is a single MOC Generation Dispatcher (single operational contact) responsible for the entire jointly owned resource operations. The single contact would be responsible for all day-ahead and real-time bidding into PJM Systems (Markets Gateway), process an SCED basepoint, real-time communications with PJM Dispatch, as well as providing accurate outage information within eDART. Settlements can be allocated by PJM based on ownership shares.

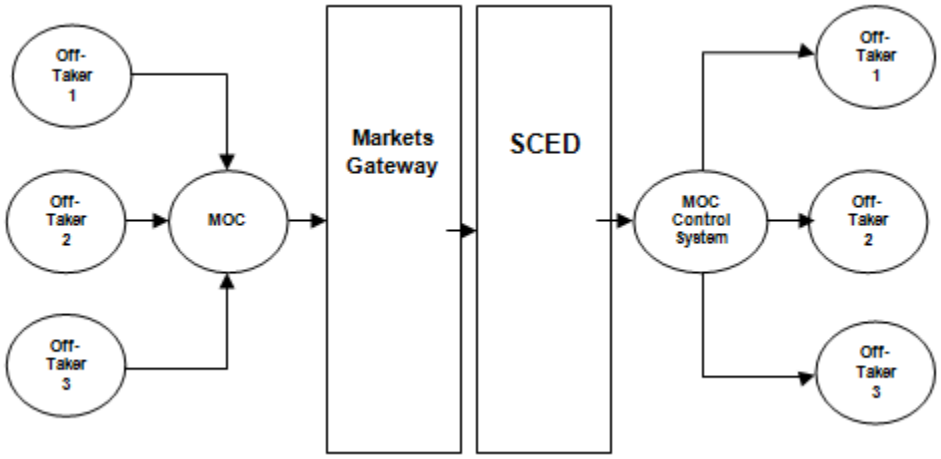

Exhibit 18: Joint Owned Resource Communication Model 1

Option 2: The alternate solution would still require a single MOC Generation Dispatcher (single operational contact) for manual real-time communications with PJM Dispatch, where the operational nature of the situation requires live verbal communications. Each owner/off taker of a jointly owned resource would still be able to interact directly with PJM Dispatch for market related matters, and with Markets Gateway, providing day-ahead offers and hourly updates. The single operational contact would be responsible for all manual real-time communications with PJM Dispatch, as well as providing accurate outage information within eDART. PJM SCED would send individual basepoints to each owner/off taker. Settlements will model individual owner/off takers of a jointly owned resource. Examples of market communications that can be made by individual owner/off takers of a jointly owned resource and examples of manual real-time communications, which must be made by a single operational contact, are set forth below in Exhibit 19. All parties that communicate with PJM Dispatch must meet the training and certification requirements outlined in Manual 40.

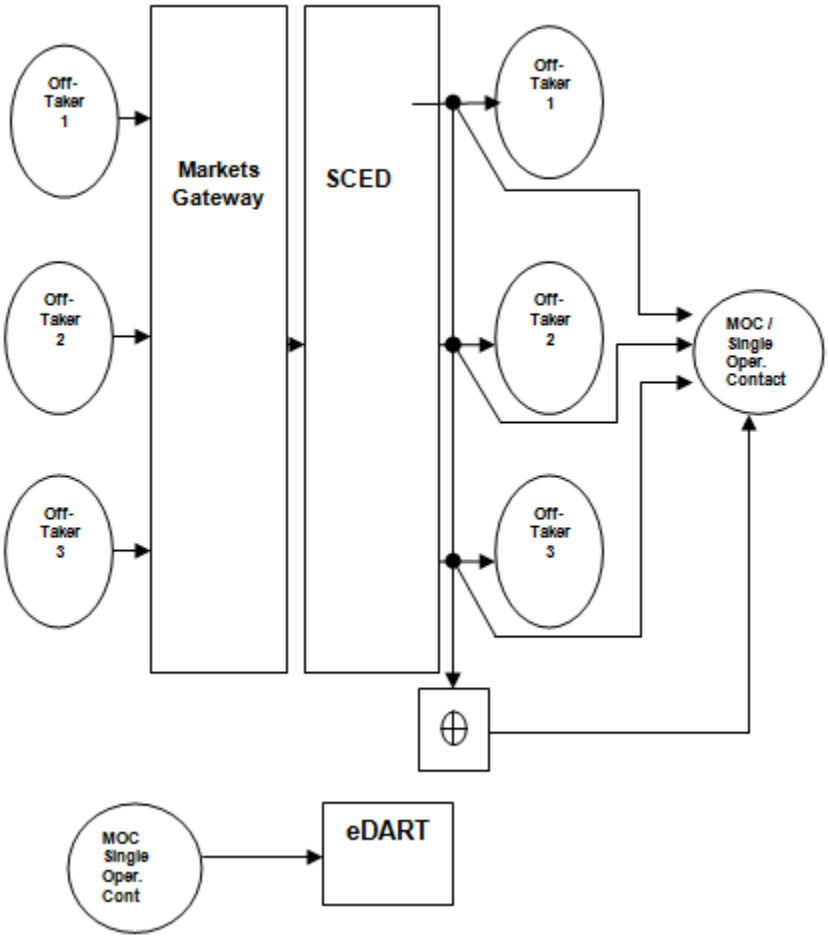

Exhibit 19: Joint Owned Resource Communication Model 2

Markets Related Communications with Dispatch (Directed to each Market Operations Center)	Real-Time Communications with Dispatch (Directed to Single Operational Contact)
Scheduling of unit to run	Manual Dispatch (Congestion Management)
Questions about Market Bid information	Emergency Dispatch (Transmission Issues)
Extension of Day Ahead commitment	Loss of Communications

Markets Related Communications with Dispatch (Directed to each Market Operations Center)	Real-Time Communications with Dispatch (Directed to Single Operational Contact)
Self-Schedule Status	Unit Synchronizes to system / on line status
Unit is released from dispatch	Unit is ready to follow dispatch base points
Regulation 1. Assignments and status 2. Self-Scheduling 3. Testing	Unit Trips
Synchronous reserve assignments	Partial or Complete Outages (Loss of equipment) communicated via eDART
	Testing status (capacity/environmental)

Exhibit 20: Guidelines for Markets and Real-Time Communication between Dispatch and Joint Owned Resource Owners, Option 2.

Attachment M: Wind and Solar Unit Dispatchability Check List

In order to ensure resources do not force emergency procedures, they must be dispatchable in the range between ~~the greater of~~ the resources' physical minimum operating level ~~or Capacity Interconnection Rights (CIR)~~ and the Maximum Facility Output (MFO), i.e., Fixed Gen flag must not be selected. The three requirements for a unit to be dispatchable are:

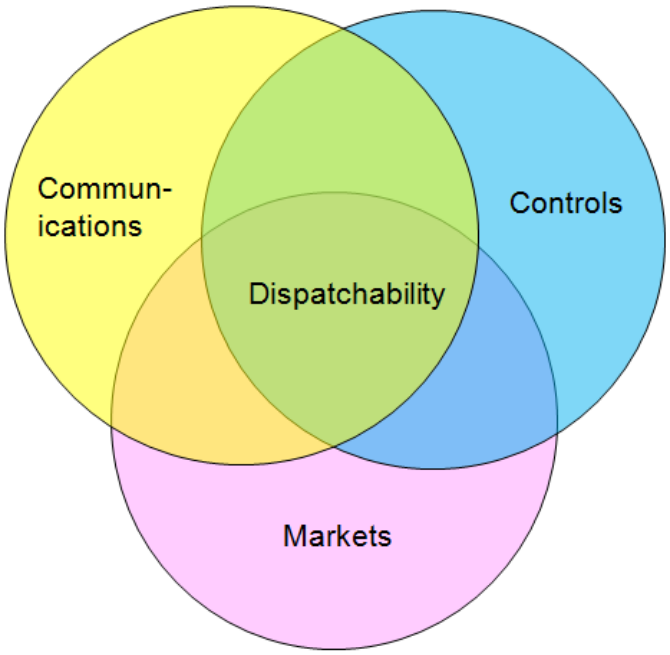

Communications

1. The unit must send active MW; Wind Speed, Wind Direction, Temperature, and Pressure for wind farms; Solar Irradiance and Back Panel Temperature for solar parks via SCADA/ ICCP; values sent to PJM cannot be static or flat-lined for an extended period of time and must be within reasonable limits.
2. The unit must electronically receive control signals, including Economic Basepoint and the Generator On Reason (GENRUNR).The unit must also receive Curtailment Flag if required to maintain Economic Basepoint.
3. All eDART generator outage tickets must be up to date.

Controls

1. The unit must be capable of following electronic control signals as received, i.e. have the physical controls in place to throttle their generation or processes to remove equipment from service. Control signals include Economic Basepoint, Curtailment Flag, and the Generator On Reason (GENRUNR).

Markets

1. **All units shall ~~should~~ follow their Economic Basepoint automatically, ~~even~~ when curtailed by SCED.**
   a. A unit will be dispatched ~~so that its economic basepoint equals its~~ to the resource's effective economic max unless the unit is being curtailed. More details on how Wind and Solar resources are dispatched can be found in PJM Manual 11 Section 2.5.3.6. ~~However, the economic basepoint is ramp rate limited to what the unit can ramp in the next look-ahead interval, at the ramp rate provided by the unit. The look ahead interval is adjustable by system operations based on system conditions and is currently configured at 15 minutes~~.
   b. If the basepoint does not align with expectations,~~doesn't make sense,~~
      i. Check Bid-in EcoMin and Bid-in EcoMax (see 2 below)
      ii. Check Unit Availability status (economic, must run, not available)
      iii. Check for manual overrides (fixed gen flag, unit output)
      iv. Check data quality (wind or solar forecast; other telemetry must be updating)
      v. Check the curtailment flag indicator
2. **All units should update their Economic Minimum and Economic Maximum in Markets Gateway.**
   a. Specifically for wind or solar resources, economic/emergency limits, and Fixed Gen flag status should be updated every 5 minutes or as forecast changes require for RTSCED (T+15 minutes). Hourly parameter updates for economic/emergency limits, and Fixed Gen flag status should be updated every 5 minutes or as forecast changes require for ITSCED (T+2 hours). .
   b. Eco Min should be less than or equal to unit output and CIR (Eco Min ≤ CIR and ≤ Output). More specifically for wind or solar units, Eco Min should represent the lowest MW operating point to insure accurate unit dispatch information for PJM Dispatch.
   c. Specifically for wind or solar units, Eco Max should be greater than or equal to unit output (Eco Max ≥ Output). Eco Max should be updated every 5 minutes or as often as necessary to reflect the current maximum output of the unit to ensure an accurate dispatch signal and proper accounting for PJM's ITSCED.
   d. If Eco Min equals Eco Max, or if the Fixed Gen flag is set to yes, your dispatched basepoint will reflect back (or mirror) the units current output and the unit is considered not dispatchable~~.~~
   e. Wind and Solar resources will be dispatched based on the Effective Economic Maximum as outlines in PJM Manual 11, Section 2.5.6.3.~~If a unit is operating above its Eco Max, the dispatch system will send a basepoint to move the unit to Eco Max.~~

3. **The telemetered Generation Run Reason code (GENRUNR), indicates PJM's 'logged-on' status for the unit:**
   a. These values of GENRUNR mean your unit is dispatchable:
      i. 2 or 17 indicate your unit is operating as Economic.
      ii. 22 indicates your unit is Company Dispatchable.
   b. These values of GENRUNR indicate your unit is not dispatchable:
      i. 16 indicates your unit is Released. Contact PJM Dispatch to have this corrected.
      ii. Other on reasons may cause the unit to be considered not dispatchable, i.e. basepoint mirrors current output (see section 2.d above). Contact PJM Dispatch to have this corrected.

PJM Markets Gateway Users Guide:

~~http://www.pjm.com/~/media/etools/markets-gateway/markets-gateway-user-guide.ashx~~

https://www.pjm.com/-/media/DotCom/etools/markets-gateway/markets-gateway-user-guide-effective-20251001.pdf

Attachment N: Cold Weather Preparation Guideline and Checklist

N.1 Introduction

Based on previous cold weather events the following is meant to provide generators with a guide to lessen and optimistically eliminate these and similar problems during future cold weather events. The list of suggestions and typical problem areas is not meant to be all inclusive. Individual Generation Owners should review their Generating Facility design and configuration, identify areas with potential exposure to the elements, ambient temperatures, or both, and tailor their plans to address them accordingly.

Generation Owners should also use past experiences at the Generating Facility to identify the potential for freezing issues (including potential fuel concerns) and notify PJM if potential measures to address the issue are not available.

This Attachment has been updated to improve alignment with the guidance provided in NERC Generating Unit Winter Weather Readiness Guideline, Revision 4.

N.2 Management Roles and Expectations

Management plays an important role in maintaining effective winter weather programs. The management roles and expectations below provide a high-level overview of the core management responsibilities related to winter weather preparation. Each entity should tailor these roles and expectations to fit within their own corporate structure:

Senior Management

Set expectations for safety, reliability, and operational performance

Ensure that a winter weather preparation procedure exists for each operating location

Consider a fleet-wide annual winter preparation meeting, training exercise, or both to share best practices and lessons learned

Share lessons learned across the fleet and through industry associations (formal groups or other informal networking forums)

Note: Generation Owners are responsible for ensuring that generation resources are properly prepared for cold weather operation, even if the Generating Facility is managed and/or operated by a third party.

Plant Management

Ensure development of a cold/winter weather preparation program and consider appointing a designee responsible for keeping its processes and procedures updated with industry identified best practices and lessons learned

Ensure the site-specific winter weather preparation procedure includes processes, staffing plans, and timelines that direct all key activities before, during, and after severe winter weather events

Ensure proper execution of the winter weather preparation procedures

Conduct a Generating Facility readiness review prior to an anticipated severe winter weather event

Encourage Generating Facility staff to look for areas at risk due to winter conditions and bring up opportunities to improve readiness and response

Following each winter, conduct an evaluation of the effectiveness of the winter weather preparation procedure and incorporate lessons learned

N.3 Pre-Winter Season Items - All Generating Facilities

Based on previous cold weather events, a list of typical problem areas is provided below. This is not meant to be an all-inclusive list. The list has been split into two sections to assist with the identification of issues seen at conventional generators and inverter-based resources. Generation Owners should review their Generating Facility design and configuration, identify areas where critical components' potential exposure to the elements, ambient temperatures, or both might cause issues and tailor their plans to address them accordingly.

Safety

Safety remains the top priority during winter weather events. Job safety briefings should be conducted during preparation for and in response to these events. Robust safety programs to reduce risk to personnel include identifying hazards involving cold weather, such as personnel exposure risk, travel conditions, and slip/fall issues due to icing.

A job safety analysis (JSA) should be completed to address the exposure risks, travel conditions, and slips/falls related to icing conditions. Winter weather alerts should be communicated to all impacted Generating Facilities.

A business continuity and emergency response plan should also be available and communicated in the event of a severe winter weather event. Review snow removal and de-icing plans, especially for wind and solar facilities. Regularly assess potential safety hazards that may be introduced by the presence or accumulation of snow/ice.

Training

Generation Owners should coordinate annual winter training, specific to the Generating Facility. This should include:

- response to freeze protection panel alarms,
- troubleshooting and repair of freeze protection circuitry,
- identification of Generating Facility areas most affected by winter conditions,
- review of special inspections or rounds implemented during severe weather,
- fuel switching procedures,
- knowledge of the ambient temperature for which the freeze protection system is designed, and
- lessons learned from previous experiences or the NERC Lessons Learned program.

Personnel Preparation

- Hold winter readiness meetings on an annual basis to prepare for severe cold weather operation before the winter begins highlighting preparations and expectations.
- Assign, prioritize and schedule tasks.
- Review and act on lessons learned from prior cold weather operation.

Communications

- Ensure appropriate communication protocols are followed during a severe winter weather event.
- Identify a back-up communication option in case the primary system is not working (e.g. satellite phone).
- Ensure communication is discussed as part of the job safety briefing during a severe winter weather event.

Maintain Substation Equipment

- Ensure that the SF6 gas in breakers and metering and other electrical equipment is at the correct pressure and temperature to operate safely during extreme cold, and also perform annual maintenance that tests SF6 breaker heaters and supporting circuitry to assure that they are functional.
- Maintain the operation of power transformers in cold temperatures by checking heaters in the control cabinets, verifying that main tank oil levels are appropriate for the actual oil temperature, checking bushing oil levels, and checking the nitrogen pressure if necessary.
- Determine the ambient temperature to which equipment, including fire protection systems, is protected (taking into account the accelerated cooling effect of wind), and ensure that temperature requirements are met during operations.

N.4 Equipment Preparation - Conventional Generating Facilities

Identify and prioritize components, systems, and other areas of vulnerability that may experience freezing problems or other cold weather operational issues.[11]

Prepare and review Generating Facility-specific emergency operating plans for winter weather. Review cold weather scenarios affecting equipment, taking into account the effects of precipitation and wind. Include review of systems, equipment, or protection systems that may have been changed or have degraded over time. Ensure all engineered modification and construction activities are performed such that the changes maintain winter readiness for the Generating Facility.

Schedule any routine cold weather inspections, repairs, and winterization work to be completed prior to the local seasonal freeze date. Depending on the Generating Facility,further checks and winterization activities might be needed prior to forecasted extreme weather events as described below,

Depending on the Generating Facility, further checks and winterization activities might be needed prior to forecasted extreme winter events as described below.

Winterization efforts should include addressing critical components and systems that have the potential to:

- Initiate an automatic unit trip,
- Impact unit start-up,
- Initiate automatic unit runback schemes or cause partial outages,
- Cause damage to the unit,
- Adversely affect environmental controls that could cause full or partial outages,
- Adversely affect the delivery of fuel or water to the units,
- Cause other operational problems such as slowed or impaired field devices, or
- Create a safety hazard.

Preform a walk down of the Generating Facility to correct identify:

- Broken/damaged/degraded doors and windows.
- Degraded missing lagging on exterior piping.
- Heat tracing equipment damage.
- Damaged instrument air lines,
- Locations of standing water.

[11] https://www.nerc.com/comm/RSTC_Reliability_Guidelines/Reliability_Guideline_Generating_Unit_Winter_Weather_Readiness_v4.pdf

- Erect secondary wind barriers as deemed appropriate to protect critical instrument cabinets, heat tracing and sensing lines.
- Evaluate piping insulation and correct deficiencies that may allow water infiltration which would result in freezing during cold weather.
- Install heated blankets on critical water lines as required to prevent freezing.
- Drain any non-critical service water lines in anticipation of severe cold weather.
- Check heat tracing on critical lines and pipes monitored throughout winter weather events to ensure the circuits are functional.
- Evaluate the use of infrared cameras, and other technologies, to inspect critical heat circuits.
- Place thermometers in rooms containing equipment sensitive to cold and in freeze protection enclosures to ensure that temperature is being maintained above freezing and to determine the need for additional heaters or other freeze protection devices. Pre-position heaters in known problem areas.
- Evaluate whether there is sufficient electrical circuits and capacity to operate portable heaters, and perform preventive maintenance on all portable heaters prior to cold weather.
- Install temporary heaters and ducting as required to prevent the formation of ice and snow on the surface of air inlet filters.
- Consider pre-warming, operating at full speed no load, early start-up, and/or putting on turning gear scheduled units prior to a forecasted severe winter weather event.
- Prepare units that have been off line for lengthy periods of time for start-up and operation during severe winter weather events.
- Develop cooling tower operating procedures for cold weather that specifies the cycling of fans to minimize the forming of icicles.
- Monitor instrument air systems year - round and maintain or upgrade instrument air drying systems as required to ensure a continuous supply of moisture-free instrument air to control valve actuators, etc.
- Develop a plan for the removal of debris at Generating Facility's intake structure given the potential of freezing conditions.
- Consider issues that could result in slowed valve/damper operation.
- Store lube oil and greases for mechanical equipment necessary to support generation in heated locations not exposed to weather.
- Protect and heat areas with lead acid batteries or other batteries and UPS systems in locations that need to be protected from weather.
- Potential vulnerabilities associated with emergency generators, including Blackstart Resources, should be evaluated when developing the site-specific winter weather preparation procedure(s) as they may provide critical system(s) backup.
- For combustion turbines, ensure that manual corrective actions are proactively taken when unexpected icing may occur due to intermittent interference from outside sources of warm,

moist air streams from rivers, lakes, or oceans or near artificial sources that emit warm, saturated air streams, such as cooling tower plumes, exhaust stack plumes, blowdown tank vents, or flash tank vents.

- Develop a list of critical instruments and transmitters, including telemetry cabinets that require increased surveillance during severe winter weather events.

Evaluation of Critical Components

The following is a list of critical components, mainly taken from NERC Generating Unit Winter Weather Readiness Guideline that should be included and evaluated in conjunction with preparation of Generating Facility for cold weather operations.

- Critical level transmitters
  - Drum level transmitters and sensing lines
  - Condensate tank level transmitters and sensing lines
  - De-aerator tank level transmitters and sensing lines
  - Hotwell level transmitters and sensing lines
  - Fuel oil tank level transmitters/indicators
- Critical pressure transmitters
  - Gas turbine combustor pressure transmitters and sensing lines
  - Feed water pump pressure transmitters and sensing lines
  - Condensate pump pressure transmitters and sensing lines
  - Steam pressure transmitters and sensing lines
- Critical flow transmitters
  - Steam flow transmitters and sensing lines
  - Feed water pump flow transmitters and sensing lines
  - Natural gas or liquid fuel flow transmitters and sensing lines
- Instrument air system
  - Verify that automatic blow downs, traps, dew point monitoring, and instrument air dryers are functioning correctly within acceptable parameters
  - Ensure that low point drain lines are periodically drained by operators to remove moisture during extreme cold weather
- Motor-operated valves, valve positioners, and solenoid valves
- Drain lines, steam vents, and intake screens
- Water pipes, water treatment, and fire suppression systems
  - Low/no water flow piping system
- Fuel supply, materials, and ash handling
  - Coal piles, other solid fuel storage, and handling equipment

  - Transfer systems for backup fuel supply
  - Gas supply regulators, other valves, and instrumentation (may require coordination with gas pipeline operator)
  - Fuel oil heaters and flow control devices
  - Ash disposal systems and associated equipment
  - Lime storage and transfer equipment
- Tank Heaters
  - Conduct initial tests
  - Check availability of spare heaters
  - Record current tank indicators for sodium-based solution injection systems, flue gas desulfurization systems, dibasic acid additives, mercury control additives, etc
- Lube oil and greases for mechanical equipment necessary to support generation in locations that may be exposed to cold weather
- Ensure batteries and uninterruptible power supply systems critical to the functioning of the facility are housed in temperature-controlled locations and protected from weather
- Functional heat tracing, insulation, and temperature responsive ventilation (heaters, fans, dampers, and louvers) based on expected weather conditions
- Adjust operation of cooling tower fans, deicing rings, and riser drains to prevent icing
- Operation of necessary equipment to prevent accumulation of ice or snow on combustion turbine air inlet filter medium
- Steam soot-blowing systems (transmitters, regulators, drain valves, and traps)

Fuel and Environmental Preparation

- Review fuel quality and quantity available
- Inform PJM of fuel type being used during each operating day for dual fuel units via the PJM Markets Gateway system. Ensure that up to date schedules for the alternative fuels are entered into Markets Gateway in case they are needed during the operating day.
- Review Generating Facility environmental permits to determine if there is the potential of requesting discretionary enforcement in support of grid reliability. Refer to Attachment M of PJM Manual M-13, Emergency Procedures https://www.pjm.com/-/media/documents/manuals/m13.ashx
- Consider tuning combustion and environmental controls for operation during winter ambient conditions.
- Consider issues that could adversely affect the delivery of fuel to the units such as limited fuel delivery trucks, etc.
- Consider need to contact appropriate governmental agencies to approve waivers to allow fuel truck delivery drivers to work extended hours.
- Consider adding kerosene to fuel oil as required to minimize gelling.

- Consider treating coal and limestone systems with anti-freezing solution.

Operation on Alternate Fuel

- Test fuel switching equipment and capabilities where applicable including consideration of the following:
  - Availability of alternate fuel supply.
  - Time required to switch fuels.
  - Amount of unit reduction required to switch fuels.
  - Unit capacity while on alternate fuel.
  - Operator training and experience.
  - Fuel switching equipment problems.
  - Boiler and combustion control adjustments needed to operate on alternate fuel.
  - Consider mitigation measures to alleviate derates during cold weather events due to emission limitations.
  - Inform PJM of any limitation of operating hours due to environment permits considering extended operation on alternate fuel.
  - Consider mitigating alternate fuel start-up problems by scheduling at least enough primary fuel for start-up.

Non-Fuel Consumables

- Review inventories of all commodities, equipment, and other supplies that could aid in severe winter weather event preparation/response.
- Arrange for adequate supply of demineralized water and other Generating Facility consumables considering the potential of extended operation on primary or secondary fuel during extreme cold weather and high winds.
- Arrange for adequate supply of fuel (e.g. kerosene) for portable space heaters.
- Arrange for adequate hydrogen supply considering additional losses due to hydrogen seal contraction during cold temperatures.
- Review process for ensuring adequate quantities of winter weather and personal protection equipment are available (e.g., heat lamps, heaters, etc.).
- Provide adequate inventory of parts and supplies needed for cold weather operation.
- Consider putting together emergency freeze protection kits that include all tools and equipment necessary to thaw a frozen component and then thoroughly insulate / protect component from future freezing.
- Arrange for adequate supply of demineralized water and other Generating Facility consumables considering the potential of extended operation on primary or secondary fuel during extreme cold weather and high winds.
- Arrange for adequate supply of fuel (e.g. kerosene) for portable space heaters.

- Arrange for adequate hydrogen supply considering additional losses due to hydrogen seal contraction during cold temperatures.
- Review process for ensuring adequate quantities of winter weather and personal protection equipment are available (e.g., heat lamps, heaters, etc.).
- Provide adequate inventory of parts and supplies needed for cold weather operation.
- Consider putting together emergency freeze protection kits that include all tools and equipment necessary to thaw a frozen component and then thoroughly insulate / protect component from future freezing.

Operating Parameters

- Determine if start-up times longer than currently modeled in Markets Gateway are required and update PJM dispatch and Markets Gateway if applicable.
- Determine the duration that the unit can maintain water, air, or fluid systems above freezing when offline. Have contingency plans for periods of freezing temperatures exceeding this duration.
- Provide accurate ambient temperature design operating limits for each generating unit that is included in the Generation Owners portfolio (including the accelerated cooling effect of wind), and update them as necessary. These limits should take into account all temperature-affected generator, turbine, and boiler equipment, and associated ancillary equipment and controls. Update PJM's eDART and Markets Gateway systems as appropriate.
- Ensure that heat tracing, insulation, lagging and wind breaks are designed to maintain water temperature (in those lines with standing water) at or above 40 degrees ambient temperature, taking into account the accelerated heat loss due to wind.

Staffing

- Consider enhanced staffing (24x7) during severe winter weather events.
- Arrange for lodging and meals as needed.
- Arrange for transportation as needed.
- Arrange for support and appropriate staffing from responsible entity for Generating Facility switchyard to ensure minimal substation equipment and line outages.
- Consider employing the "buddy system" during severe winter weather events to promote

N.5 Equipment Preparation - Inverter-Based Resources

Inverter bases resources that are typically not staffed, and controlled remotely must also be prepared for cold weather operations by performing on-site inspection.

Evaluation of Critical Components

The following is a list of critical components, mainly taken from NERC Generating Unit Winter Weather Readiness Guideline that should be included and evaluated in conjunction with preparation of Generating Facility for cold weather operations.

- Ensure all control cabinets are sufficiently heated to prevent freezing
- For wind turbines, ensure blade de-icing capabilities are readied and operational (if applicable.)
- Inspect and test anemometers and other weather detection devices.
- Functional wind turbine lube oil equipment within the nacelle, such as radiators, fans, heaters, and bypass valves
- Adequacy of tracking systems' lube oil for expected temperature during cold weather
- Accessibility of roads throughout the facility
- Ensure liquid-cooled inverters have freeze protection measures, such as anti-freeze or heaters, to address expected temperatures for that location
- Ensure winterization measures for battery systems are sufficient for expected cold weather conditions
- Consider snow removal and de-icing plans for facilities

N.6 Actions When Cold Weather is Forecasted

Prepare for PJM Cold Weather Advisory/Alert

- Review PJM Manual M-13, Emergency Operations and take the steps outlined in the manual including reporting of any fuel or environmental limitations and deferring maintenance activities.
- Review Generating Facility special operations instruction (just prior to or during a severe winter weather event)
- Run emergency generators immediately prior to severe winter weather events to help ensure availability.
- Where applicable, consider availability and reliability of Black Start Units during adverse weather and emergency conditions.
- Place in service critical equipment such as intake screen wash systems, cooling towers, auxiliary boilers, intake filter heaters and fuel handling equipment, such as coal and limestone conveyors where freezing weather could adversely impact operations or forced outage recovery.
- Institute operator rounds utilizing cold weather checklists to verify critical equipment is protected – i.e. pumps running, heaters operating, igniters tested, barriers in place, temperature gauges checked, etc.
- Monitor room temperatures, as required to prevent freezing of instrumentation and equipment in enclosed spaces (e.g. pump rooms).

N.7 Actions During Cold Weather

- Implement PJM Emergency Procedures as directed.
- Review PJM Manual M-13, Emergency Operations and take the steps outlined in the manual including reporting of any fuel or environmental limitations and deferring maintenance activities.
- Keep PJM up to date on all operational limitations that will or may affect Generating Facility output.
- For wind turbines, consider cycling turbines online (even if the wind turbines are not being used) to circulate oil to maintain temperature.
- Inform PJM of fuel type being used during each operating day for dual fuel units via the PJM Markets Gateway system. Ensure that up to date schedules for the alternative fuels are entered into Markets Gateway in case they are needed during the operating day.

N.8 Actions Following Cold Weather

After a severe cold weather event, Generation Owners should utilize a formal review process to determine what program elements went well and which need improvement. Identify and incorporate lessons learned within applicable procedures. Changes to the procedures and lessons learned must be communicated to the appropriate personnel prior to next cold weather season.

N.9 References

Links include numerous cold weather event postings including the and reliability guidelines for cold weather preparedness and operations

NERC/FERC Winter Storm Elliott Report: Inquiry into Bulk-Power System Operations During December 2022

NERC Reliability Guideline: Generating Unit Winter Weather Readiness - Current Industry Practices - Version 4

NERC Cold Weather Preparation and BPS Impacts and Lessons Learned

~~February 2011 Southwest event reports, various lessons learned~~

~~Extreme Winter Weather Events - Training Presentation~~

2019 FERC and NERC Staff Report: The South Central United States Cold Weather Bulk Electric System Event of January 17, 2018

Appendix A: Behind the Meter Generation Business Rules

Definition and Purpose of Behind-the-Meter Generation (BTMG)

1. The purpose of these rules is to permit market participants operating Behind-the-Meter Generation (BTMG) to receive the associated benefits. These benefits are recognized by allowing such generation to net for the purposes of calculating transmission, capacity, ancillary services, and administrative fee charges.

2. The netting rules for BTMG are set forth in the PJM Open Access Transmission Tariff ("PJM Tariff"), the Amended and Restated Operating Agreement of PJM Interconnection, L.L.C. ("Operating Agreement"), and the Reliability Assurance Agreement Among Load Serving Entities in the PJM Region ("RAA"). These documents filed with the Federal Energy Regulatory Commission will take precedence in the event of any conflict or ambiguity between these rules and the filed documents.

Eligibility for BTM Netting

3. These rules apply to BTMG used by end-use customers, municipal electric systems, electric cooperatives, and electric distribution companies to serve load. The load must be located at the same electrical location as the BTMG, such that no transmission or distribution facilities are utilized to transmit energy from the BTMG to the load. An exception to the prohibition on use of distribution facilities rule is allowed, in cases where permission to use the requisite distribution facilities has been obtained from the owner, lessee, or operator of such facilities. Such permission must be submitted in writing to PJM from the owner, lessee or operator of such distribution facilities.

4. BTMG netting is only available to entities that have Network Integration Transmission Service agreements with PJM.

5. These business rules do not supersede any elements of existing retail service agreements or standby service agreements between an entity and its Load Serving Entity or the electric distribution company (EDC) to which the associated load is connected.

BTM Netting – General Rules

6. BTMG does not include at any time, any portion of a generating unit's capacity that is designated as a Generation Capacity Resource; or in any hour, any portion of the output of such generating unit that is sold to another entity for consumption at another electrical location or into the PJM Interchange Energy Market. For more information regarding a BTMG unit designating capability as Generation Capacity Resource and/or Energy Resource, see the "Designating Capability as Generation Capacity Resource and/or Energy Resource" section below.

7. A Generation Owner shall not be eligible to receive payments, pursuant to Schedule 2 of the PJM Tariff, for reactive supply and voltage control service for the portion of a generating unit's capability that changes to BTMG status. A Generation Owner subject to this rule shall submit a FERC filing to amend its cost-based revenue requirement for supplying reactive supply and voltage control service under Schedule 2 to account for the status change to BTMG at least 90 days prior to the effective date of such a status change.

8. The need for metering for small BTMG will be treated on a case-by-case basis, depending on local operational security needs. For the purposes of this rule, small BTMG shall be individual generating units that are less than 10 MW, or multiple generating units that are collectively less than 10 MW. Generally, these units will not require metering for operational security purposes.

Rules for metering are detailed in Section 4.2 of this manual.

9. BTMG that is 10 MW or greater (or has been identified as requiring metering for operational security reasons) must have both revenue metering and telemetering for operational security purposes. Single unit small BTMG generators that collectively total more than 10 MW, may be aggregated behind the meter and metered as a single unit to meet this requirement should PJM require metering for the aggregate generation. Rules for metering are detailed Section 4.2 of this Manual. For modeling rules to fulfill this requirement, please refer to Manual 3A, Section 1.2.1.

10. BTMG will be recognized in PJM transmission and generation adequacy planning models. Load and generation will be modeled separately where practicable.

11. BTMG may be included in a Public Distribution Microgrid. A BTMG facility that has capability that is designated as a Generation Capacity Resource and/or Energy Resource may be the Public Distribution Microgrid Generator, the PJM Generating Facility that is capable of generating while both connected to and while islanded from the broader grid. The Public Distribution Microgrid business rules in Manual 14D, Appendix B apply to the Public Distribution Microgrid Generator.

Designating Capability as Generation Capacity Resource and/or Energy Resource

Process to Designate Capability and Change Status

12. If multiple generation units are located behind the meter, each unit may have capability designated as either a Generation Capacity Resource and/or Energy Resource on a whole unit specific basis or on a partial unit specific basis. In some cases, a single aggregate unit representing multiple generation units located behind the meter, may have capability designated as a Generation Capacity Resource and/or Energy Resource.

13. For a BTMG facility to be designated in whole or in part as a Generation Capacity Resource and/or Energy Resource, a Generation Project Developer must submit a New Services Request in accordance with PJM Manual M14H, New Service Requests Cycle Process.

14. A change from BTMG status to Generation Capacity Resource and/or Energy Resource status represents an increase in the MW of capability designated as a Generation Capacity Resource and/or Energy Resource. An increase in the MW of capability designated requires the Generation Project Developer to submit a New Services Request. The executed service agreement (e.g., Generation Interconnection Agreement, Interconnection Service Agreement, Wholesale Market Participation Agreement, etc.) indicates the Maximum Facility Output (MFO) of the generating unit, and, of the MFO, the MW of capability designated for capacity (i.e., Capacity Interconnection Rights) and the MW of capability designated for energy.

15. A change to BTMG status from Generation Capacity Resource and/or Energy Resource status represents a decrease in the MW of capability designated as a Generation Capacity Resource and/or Energy Resource. A decrease in the MW of capability designated as a Generation Capacity Resource requires the Capacity Market Seller to adhere to the Removal of Generation Capacity Resource Status rules in PJM Manual 18, Section 5.4.7 and OATT, Attachment DD, Section 6.6(g) for the decrease in the MW of capability designated. A decrease in the MW of capability designated as an Energy Resource requires a necessary study request per PJM Manual 14G, Section 4.5.

16. A Generation Project Developer may request to change all or a portion of a unit's capability from Generation Capacity Resource and/or Energy Resource status to BTMG status, or from BTMG status to Generation Capacity Resource and/or Energy Resource status (provided the generator has met the applicable requirements for Capacity Resource status and/or Energy Resource status). If a MW of capability is designated as Generation Capacity Resource such MW of capability is not able to net against the load at any time. Any portion of a unit that has been designated as a Generation Capacity Resource is subject to the same requirements as any other PJM Generation Capacity Resource. If a MW of capability is designated as Energy-only MW, such capability may be used to net against the load or may be used as Energy-only Resource, but cannot be used for both purposes simultaneously in real-time.

17. A change from Generation Capacity Resource and/or Energy Resource status to BTMG status requires an amendment or termination of the relevant service agreement (e.g., Generation Interconnection Agreement, Interconnection Service Agreement, Wholesale Market Participation Agreement, etc.). The service agreement is to be amended if the unit is to remain a partial BTMG unit after the status change. A partial BTMG unit is a unit that still has an amount of capability that is designated as a Generation Capacity Resource and/or Energy Resource. The service agreement is to be terminated if the unit desires to be a full BTMG unit. A full BTMG unit is a unit that has no capability that is designated as a Generation Capacity Resource and/or Energy Resource and does not participate in PJM Markets as a Generation Capacity Resource and/or Energy Resource.

18. A request to change from Generation Capacity Resource and/or Energy Resource status to BTMG status must be provided to PJM sufficiently in advance of the requested effective date of the status change to adhere to the Removal of Generation Capacity Resource Status rules in PJM Manual 18, Section 5.4.7 and OATT, Attachment DD, Section 6.6(g) and allow time for a

necessary study (if required), FERC filing(s), and any necessary resource modeling changes in PJM tools. In addition, notice of termination or request to amend the applicable service agreement must comply with the terms and conditions of such service agreement.

19. Any change to the relevant service agreement is not effective until PJM receives a final FERC Order (with a specified effective date therein) for a non-conforming agreement or until the agreement (with a specified effective date therein) is included in PJM's Electric Quarterly Report.

20. To be assured that a unit addition, revision, or deletion is included in an EMS quarterly model update that corresponds to when the change from/to BTMG status is to be effective, all technical modeling information must be submitted to PJM's Power Systems Modeling Department ~~Model Management Department~~ by the published data close deadlines posted on the Modeling User's Forum (MUF) website.~~DMS website at https://www.pjm.com/committees-and-groups/subcommittees/dms.aspx.~~

21. Because of the number of procedural requirements associated with changing to or from BTMG status, such changes shall be limited to once per year in accordance with the schedule set forth below.

Impact of Status Change to LSE Load Values

22. A Generation Capacity Resource that changes status to Non-Retail BTMG, or a new generator that reports as Non-Retail BTMG in the Capacity Exchange system will be able to net its full installed capacity value against the actual gross load for the wholesale area in the determination of an LSE's Network Service Peak Load (NSPL) for the first calendar year the BTMG status is in effect, and in the determination of an LSE's Obligation Peak Load (OPL) for the first Planning Period the BTMG status is in effect. In order to net the full installed capacity value, an LSE must request a NSPL or OPL adjustment for the wholesale area in which unit resides. The netting value for all succeeding years will be based on actual generator performance over the coincident peak hour(s) used in the determination of an LSE's Network Service Peak Load and Obligation Peak Load.

23. An LSE's request for an adjustment to Network Service Peak Load (NSPL) for the wholesale area in which the Non-Retail BTMG unit resides for the first calendar year the unit is in BTMG status must be submitted via email to PJM at rpm_hotline@pjm.com by October 31 prior to such calendar year. If the request is for a Generation Capacity Resource changing status to Non-Retail BTMG, the following criteria must be satisfied: (1) unit was in Generation Capacity Resource status during the zonal 1 CP hour and (2) the effective date of the status change must be prior to or commence with the start of the calendar year for which a NSPL adjustment is being sought. The amount of NSPL adjustment requested may not exceed the installed capacity value of Generation Capacity Resource in the Capacity Exchange system prior to the status change. If the request is for a new Non-Retail BTMG, the following criteria must be satisfied: (1) the new unit was not in-service during the zonal 1CP hour; (2) the new unit is in-service by the October 31 deadline or has a scheduled in-service date during November 1 to November 30;

and (3) an Officer Certification form attesting to the actual or scheduled in-service date of the new unit is submitted with the request. The amount of NSPL adjustment requested may not exceed the summer rated installed capacity value of the new Non-Retail BTMG unit reported in the Capacity Exchange system. The amount of NSPL adjustment requested may be capped if the LSE's resultant NSPL for the wholesale area will become negative as a result of the adjustment request. PJM will coordinate with the relevant EDC to process the LSE's NSPL adjustment request and finalize the approved amount of NSPL adjustment. The approved Network Service Peak Load adjustment will become effective the following January 1 and change shall remain in effect for a period no less than one calendar year.

24. The zonal metered peak for the 1 CP hour (zonal Network Service Peak Load) will be adjusted downward by the total amount of approved NSPL adjustments in the zone

25. An LSE's request for an adjustment to Obligation Peak Load for the wholesale area in which the Non-Retail BTMG unit resides for the first Planning Period the unit is in BTMG status must be submitted by email to PJM at rpm_hotline@pjm.com by October 31 prior to such Planning Period. If the request is for a Generation Capacity Resource changing status to Non-Retail BTMG, the following criteria must be satisfied: (1) unit was in Generation Capacity Resource status during the RTO 5CP hours and (2) the effective date of the status change must be prior to or commence with the start of the Planning Period for which a OPL adjustment is being sought. The amount of OPL adjustment requested may not exceed the installed capacity value of Generation Capacity Resource in the Capacity Exchange system prior to the status change. If the request is for a new Non-Retail BTMG, the following criteria must be satisfied; (1) the new unit's in-service date is after the RTO 5 CP hours; (2) the new unit was in-service by the October 31 deadline or has a scheduled in-service date during November 1 to November 30; and (3) an Officer Certification form attesting to the actual or scheduled in-service date of the new unit is submitted with the request. The amount of OPL adjustment requested may not exceed the summer rated installed capacity value of the new Non-Retail BTMG unit reported in the Capacity Exchange system. The amount of OPL adjustment requested may be capped if the LSE's resultant OPL will become negative as a result of the adjustment request. PJM will coordinate with the relevant EDC to process the LSE's OPL adjustment request and finalize the approved amount of OPL adjustment. The approved Obligation Peak Load adjustment will become effective the following June 1and shall remain in effect for a period no less than one Planning Period.

26. The zonal weather normalized summer peak will be adjusted downward by the total amount of approved OPL adjustments in the zone. The zonal metered peaks for each of the RTO 5 CP hours will be adjusted downward by the total amount of approved OPL adjustments in the zone.

27. EDCs that are responsible for determining LSE NSPL or OPL values shall have the ability to view data reported for Non-Retail BTMG units in their relevant zone in the Capacity Exchange system to facilitate the timely processing of NSPL and OPL adjustments for new Non-Retail BTMG units.

28. An approved adjustment to NSPL or OPL will result in the expected performance level of the Non-Retail BTMG unit for the November 1 through October 31 compliance period to be applicable once the Non-Retail BTMG status is effective. The expected performance level of the Non-Retail BTMG will be set to the approved NSPL/OPL adjustment amount.

29. The effective date of a status change from Generation Capacity Resource and/or Energy Resource status to BTMG status or from BTMG status to Generation Capacity Resource and/or Energy Resource status shall only occur on the first of a month. All resource modeling changes in PJM tools must be completed to effectuate such a status change. The real-time load reported in Inschedule and real-time generation output reported in PowerMeter shall be reported by EDC, LSE, or generation owner such that it accurately reflects the change in status to BTMG status or from BTMG status for relevant MWs of capability as of the effective date of the status change. The change to BTMG status or from BTMG status shall remain in effect for a period no less than 12 months from the month the change becomes effective.

30. Once the status change from Generation Capacity Resource and/or Energy Resource to BTMG status is effective, the generation output from the operating BTMG unit is allowed to reduce the actual gross load at a retail end-use customer site or at the wholesale area level (in the case of Non-Retail BTMG) and a net load (gross load minus operating BTMG, not to be less than zero) is able to be used in the determination of LSE's charges for energy, ancillary services, capacity, transmission, and administrative fee charges in accordance with business rule #40.

31. The timing requirements established in Rules 23, 25 and 29 are not affected by a transfer of ownership. BTMG status changes and adjustments to NSPL or OPL are only permitted in accordance with the timetable described in Rules 23, 25 and 29 above.

32. If a wholesale area is subject to a reduced netting due to Non-Retail BTMG unit(s) failure to perform in compliance events (as described in business rules #76-79), the relevant LSE's requested adjustment to the wholesale area's Network Service Peak Load or Obligation Peak Load due to a Generation Capacity Resource changing status to Non-Retail BTMG status or due to a new Non-Retail BTMG shall be reduced such that the full effect of the total netting reduction amount due to Non-Retail BTMG unit(s) failure to perform still applies.

Impact of Status Change to CIRs

33. If the entire Generation Capacity Resource changes status to BTMG the Capacity Interconnection Rights will be treated the same as if the unit had been removed from Generation Capacity Resource status. Those Capacity Interconnection Rights are defined in Section 230 of the PJM Tariff, generally, and Section 230.3.3 specifically with respect to rights that apply if a Generation Capacity Resource is removed from Generation Capacity Resource status.

Participation in Load Management Programs

34. A BTMG unit may have capability participating in all relevant PJM Load Response Programs (Pre-Emergency/Emergency and/or Economic Load Response) under the terms and conditions in effect at the time of participation in accordance with Manual 11, Energy & Ancilliary Services Market Participation, Section 10 and Manual 18, PJM Capacity Market, Section 4.3.

35. A Curtailment Service Provider indicates a BTMG unit is participating as Pre-Emergency/ Emergency and/or Economic Load Response by providing on-site generator data for a location through the registration process in DR Hub. Details regarding Economic registration process is in Manual 11, Section 10.2. Details regarding Pre-Emergency/Emergency registration process is in Manual 18, Section 4.3.5. A Pre-Emergency/Emergency Load Response registration is effective for a Delivery Year.

36. If a portion of the BTMG unit injects past the point of interconnection, the portion that injects may not participate as PJM Load Response; however, it may participate as a Generation Capacity Resource and/or Energy Resource (provided it has meet all the applicable requirements for Generation Capacity Resource and/or Energy Resource status).

37. A MW of output from the BTMG unit shall only be used for a single purpose for any interval. A MW may be used as BTMG that nets against the load as part of normal operations, may provide PJM Load Response, or may be used as a Generation Capacity Resource and/or Energy Resource. A MW of output may not be used for multiple purposes simultaneously.

38. If a BTMG unit is operated during the relevant coincident peak hours to reduce the Peak Load Contribution (PLC) for the subsequent Delivery Year, this action will reduce the unit's ability to participate as Pre-Emergency/Emergency Load Response for the subsequent Delivery Year.

Generation Netted Against Load

39. The load associated with BTMG must have a Load Serving Entity (LSE). The LSE will be responsible for supplying energy, capacity, ancillary services and transmission for that portion of the load not supplied by the BTMG. For the purposes of this rule, the load not supplied by the BTMG shall include load normally supplied by the BTMG during periods when the BTMG is not operating.

40. Since generation output from operating BTMG is allowed to reduce the actual gross load at a retail end-use customer site or at the wholesale area level (in the case of Non-Retail BTMG), a net load (gross load minus operating BTMG, not to be less than zero) is able to be used in the determination of LSE's charges for energy, ancillary services, capacity, transmission, and administrative fee charges. An operating BTMG unit is as able to net against the actual gross load; however, any MWs from the unit that are providing energy to PJM in real-time as generation resource are not permitted to net against the load in the determination of LSE's charges. An operating BTMG unit participating in Pre-Emergency/Emergency Load Response and providing load reductions to PJM may result in an add-back to the LSE's load in the

determination of a LSE's peak load contribution (i.e., obligation peak load) in accordance with PJM Manual 19, Load Forecasting and Analysis, Attachment A.

41. Under this "netting" arrangement, the EDC and/or LSE will be responsible for reporting both the load and generation information to PJM for use in the load forecast for generators for which metering is required for operational security purposes. The EDC may need to obtain this information from the LSE and both parties are required to cooperate to ensure PJM receives the information.

42. For wholesale market participation, the interconnection requirements will be publicly available and, in cases where parallel operation will exist with the distribution or transmission system, determined by the EDC in accordance with applicable state or other jurisdictional requirements. The generator will be evaluated using the PJM interconnection process only if it is involved in a wholesale transaction.

BTM Netting – Non-Retail Participation

43. Non-Retail BTMG netting provisions apply to behind the meter generation used by municipal electric systems, electric cooperatives, and EDCs to serve load, provided that, if distribution facilities are used to deliver energy from Non-Retail BTMG to load, then permission to use such distribution facilities has been obtained from the owner, lessee, or operator of such distribution facilities. Such permission to use the distribution facilities shall be confirmed when a new Non-Retail BTMG unit is reported through the submittal of a Change Request in the Capacity Exchange system. Non-Retail BTMG does not include a generation facility that is dedicated to a retail end-use program that directly offsets retail charges under regulations promulgated by a Relevant Electric Retail Regulatory Authority (e.g. Net Energy Metering, Community Solar, or Aggregate Net Energy Metering programs).

44. A Load Serving Entity (LSE) that has Non-Retail BTMG that may be used to net against a municipal electric system, electric cooperative, or EDC's wholesale area load that such LSE serves must have a Network Integration Transmission Service agreement with PJM.

45. On an annual basis in the month of June, PJM will solicit the LSE that serves the entire load of a modeled municipal electric system, electric cooperative, or EDC wholesale area in the Capacity Exchange system to report and confirm Non-Retail BTMG unit data for a wholesale area for the Delivery Year in the Capacity Exchange system. The LSE account that was assigned the entire Obligation Peak Load value on June 1 of the Delivery Year for a modeled wholesale area in Capacity Exchange is responsible for the reporting requirements of NRBTMG for such Delivery Year. Non-Retail BTMG units with nameplate capacity that are greater than or equal to 0.1 MW and are located in such modeled wholesale area shall be reported. If there are multiple LSEs that serve load in a modeled EDC wholesale area in the Zone or if there are multiple LSEs that serve load in the Rest of the Zone (i.e., Zone minus modeled wholesale areas in the Capacity Exchange system), PJM will solicit the EDC for the modeled EDC wholesale area or for the Rest of the Zone to report and confirm Non-Retail BTMG unit data applicable to the modeled EDC wholesale area or the Rest of the Zone.

46. Each solicited LSE and EDC shall respond to PJM's request by the stated deadline of the request and report and confirm Non-Retail BTMG unit data for a wholesale area in the Capacity Exchange system and provide all requested data in the Capacity Exchange system to the extent the LSE or EDC holds or after best efforts can obtain the requested data. If an LSE or EDC demonstrates to PJM that a generator agreement prior to 2005 contains confidentiality requirements that prohibit the disclosure of certain data requested the LSE or EDC shall not be required to provide such data. The stated deadline of PJM's request shall allow the LSE or EDC at least 31 days to respond. If there is a LSE or EDC account for which there is no Non-Retail BTMG located in the area for which the LSE or EDC was requested to report, the solicited LSE or EDC shall still report and confirm in the Capacity Exchange system that there is no Non-Retail BTMG located in that area.

47. The Non-Retail BTMG reporting of a missing or new Non-Retail BTMG is accomplished by submitting a Change Request in the Capacity Exchange system..

48. Each unit shall be identified separately in the Capacity Exchange system. An electric storage resource with nameplate capacity that is greater than or equal to 0.1 MW co-located with another resource type shall be identified separately in the Capacity Exchange system.

49. The summer rated installed capacity value of a unit reported or in the Capacity Exchange system shall be determined by the LSE consistent with the methodology for determining Summer Net Capability for the resource type in Manual 21B, section 2 through 2024/2025 DY and consistent with methodology for determining summer rated installed capacity in Manual 21B, Section 6 for resources other than solar or wind effective with the 2025/2026 DY. However, there is no summer or winter capability verification test requirement for Non-Retail BTMG. In the case of a new solar or wind Non-Retail BTMG unit, the summer rated installed capacity value shall be determined as the Net Maximum Capacity, the manufacturer's output rating less than station load, multiplied by the posted class average capacity factor at the time of the initial reporting or Delivery Year confirmation. For mature solar or wind Non-retail BTMG, a LSE/EDC may use actual historical performance data to determine the summer rated installed capacity value.

50. If a portion of the reported unit or the entirety of a previously reported unit has been qualified as a Generation Capacity Resource or Energy Resource, the installed capacity MWs participating in PJM Markets for the current Planning Period and expected to be participating in PJM Markets during coincident peak hours (i.e., the MWs are not expected to net against wholesale area load during coincident peak hours) shall also be reported in the Capacity Exchange system.

51. If a portion of the reported unit or the entirety of a previously reported unit is currently registered as Pre-Emergency, Emergency, or Economic Load Response and is expected to be participating in PJM Markets (i.e., the MWs are not expected to net against the wholesale area load during coincident peak hours), the LSE shall indicate in the Capacity Exchange system the installed capacity MWs participating in PJM Markets.

52. The netting capability of a unit shall be the summer rated installed capacity value minus the installed capacity MWs participating in PJM Markets.

53. Until the Change Request functionality is released in Capacity Exchange, if there is an update needed to the Non-Retail BTMG unit characteristic data in the Capacity Exchange system, the LSE/EDC shall submit a request to CapacityExchangeSupport@pjm.com to update specific unit data. The reporting of a new or deactivated unit to PJM shall occur within 31 days of the in-service or deactivation date. However, a new unit or Capacity Resource that changes status to Non-Retail BTMG shall be reported to PJM no later than October 31 in order to comply with business rules #23 through #25 if an adjustment to wholesale area's network service peak load or obligation peak load is requested for next calendar year or delivery year. For new units, the LSE/EDC must also submit to CapacityExchangeSupport@pjm.com a letter from the owner, lessee, or operator of the distribution facilities that indicates permission to use the distribution facilities to transmit energy from the Non-Retail BTMG to the wholesale area load on the distribution system has been granted.

54. PJM shall post aggregate data on the Non-Retail BTMG submitted to PJM consistent with the criteria in Manual 33, Section 3: Market Data Postings.

55. Non-Retail BTMG netting is subject to a threshold amount in the determination of network service peak loads and obligation peak loads. Non-Retail BTMG netting is not subject to a threshold amount in the determination of actual or scheduled loads used in energy, ancillary services, or administrative fee charges. The Non-Retail BTMG threshold is 1,500 MW for calendar year 2006 for network service peak loads and for the 2006/2007 Planning Period for obligation peak loads. Each year thereafter, the Non-Retail BTMG threshold will be increased based on PJM RTO load growth. PJM RTO load growth will be determined based on the most recent forecasted weather-adjusted coincident summer peak divided by the weather-adjusted coincident peak for the previous summer. After applying the load growth factor, the Non-Retail BTMG threshold will be rounded to the nearest whole MW, and that rounded number will be the Non-Retail BTMG threshold for that current calendar year or Planning Period and the base amount for calculating the Non-Retail BTMG threshold for the succeeding calendar year or Planning Period.

56. If the total amount of Non-Retail BTMG in PJM exceeds the Non-Retail BTMG threshold, the amount of operating Non-Retail BTMG eligible to net against the wholesale area load shall be prorated back to the threshold in the determination of wholesale area's network service peak load and obligation peak load. In such instance, the amount of operating Non-Retail BTMG eligible for netting in the wholesale area shall be the product of the total operating Non-Retail BTMG in such wholesale area multiplied by an adjustment ratio. The adjustment ratio is equal to the Non-Retail BTMG threshold divided by the total amount of the Non-Retail BTMG in the PJM RTO (not to exceed 3,000 MW). [Example: if the Non-Retail BTMG threshold is 1,500 and the total amount of Non-Retail BTMG netting in the PJM RTO reaches 2,000, then 75 percent of the operating Non-Retail BTMG in the wholesale area would be eligible for netting.]

57. The total amount of Non-Retail BTMG in PJM shall be calculated based on the sum of the netting capability values reported to PJM in the Capacity Exchange system.

58. PJM shall post the total amount of Non-Retail BTMG in PJM, Non-Retail BTMG threshold, and the adjustment ratio that is applicable for the calendar year/Planning Period on the PJM website no later than October 31 prior to such calendar year/Planning Period.

59. If the ratio adjustment for a calendar year/Planning Period is less than 100%, the EDC that is responsible for calculating the obligation peak load and network service peak load for the wholesale area in a transmission zone, shall apply the ratio adjustment in their procedures for calculating the wholesale area's network service peak load for the calendar year and obligation peak load for the Planning Period. In their procedures, the EDC shall reduce the total amount of operating Non-Retail BTMG in the wholesale area that is allowed to net against the wholesale area's actual load to an amount equal to the total operating Non-Retail BTMG in the wholesale area that is allowed to net times the ratio adjustment. The total operating Non-Retail BTMG in the wholesale area that is allowed to net shall be based on the total hourly generation output data for Non-Retail BTMG units in the wholesale area less any hourly generation output of such Non-Retail BTMG units participating in PJM Markets.

60. If there are multiple LSEs that serve the load in a modeled EDC wholesale area or in the Rest of the Zone, the impact of any reduced netting to the network service peak load value or the obligation peak load value that would be determined for a modeled EDC wholesale area or the Rest of the Zone as a result of the total amount of Non-Retail BTMG in PJM exceeding the Non-Retail BTMG threshold or the 3000 MW cap (as described in business rule 53) shall be allocated to the multiple LSEs that serve load in a modeled EDC wholesale area in the Zone or in the Rest of the Zone in accordance with the EDC's procedures for calculating an LSE's network service peak load or obligation peak load.

61. The LSE/EDC account that is responsible to report and confirm on NRBTMG units in a wholesale area for a Delivery Year is also responsible for submitting in November of such Delivery Year generation output data for the Non-Retail BTMG units that have a netting capability value greater than 0.1 MW, and are located in such wholesale area. The hourly generation output data for the zonal 1CP hour and RTO 5CP hours are reported in the Capacity Exchange system.

62. An EDC may request hourly generation output data for additional hours if additional hours are used in an EDC's procedures for calculating the LSE's network service peak load for the calendar year or obligation peak load for the Planning Period. An EDC's request for additional hours of generation output data must be submitted to CapacityExchangeSupport@pjm.com no later than October 15 prior to a calendar year/Planning Period.

63. PJM shall open the Coincident Peak Hours screen in the Capacity Exchange system by October 22 for the submittal of hourly generation output data for coincident peak hours applicable for prior November 1 through October 31 reporting period..

64. The hourly generation output data for the entire unit shall be reported the Coincident Peak Hours screen in Capacity Exchange. If a portion of the hourly generation output participated in a PJM Market, such portion of the hourly generation output shall also be reported.

65. The responsible LSE/EDC must submit Non-Retail BTMG generation output data for requested coincident peak hours in the Coincident Peak Hours screen in Capacity Exchange system prior to the closing of screen on November 30. If NRBTMG was required to respond to a performance compliance event for the prior November 1 through October 31 compliance period, or if the total amount of NRBTMG in PJM exceeds the NRBTMG Threshold, the output data should be submitted by November 5. Generation output data is viewable to both the responsible LSE/EDC and the EDC responsible for calculating the network service peak load and obligation peak load of the wholesale area in the zone.

66. The total amount of Non-Retail BTMG eligible for netting under the BTMG provisions is capped at 3,000 MW. If this cap is reached, no additional Non-Retail BTMG will be eligible for netting in the determination of network service peak loads and obligation peak loads. Furthermore, within six months of reaching the cap, PJM shall file with the FERC to justify either continuation of the existing BTMG rules (including any expansion of the rules to include additional MW) or any change to the rules.

67. After the 3000 MW cap is reached, a new Non-Retail BTMG unit reported to PJM is ineligible to net against a wholesale area's load in the determination of the wholesale area's network service peak load and obligation peak load. After the 3000 Mw cap is reached, PJM shall indicate on the Coincident Peak Hours screen in the Capacity Exchange system those units that are ineligible for netting. An EDC's procedures for calculating a wholesale area's network service peak load and obligation peak load must ensure that the generation output of a Non-Retail BTMG unit identified as ineligible for netting is not included in the total operating Non-Retail BTMG in the wholesale area that is allowed to net against the wholesale area actual load.

68. A Non-Retail BTMG unit that had generation output that was allowed to net against the wholesale area actual load in the determination of a wholesale area's network service peak load or obligation peak load shall be required to operate during the first ten occurrences of Maximum Generation Emergency (MGE) conditions in the zone in which the resource is located between the period of November 1 through October 31. This obligation applies to an MGE condition called for either generation or transmission emergencies. MWs from a Non-Retail BTMG unit operating in Non-Retail BTMG status during emergency events are subject to this Non-Retail BTMG operational performance requirement. MWs from a Non-Retail BTMG unit that are operating in Generation Capacity Resource and/or Energy Resource status or PJM Load Response status (Pre-Emergency/Emergency or Economic Load Response) during emergency events are subject to Non-Performance Assessment in accordance with Manual 18, Section 8.4A.

69. The emergency procedures that trigger the performance expectation to load Non-Retail BTMG are specified in PJM Manual 13. Members are informed of emergency events in PJM through the Emergency Procedures tool. Users of Emergency Procedures tool can sign up for email or text notification via their user profile to receive emergency procedure messages.

70. Once an emergency procedure triggers the performance expectation to load Non-Retail BTMG, a Non-Retail BTMG unit is requested to operate at its maximum net or gross electrical power output, subject to the equipment stress limits for the Non-Retail BTMG unit; however, the performance of a unit during an emergency event will be measured against the expected performance level of such unit.

71. The expected performance level of a Non-Retail BTMG unit for a November 1 through October 31 compliance period is the highest netting credit level realized for such unit for the prior November 1 through October 31 reporting period of generation output data, capped at the unit's netting capability value reported in the Capacity Exchange system as of October 31 prior to the start of the November 1 through October 31 compliance period. The highest netting credit level realized is the maximum hourly generation output level excluding any generation output participating in PJM Markets that was reported for such unit in the Coincident Peak Hours screen for the prior November 1 through October 31 reporting period multiplied by the ratio adjustment.

72. Based on the Non-Retail BTMG generation output data submittals submitted by the responsible LSE/EDC in the Capacity Exchange system, PJM will determine the Non-Retail BTMG units that are subject to a performance compliance evaluation for the first ten occurrences that emergency procedures trigger the requirement to load during the current compliance period of November 1 and October 31 and the expected performance level for each unit. In December, PJM will send a notification to all LSE/EDCs that have Non-Retail BTMG units when the expected performance value of a Non-Retail BTMG unit is available to be viewed through the Expected Performance screen in the Capacity Exchange system.

73. If an emergency procedure triggers the performance expectation to load Non-Retail BTMG in an emergency event area, PJM shall evaluate the performance of all Non-Retail BTMG units that are subject to a performance compliance evaluation and located in the area of the emergency event.

74. If there are any emergency event(s) in a month for which Non-Retail BTMG performance compliance is to be evaluated by PJM, an Event Hours screen in the Capacity Exchange system will open for hourly generation output data submittal no later than two business days after the conclusion of the event month.

75. LSE/EDCs that have Non-Retail BTMG units that are subject to a performance compliance evaluation for the emergency event(s) during the month shall submit hourly generation output data for emergency events in the Capacity Exchange Event Hours screen that will close to data submittal no later than 31 days after the submittal window opens; however, not later than November 5 for emergency events during the month of October.

76. For each performance compliance event Non-Retail BTMG that is subject to a performance compliance evaluation and is not on a scheduled outage but fails to operate, in whole or in part, the netting associated with that resource for purposes of determining a wholesale area's network service peak load and obligation peak load will be reduced by ten percent of the amount of megawatts the resource failed to produce. The amount of megawatts that the resource failed to produce, the unit's performance shortfall, will be the difference between its expected performance level and its megawatt average output over the period of the emergency event. [Example: if a Non-Retail BTM resource is expected to perform at an output of 100 MW during an emergency event for which performance compliance is evaluated, but only operates to a level of 75 MW, in the next year, the amount of hourly generation output from the unit that will be allowed to net against the wholesale area load will be reduced by 2.5 MW, which is the product of the following calculation:[(100 – 75) x .10]].

77. A unit's performance shortfall may be reduced by the over-performance of another Non-Retail BTMG unit associated with the same wholesale area and located in the emergency action area.

78. The Non-Retail BTMG unit's performance shortfall for a performance compliance event may be excused if the LSE/EDC can demonstrate to PJM that such unit was unable to generate at the expected performance level due to the actual wholesale area load level being served by the unit during the period of the performance compliance event and restrictions placed on the unit to prevent injections into the PJM transmission system.

79. No later than November 8, PJM shall provide to the impacted EDCs a list of Non-Retail BTMG units by LSE/EDC account that failed to perform during performance compliance events for the prior November 1 through October 31 compliance period and each unit's total netting reduction amount due to the unit's failure to perform for the period. Such information will be provided in the Event Performance screen of the Capacity Exchange system, and is visible to EDC and impacted LSE. The EDC's procedures for calculating a wholesale area's network service peak load and obligation peak load shall ensure that the total operating Non-Retail BTMG that is allowed to net against the wholesale area's actual load during the relevant hours is reduced by the sum of the total netting reduction amounts of all Non-Retail BTMG units located in the wholesale area that failed to perform; however such reduction shall not exceed the total amount of NRBTMG that operated during the relevant coincident peak hours. Any reductions in netting will be applied in the succeeding calendar year with regard to network service peak load and the succeeding Planning Period with regard to obligation peak load. The responsible LSE/EDC and the EDC that is responsible for calculating a wholesale area's network service peak load and obligation peak load will be able to view the total netting reduction amount for the wholesale area due to all performance compliance events for a November 1 through October 31 compliance period through the Netting Reduction screen in the Capacity Exchange system.

80. If there are multiple LSEs that serve the load in a modeled EDC wholesale area or in the Rest of the Zone, the impact of any netting reduction amount to the network service peak load

value or obligation peak load value that would be determined for the modeled EDC wholesale area or the Rest of the Zone as a result of Non-Retail BTMG units in the modeled EDC wholesale area or in the Rest of the Zone that fail to perform during performance compliance events shall be allocated to the multiple LSEs that serve load in a modeled EDC wholesale area in the Zone or in the Rest of the Zone in accordance with the EDC's procedures for calculating an LSE's network service peak load or obligation peak load.

81. The impact of any netting reduction penalty amount to a wholesale area's Network Service Peak Load for the subsequent calendar year or Obligation Peak Load for subsequent Planning Period, as a result of Non-Retail BTMG unit(s) failure to perform, remains in effect for the subsequent calendar year/Planning Period regardless if a Non-Retail BTMG unit in the wholesale area changes to Generation Capacity Resource status at a point in time during such calendar year/Planning Period.

82. Non-Retail BTMG may not schedule a unit outage in the months from June through September.

83. The LSE/EDC that is responsible to report and confirm on NRBTMG units in a wholesale area for a Delivery Year is also responsible for reporting a scheduled outage during such Delivery Year of a Non-Retail BTMG unit that has a netting capability value greater than 0.1 MW to PJM through the Outage Screen in the Capacity Exchange System as soon as the LSE/EDC becomes aware of the scheduled outage on the unit. The LSE/EDC shall identify the unit, outage start date/time, expected outage stop date/time, and the outage MWs. Only those scheduled outages during the period of October through May and reported to PJM in advance of a performance compliance event will excuse the unit from the failure to perform during a performance compliance event.

PJM shall post aggregate Non-Retail BTMG data on the highest netting levels realized, the expected performance levels, and the generation output levels provided during an emergency event consistent with the criteria in Manual 33, Section 3: Market Data Postings.

Transmission Owner BTMG Reporting and Communication Process

84. PJM will maintain a list of municipal electric systems, electric cooperatives and electric distribution companies by transmission zone which will be verified by Transmission Owners on an annual basis.

85. PJM will provide each Transmission Owner with a list of BTMG facilities greater than 1 MW located within the relevant transmission zone, delineated by municipal electric system, electric cooperative and/or electric distribution company as determined by PJM's examination of EIA forms or other available public information. To the extent that the Transmission Owner holds or after reasonable efforts can obtain information, the Transmission Owner will then provide PJM the necessary information, defined below in this section, to determine the impact of BTMG during a manual load dump event or other emergency situations on an annual basis. Municipal electric system, electric cooperative and/or electric distribution company will coordinate with

Transmission Owner to provide the necessary information, defined below in this section, for BTMG located in their area upon request by the Transmission Owner.[12] If the Transmission Owner is unable after reasonable diligence to provide the information defined below in this section, the Transmission Owner will inform PJM. PJM will include the Transmission Owner verified BTMG information in the Post Contingency Local Load Relief Warning ("PCLLRW") tool or other tool as applicable.

86. To the extent that the Transmission Owner holds or after reasonable efforts can obtain information, Transmission Owner may provide additional or updated information for BTMG facilities (i.e., contact information, typical operational mode, start up time, etc.) on the list or add BTMG facilities to the list as appropriate. Transmission Owner may also review and update the BTMG information more frequently than on an annual basis. PJM will maintain confidentiality of all information provided by Transmission Owner and will only release such information under conditions governed by Operating Agreement, section 18.17.

87. Transmission Owner may coordinate with BTMG facility interconnected to the transmission system, or through the relevant electric distribution utility, during expected prolonged emergency load dump/shed or as otherwise necessary to help mitigate a grid emergency. As BTMG facilities do not participate in the wholesale energy market, any request to operate for the purpose of helping to mitigate a wholesale market issue is on a voluntary basis at the discretion of the BTMG owner. Any request to operate to mitigate a wholesale market issue will be communicated to the BTMG as a voluntary request at the discretion of the BTMG owner.

[12] If a Municipal electric system, electric cooperative, electric distribution company or affiliated transmission company is not a PJM member, and such company does not cooperate with the Transmission Owner's request to provide the information described above, the Transmission Owner will provide such information to the extent it is reasonably available.

Appendix B: Public Distribution Microgrid Business Rules

Definitions

A Microgrid is a pre-determined set of generators and load that can operate both while connected to and while islanded (i.e., isolated) from the broader grid. A Microgrid must include load, one or more generators, one or more switches for isolating and connecting to the broader grid, and a microgrid controller.

A Microgrid shall be considered a Public Distribution Microgrid ("PDM") if it includes a PJM Generating Facility that is capable of generating while both connected to and while islanded from the broader grid, and which also includes utility distribution facilities. A Microgrid is not considered a Public Distribution Microgrid if the energized portion of the islanded Microgrid includes any NERC Bulk Electric System facilities or any PJM Transmission Facilities. The relevant Public Distribution Microgrid Operator, as defined below, establishes the Public Distribution Microgrid and defines the set of Generating Facilities, distribution facilities, and load that comprise it.

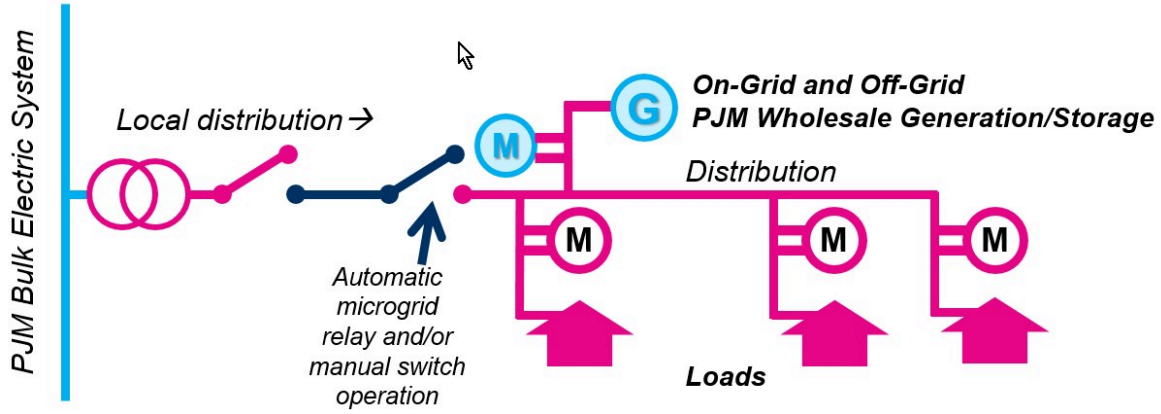

Public Distribution Microgrid Operator shall mean: (1) an Electric Distributor that controls a Public Distribution Microgrid, (2) a Member that an Electric Distributor has designated to control a Public Distribution Microgrid on an Electric Distributor's behalf, or (3) a generation and transmission cooperative or a joint municipal agency that is an Electric Distributor and that has a member that controls a Public Distribution Microgrid. Control of a Public Distribution Microgrid means control of switchgear, relays, microgrid controller and other equipment required to island generation and load in a Public Distribution Microgrid. A PDM Operator shall obtain mutual consent from all affected Electric Distributors and the applicable fully metered Electric Distribution Company regarding whether or not the PDM load is reported to PJM as wholesale load when the PDM is islanded.

Public Distribution Microgrid Generator is any share of a generator in a Public Distribution Microgrid that is a Generating Facility and that is capable of generating while both connected to and while islanded from the broader grid.

Telemetry

A Public Distribution Microgrid Operator shall ensure that the Public Distribution Microgrid Generator has access to the islanded status of the Public Distribution Microgrid.

A Public Distribution Microgrid Generator shall meet existing telemetry requirements for all PJM generators as specified in Manual 1: Control Center Requirements and Section 4.2.2 of Manual 14-D, Generator Operational Requirements. In addition, in order for PJM to know whether the Public Distribution Microgrid Generator is islanded or not, it shall provide its real-time islanded status to PJM.

Operations

For planned Public Distribution Microgrids, the Public Distribution Microgrid Operator shall, in accordance with PJM Operating Agreement Section 11.3.3, provide PJM, the Transmission Owner, and the distribution utility (if applicable) with the relevant details of the operation of the mechanism(s) that are part of the microgrid control scheme that island and reconnect the Public Distribution Microgrid, such as criteria for automatic disconnection and reconnection.

A Public Distribution Microgrid Generator shall notify PJM of the start and end of planned and actual islanded conditions as soon as practicable. To facilitate this notification, the Public Distribution Microgrid Operator shall provide all necessary information to the Public Distribution Microgrid Generator operator on an ongoing basis. Such coordination is not required in the event that PJM requests that the Public Distribution Microgrid Generator run to support an islanding event related to NERC Bulk Electric System facilities or PJM Transmission Facilities. The Public Distribution Microgrid Generator shall meet all other existing notification requirements.

Reporting

When islanded, the Public Distribution Microgrid Generator should report a full outage in eDART. In GADS, if a Public Distribution Microgrid Generator's full ICAP MW is physically available and is only constrained because it is in island mode, no unplanned outage needs to be reported and the Microgrid Generator can be listed as fully available.

If the islanded Public Distribution Microgrid Generator is limited to less than its committed ICAP MW while serving load, due to reasons other than being constrained by the total load in the island, an unplanned outage should be reported in GADS.

The applicable fully metered Electric Distribution Company and the affected Electric Distributor(s) shall coordinate with the Public Distribution Microgrid Operator to determine whether the load is reported to PJM as wholesale load when the PDM is islanded.

If the PDM load is reported to PJM as wholesale load when the PDM is islanded:

- The applicable fully metered Electric Distribution Company should expect the PDM Generators to submit their islanded output as PJM supply. In this case, the islanded PDM Generators serve PJM load when islanded.
- To the extent the islanded PDM Generator is constrained in its output due to the islanded state, PJM will use reporting on islanding status to calculate a corresponding EFORd impact based on any reductions relative to committed ICAP MW due to reasons other than PJM dispatch or constraints on PJM Transmission Facilities.

If the PDM load is not reported to PJM as wholesale load when the PDM is islanded:

- Any islanded PDM Generators should also not report their output as PJM supply. In this case, the islanded PDM Generators do not serve PJM load when islanded.
- PJM will use reporting on islanding status to calculate an EFORd for such Public Distribution Microgrid Generators consistent with them being unavailable to serve PJM load when islanded.

Appendix C: Voluntary Guidelines on Public Distribution Microgrid Operations

A Public Distribution Microgrid Operator should not "economically island”. The only reasons the Public Distribution Microgrid Operator should island include:

1. An emergency situation on the distribution and/or transmission system, or local or system-wide blackout;

2. An emergency situation on the transmission system, as defined by PJM Manual 13: Emergency Procedures, in which load shedding action is directed by PJM

3. Emergency declaration by appropriate local, state, or federal authority

4. Testing

5. Distribution facility maintenance

After islanding, a Public Distribution Microgrid Operator should reconnect the Public Distribution Microgrid as soon as reasonably possible.

Revision History

Revision 71 (07/28/2026):

- Compliance revisions to 7.1.2 Voltage and Reactive Control:
  - Added reference for gens to follow default voltage schedules if not on a specific schedule designated by the TO and PJM
  - Adjusted the MVA and Voltage threshold for gens to follow voltage schedules per the newly created NERC Category 2 GO/GOP for mid-sized IBRs to follow NERC reliability rules
  - Clarified that the only acceptable AVR mode is Voltage Control Mode, without documented and approved exception
  - Added Volt-Var Reactive Control Assessment Graph
  - Added Reactive Control Range by MW Output Graph
  - Added Enforcement section
- Attachment D: PJM Generating Unit Reactive Capability Curve Specification and Reporting Procedures:
  - Added further details to the definition of "Maximum AVR capable MW Output"
  - Added a new required parameter, "Unit Minimum MW Output with Reactive Control"

Administrative Change (Approved by Michael Zhang 02/05/2026):

- Fixed missing Revision 69 changes from Sections 9.1 and 9.3

Revision 70 (12/17/2025):

- Cover to Cover Periodic Review
  - Section 4.1.1: EMS Communications for Real-Time Data Exchange
    - Added information detailing how Voting Members will receive one PJMnet connection and can request up to five PJMnet connections which was inadvertently deleted
    - Adjusted Exhibit 2 to reflect the correct aggregate generator thresholds for metering installation criteria
    - Adjusted Exhibit 3 to reflect the correct aggregate generator thresholds for equipment types for data exchange
  - Section 4.1.4: PJM EMS Communication Protocols
    - Added section detailing EMS communication protocols adhering to the ICCP standard which was inadvertently deleted

- Section 7.3.5 Fuel, Emissions and Operational Data Reporting
  - Added start-up issues to the list of resource limitations Generation Owners must update during a Cold Weather Advisory to align with M13 section 3.1.1 and NERC TOP-002-5
- Section 7.3.6 Generation Owner Periodic Tasks and Data Submittals
  - Updated the guideline: Generation Owner Periodic Tasks and Data Submittals
  - Clarified guideline does not modify any legal or regulatory obligations for Generator Owners
- Section 13.1 Mixed Technology Facility Requirements
  - Removed retired reference to Manual 21A
- Attachment E: PJM Generator and Synchronous Condenser Reactive Capability Testing
  - Removed references to retired Manual 21 and Compliance Bulletin CB023
  - Clarified expectation for variable resources to perform reactive tests during high output periods
- Appendix A: Behind the Meter Generation Business Rules
  - Changed reference to Manual 21B from retired Manual 21

Revision 69 (12/17/2025):

- Section 9.1: Generator Deactivation Process
  - Updated Section 9.1 to reflect a 12 month deactivation notification period
- Section 9.3: Transparency into Estimated Generation Deactivation Charges
  - Added new section to address transparency in estimated generation deactivation charges

Revision 68 (07/23/2025):

- Section 4.2 Account Metering
- Exhibit 7 generalized to include all resource types for Mixed Technology Facilities and Hybrid Resources
- Section 8.2.4 Generator Outage Reporting (Aggregate Turbine availability)
  - Updated language to emphasize wind outage reporting for all types of hybrids that include wind as a technology type
- Section 12.2.4 Generator Outage Reporting Section
  - Updated language to emphasize solar outage reporting for all types of hybrids that include solar as a technology type
- Section 13.1 Marketing and Classification of Mixed Technology Facilities
  - Modified language to broaden eligibility to participate as a Hybrid Resource

  - Clarified classifications of open-loop and closed-loop based on definition changes
  - Updated language and diagram to be inclusive of all eligible resource types for hybrids
  - Updated language to specify when a Mixed Technology Facility has to participate as a Hybrid Resource
  - Noted classification of closed-loop for any Hybrid Resource without storage component
  - Clarified that for all Mixed Technology Facilities participation change notifications must be made no later than six (6) months in advance of its initial start in the energy markets
- Attachment D PJM Generating Unit Reactive Capability Curve Specification and Reporting Procedures
  - Data Requirements
  - Point 10 and Point 11 removed limiting language of inverter-based and non-inverter-based resources
  - Point 12 clarified language to only refer to Hybrid Resources with storage component
- Attachment E PJM Generator and Synchronous Condenser Reactive Capability Testing
  - Testing Requirements Summary
  - Updated table to specify testing requirements specific to Hybrid Resources with a storage component

Revision 67 (03/19/2025):

- Section 7.6 Generation Operational Testing
  - Conforming changes to align with Generation Operational Test language in OATT Attachment DD due to CIFP-RA filing ER24-99
  - Generation Operation Tests can begin starting June 1, 2025

Revision 66 (12/18/2024):

- Cover to cover Periodic Review
- References
  - Added reference to PJM Manual for Rules and Procedures for Determination of Generating Capability (M-21B)
- Section 4.3.4 Data Exchange and Management Requirements
  - Updated communication protocol for registering Phasor Measurement Units (PMU)
- Section 6.3.4 Other Requirements
  - Clarified requirement for all Generating Facilities to provide reactive capability curves to PJM prior to commercial operation

  - Clarified requirement for applicable Generating Facilities to complete reactive testing no later than 90 days after commercial operations
- Section 7.3.6 Generation Owner Periodic Tasks and Data Submittals
  - Updated the guideline: Generation Owner Periodic Tasks and Data Submittals
- Section 8 Wind Farm Requirements
  - Removed specific references to wind speed and wind direction to generalize to other meteorological parameters
- Section 8.2.1 Data Requirements for Wind Forecast Set Up
  - Updated wind forecast data requirements to apply to wind farms that are rebuilt/ repowered
- Section 8.3.3 Real-time Operating Reserve Settlement
  - Updated language to reflect the wind backcast usage in settlements as well as the applicability of hybrid resources
- Section 9.1.1 Generator Deactivation Notice
  - Updated information that may be posted publicly
- Section 10.1 Black Start Selection Process
  - Added note to enhance awareness that Black Start information is CEII and Member Confidential
- Section 11.1 Generator Data Confidentiality Procedures
  - Added language specifically naming cold weather operating limits in generator parameter data sharing procedures
- Section 12.3.3 Real-time Operating Reserve Settlement
  - Added new subsection with language to reflect the solar backcast usage in settlements as well as the applicability to hybrid resources
- Section 13.1 Marketing and Classification of Mixed Technology Facilities
  - Add reference to Manual 21B, Section 2.6
- Attachment D: PJM Generating Unit Reactive Capability Curve Specification and Reporting Procedures
  - Clarified requirements and process for submitting and updating reactive capability
  - Removed reference to AVR status since it is already covered in Section 7: Generator Operations
  - Clarified requirements for wind farms that are rebuilt/repowered to submit reactive capability curves within 6 months of rebuild/repower
- Attachment E, PJM Generator and Synchronous Condenser Reactive Capability Testing, Section E.2
  - Added reference to PJM Manual, 21B - Rules and Procedures for Determination of Generating Capability

    - Clarified requirements for wind farms that are rebuilt/repowered to submit a reactive test within 6 months of commercial operation, even if a reactive test was completed within the last 66 months
- Attachment "N" Cold Weather Preparation Guidelines and Checklist
    - Reformatted and reordered content into additional sections and sub-sections to increase readability
    - Replaced references to "generator" with either generation resource or Generating Facility where applicable
    - Added the following language taken from NERC Generating Unit Winter Weather Readiness Guideline:
        - Incorporated bulleted list of critical components, grouped by conventional generation and inverter based generation
        - Added section covering Management Roles and Expectations
        - Added section focused on Evaluation of Potential Problem Areas with Critical Components
    - References section updated to reflect latest industry best practices and lessons learned
    - Added footnote with link to NOAA map of locational first frost date
- Appendix A: Behind the Meter Generation Business Rules
    - Revised to reflect current business practices
- Corrected typos and references throughout

Revision 65 (12/20/2023):

- 4.2.2 Metering Plan
    - Added missing information for Wind Farms
- Section 8: Wind Farm Requirements
    - Added reference to solar resources
- 8.1 EMS Data Exchange
    - Remove reference to the "curtailment indicator"
- 12 Solar Park Requirements
    - Added reference to updated Attachment L and M
- 12.2.2 Real Time Output
    - Added reference to Attachment M
- Attachment L: Jointly Owned Resource Communication Model
    - Updated to include solar resources
    - Removed reference to the "curtailment indicator"
    - Added reference to respond to SCED basepoint

- Attachment M: Wind and Solar Unit Dispatchability
  - Changed title and added details to include solar resources
  - Removed references to curtailment flag
  - Section 2: Updated guidance for updating parameter limits for wind and solar

Revision 64 (11/15/2023):

- Periodic Review
- Definitions and Applicability
  - Replaced definitions with reference to the PJM Governing Agreements
- References
  - Added reference to new manual M14-H: New Service Requests Cycle Process
- Section 1.1 Generator Interconnection Process: Markets and Operations Phase
  - Modified language to include references to Generation Interconnection Agreement (GIA)
  - Replaced references to eRPM with Capacity Exchange
- Section 1.2 Generator Commercial Naming Convention
  - Updated referenced agreement name from ISA to GIA
- Section 2.1 Generation Owners' Responsibilities
  - Added reference to Manual 14C Section 1.6.1 for definition of "commercial operation"
- Section 2.2 Transfers of a Generation Facility and Name Changes of Generation Owners and Project Developers
  - Updated Interconnection Customer terminology to Project Developer
- Section 2.2.2 Generation Owner or Project Developer Name and/or contact information Changes
  - Updated Interconnection Customer terminology to Project Developer
  - Updated PJM Contact Information
- Section 3.2.4 Control Center Staffing Requirements
  - Removed language " As a general guideline" from first sentence of paragraph
- Section 4.3.4 Data Exchange and Management Requirements
  - Removed reference to Phasor Data Quality Task Force which has been sunset.
  - Added reference to OATT for guidance
- Section 5.1.3 PJM Reserve Markets
  - Modified description of PJM Reserve Market to align with Tariff defined terms.
- Section 5.4.2 The Day-ahead Energy Market
  - Updated title of section by adding the word "Energy"

  - Added "Energy" between "Day-ahead" and "Market" wherever "Day-Ahead Market appears in this section
- Section 5.7.2.8
  - Updated language to reflect updated Section 3.3 title
- Section 6.3.3 Test Energy
  - Added GIA to final agreement list
- Section 7.1.2 Voltage and Reactive Control
  - Updated terminology for New Service Request
  - Added VoltageSchedules@pjm.com for questions regarding voltage schedules.
- Section 7.3: Critical Information and Reporting Requirements
  - Clarified notification by phone to PJM dispatch
- Section 7.3.6: Periodic Task Document Periodic Review
  - Updated document as part of periodic review
- Section 7.5.2 Generation Resource Preparation and Cold Weather Checklist
  - Clarified requirement for all generation resources to prepare resources for cold weather operation
- Section 13.1 Marketing and Classification of Mixed Technology Facilities
  - Updated terminology to reference GIA
- Section 13.2: Other Requirements
  - Removed reference to Section 4.1.7
- Attachment A: New Generator Checklist
  - Replaced references to eRPM with Capacity Exchange
- Attachment D: PJM Generating Unit Reactive Capability Curve Specification and Reporting Procedures
  - Clarified that the 95 degree temperature applies to thermal resources
  - Added ReactiveTesting@pjm.com for questions regarding reactive capability
- Attachment E: PJM Generator and Synchronous Condenser Reactive Capability Testing
  - Added ReactiveTesting@pjm.com for questions regarding reactive testing
  - Reformatted table of reactive testing requirements for readability
- Attachment N: Cold Weather Checklist
  - Added additional winter preparation guidance for combustion turbine intake preparation based on NERC Lessons Learned
  - Add additional guidance applicable to inverter-based resources
  - Added other best practices based on industry events

- Appendix A: Behind the Meter Generation Business Rules
  - Clarified reference wording for metering requirements
  - Removed statement requiring BTMG generation to modeled in the PJM EMS in order for telemetry and metering to be communicated to PJM
  - Removed outdated reference to Manual 3A, Appendix D
  - Modified instances of Interconnection Customer to Project Developer
  - Included references to GIA in final agreements
  - Updated reference from M14A/M14G to new M14H

Revision 63 (11/10/2023)

- Section 7.1.6:
  - Added requirements for Fuel Assured Black Start Unit to notify PJM if their fuel inventory falls below 16 hours
- Section 10.1.1:
  - Added Fuel Assured Black Start Units to those included in Black Start RFP
  - Added fuel assurance needs to RFP technical requirements development
  - Added eligibility provisions for existing Black Start Units, new Black Start Resources in the Generation Interconnection Queue, and existing units requiring upgrades to provide Black Start Service and Fuel Assured Black Start Service for submission of RFP proposals
  - Added fuel assurance to RFP proposal evaluation criteria
  - Added selection provisions for Black Start Units on the Base Formula Rate that meet the fuel assurance criteria without requiring additional capital costs
  - Added reference to M36 fuel assurance zonal minimum and incremental increase in restoration time to Fuel Assurance section of RFP proposal evaluation
  - Added fuel assurance to review criteria for selection process review with TOs
- Section 10.2 Black Start Incremental RFP Process
  - Added Fuel Assured Black Start Unit owner and fuel assurance criteria to "triggering events" process
- Section 10.2.3 Implication for Terminating Black Start Units
  - Added Fuel Assured Black Start Units to Black Start Units which need to be replaced if a Black Start Unit is terminating
- Section 10.3.1 Reliability Backstop Process Step 1
  - Added failure to meet Black Start fuel assurance criteria to Reliability Backstop trigger provisions
- Section 10.3.2 Reliability Backstop Process Step 2

  - Added failure to meet black start fuel assurance criteria to the Reliability Backstop Process for PJM, TO and affected State(s)
- Section 10.3.3 Reliability Backstop Process Step 3
  - Added Fuel Assured Black Start Unit to Reliability Backstop requirement for proposed unit to be used solely for black start purposes only
- 10.3.4 Reliability Backstop Process Step 4
  - Added Fuel Assured Black Start generation acquired in Reliability Backstop RFP must adhere to Fuel Assured Black Start testing and performance requirements

Administrative Change (Approved by Dave Anders 05/18/2023) Published 06/01/2023:

- Corrected outdated Exhibit 11 Image for Generation Deactivation Process Flow

Revision 62 (12/21/2022):

- Periodic Cover-to-Cover Review
- Section 2.1 Generation Owner Responsibilities
  - Added clarification for the requirement to complete eDART GO Contact Survey
- Section 3 Control Center Requirements
  - Aligned language with Manual 1: Control Center Requirements for consistency
  - Removed language that is duplicative with Manual 1 and referenced M-1 where appropriate
- Section 3.2.4 Control Center Staffing Requirements
  - Added reference to M-1: Attachment F: Overview and Requirements for Remote Operations of Market Operations Centers due to Exceptional Circumstances
- Section 4 Data Exchange and Metering Requirements
  - Section 4.1 – Renamed from Computer System Data Exchange to EMS Data Exchange
  - Aligned language with Manual 1: Control Center Requirements for consistency
  - Removed language that is duplicative with Manual 1 and referenced M-1 where appropriate
- Section 5.1.3 PJM Reserve Markets
  - Updated language to reflect changes related to Energy Price Formation filing that were effective on 10/1/22
- Section 5.4.2 The Day-Ahead Market
  - Updated language to reflect changes related to Energy Price Formation filing that were effective on 10/1/22
- Section 5.4.4 Grid Accounting
  - Removed duplicative language and replaced with references to appropriate settlements and accounting manuals

- Section 7.1.1 Generator Real-Power Control
  - Clarified the expectation that Generating Facilities are expected to follow economic basepoint unless operating as non-dispatchable
- Section 7.3.1 Planned Outage
  - Clarified requirement for TO approval of outages for Black Start Units
- Section 7.3.2 Maintenance Outage
  - Clarified requirement for TO approval of outages for Black Start Units
- Section 7.3.3 Unplanned Outage
  - Clarified expected time for submitting an Unplanned Outage ticket
- Section 8.1 – Renamed from Computer System Data Exchange to EMS Data Exchange
- Section 10.1.1: Black Start Selection - Frequency
  - Added reference to PJM's obligation to perform black start studies every 5 years and clarified expectations for resources currently providing Black Start Service
- Various spelling and grammatical changes throughout
  - Capitalized Black Start Units and Black Start Service for consistency with PJM governing documents
  - Replaced references to voice communications with interpersonal communications to align with NERC Standard COM-001.
- Section 12.1 – Renamed from Computer System Data Exchange to EMS Data Exchange
- Attachment "N": Cold Weather Preparation Guideline and Checklist
  - Removed outdated link to RF Winterization Guideline
- Manual ownership changed from David Schweizer to Michael Zhang

Revision 61 (10/01/2022)

Section 7.3.5: Fuel, Emissions and Operational Data Reporting

- Seasonal Fuel and Emissions Reporting
  - Added Generating Facility minimum design temperature annual verification
- Real Time Reporting
  - Added reference to new Emergency Procedure: “Cold Weather Advisory”
  - Added requirement for Generation Owners to enter/review/update Generating Facility cold weather operating limit temperature in eDART / Markets Gateway

Attachment N: Cold Weather Preparation Guideline and Checklist

- Added recommendation to take into account the effects of precipitation and wind during cold weather preparation.

Revision 60 (10/01/2022):

- **Section 4.1.7 – SCADA**
  - Clarify required telemetry values for Hybrid Resources.
- **Section 4.2.3 Metering for Individual Generators**
  - Specify what and where settlement and telemetry meters are required for Mixed Technology Facilities.
- **Section 7.1.2 Voltage and Reactive Control**
  - How to aggregate units at a Mixed Technology Facility for purposes of size thresholds for applicability of voltage schedules.
- **Section 7.3 eDART reporting**
  - How Hybrid Resources must submit outage information
- **Section 8.3.3 LOC rule clarification**
- **Section 12.2.4 outage reporting clarification**
- **Add a new Section 13 for Mixed Tech Facilities**
  - Including definitional concepts, classification rules, and applicability of other rules.
- **Attachment D – Reactive Capability**
  - Specify what D-curves will look like for Mixed Technology Facilities.
- **Attachment E – Reactive Tests**
  - Specify how to do reactive testing at Mixed Technology Facilities
- **Attachment L – Jointly Owned Resource Communication Model**
  - Single MOC for the Mixed Technology Facility components.

Revision 59 (09/11/2022):

- Section 9.1: PJM will study deactivations four times per year (quarterly) for all Deactivation Notices received prior to the study commencement date; and deactivation notifications only require good faith estimates for a time period if the Generation Owner, or designated agent, requests to mothball. PJM Deactivation Study period commencements will be January 1, April 1, July 1, and October 1. Reliability Notifications will be made by end of February, May, August, and September respectively.

Revision 58 (12/15/2021):

Periodic cover-to-cover review

Section 1.2 Generator Commercial Naming Convention

- Clarified and provided additional guidance on acceptable Generating Facility naming

Section 2.3 Generator Market Remodel

- Added new section under the Responsibilities of Generation Owners section to detail the generator market remodel process.

Section 2.4 eDART Modeling

- Added new section under the Responsibilities of Generation Owners section to describe eDART modeling requirements previously covered in section 5.3.4 eDART.

Section 3.3 Voice Communication Requirements for Generating Entities

- Removed references to ring-down phone lines to generating entities

Section 5.3.3 PJM eRPM

- Renamed to PJM Capacity Exchange and removed references to eRPM

Section 5.3.4 eDART

- Removed the last two paragraphs from this section and moved it to the new section 2.4 eDART Modeling.

Section 5.4.4 Grid Accounting

- Replaced references to eRPM with Capacity Exchange

Section 5.7.2.7 eRPM account

- Renamed to Capacity Exchange account

Section 5.7.3 Process Timeline

- Corrected the duration of attaining PJM membership after all required paperwork has been signed and received by PJM from 60 to 90 days.

Section 7.3.1 Planned Outage

- Clarified that eDART tool is used for submitting Planned Outages

Section 7.3.2 Maintenance Outage

- Clarified applicability to all generation resources

Section 7.3.5 Fuel and Emissions Reporting

- Renamed section to Fuel Emissions and Operational Data Reporting
- Clarified requirements and necessity for responding to PJM data requests

Section 7.3.6 Generation Owner Periodic Tasks and Data Submittals

- Added new section with guidelines to assist Generation Owners tracking periodic tasks, testing and data submittals.

Section 8.2.1 Data Requirements for Wind Forecast Set Up

- Clarified language, including title of section, to indicate that data is required for forecasting when there is a change to a wind farm in addition to when a wind farm first comes online

Section 8.2.3 Real Time Meteorological Tower (or mutually agreed upon alternative source)

- Modified format of temperature unit in table to be consistent with other parameters

Section 8.2.6 Wind Power Forecast

- Modified names and descriptions of types of forecasts to reflect the manner in which PJM currently uses forecast products

Section 8.3 Forecast Data Usage

- Aligned names and descriptions of types of forecasts with changes made in 8.2.6

Section 9.1.1 Generator Deactivation Request

- Renamed to Generator Deactivation Notice
- Updated Black Start resource termination requirements to reflect current Tariff requirements
- Updated language to be consistent with current business practice

Section 9.1.2 Initial Analysis

- Renamed to Deactivation Analysis
- Updated language to be consistent with current business practice

Section 9.1.3 Analysis Results

- Updated language to be consistent with current business practice and to reflect current Tariff requirements
- Updated Black Start resource termination revenue impacts to reflect current Tariff requirements

Section 12.2.1 Data Requirements for Solar Forecast Set Up

- Clarified language, including title of section, to indicate that data is required for forecasting when there is a change to a solar park in addition to when a solar park first comes online
- Added language stating that solar parks with multiple components (e.g. multiple panel models) need to provide data for each component
- Modified list to separate Maximum Facility Output (MW) from AC installed capacity of each component (MW)

Section 12.2.2 Real Time Output

- Added clarifying language regarding criteria that require real-time output telemetry

- Expanded requirements for hybrids and collocated resources to apply to all combinations of solar and other resources in addition to solar and storage resources

Section 12.2.3 Real Time Meteorological Tower (or mutually agreed upon alternative source)

- Clarified that type of real-time irradiance data required is Plane of Array (POA) irradiance
- Modified format of temperature unit in table to be consistent with other parameters

Section 12.2.5 Solar Power Forecast

- Modified names and descriptions of types of forecasts to reflect the manner in which PJM currently uses forecast products

Section 12.3 Forecast Data Usage

- Aligned names and descriptions of types of forecasts with changes made in 12.2.5

Attachment N: Cold Weather Preparation Guideline and Checklist

- Update existing links and added links to additional industry guidance for generation resource cold weather preparation
- Added recommendation to create “Emergency Freeze Protection Kits” at various plant locations

Revision 57 (10/20/2021):

- Appendix A, Behind the Meter Generation Business Rules
  - Documented the processes related to designating capability as Generation Capacity Resource and/or Energy Resource
  - Clarified options for BTMG to participate in PJM Load Response and process to indicate a Behind the Meter Generation unit is participating in PJM Load Response
  - Clarified the load impacts due to Behind the Meter Generation status changes
  - Clarified the performance obligation impacts due to Behind the Meter Generation status changes
  - Administrative updates – added section headings and corrected references to business rule numbers

Revision 56 (06/06/2021):

- Section 9.1.1
  - Clarified Black Start Service termination notification requirements
- Section 10.1.1
  - Updated requirements for responding to Black Start RFP, applicable rates and commitment period.

Revision 55 (05/26/2021):

- Added new Appendix B: Public Distribution Microgrid Business Rules
- Added new Appendix C: Voluntary Guideline on Public Distribution Microgrid Operations
- Section 4.2.2: Added telemetry requirement for Public Distribution Microgrid Generators

Revision 54 (04/21/2021):

- Section 5.3.7 Resource Tracker
  - Changed Market Participants are requested to Generator Owner, or designated agent, is required
  - Changed the Transferee ("to) Member/Company) must confirm the resource to Generation Owner, or designated agent, is required to confirm the ownership information

Revision 53 (11/19/2020):

Periodic Review

Section 7.1.2 Voltage and Reactive Control

- Clarified requirement that following an AVR replacement, if new AVR has PSS functionality, PSS should also be commissioned and placed in service
- Removed reference to email as alternative for voltage schedule communications. Sync up with latest revision of M-3.

Section 7.3 Critical Information and Reporting Requirements

- Clarified that change of state includes changing output of self-scheduled units.

Section 7.5.1 Generation Resource Operational Exercise

- Cold Weather Exercise – Reduce to recommendation for GOs to self-schedule in advance of winter
- Replaced entire section with statement that GOs should consider self-schedule units for test prior to cold weather operations

Section 7.5.2 Generation Resource Cold Weather Checklist

- Added clarification on timing based on latest NERC guidance

Section 8.2.3 Real Time Meteorological Tower

- Corrected typo 'through' versus 'though'

Section 10.1.2.H Implementation of Black Start Solutions

- Clarified language regarding Black start terminations

Section 12.2.3 Real Time Meteorological Station

- Corrected typo ‘through’ versus ‘though’

Attachment E: PJM Generator and Synchronous Condenser Reactive Capability Testing

- Section E-2 General Requirements
  - Reworded to improve readability
  - Adding additional clarification regarding the intent of the testing
- Section E.3 Testing Requirements
  - Clarified testing requirements that apply to units testing for the purpose of filing with FERC for OATT Schedule 2 reactive credits
- Section E.8 Post-Test Evaluation
  - Clarified the fact that PJM may update D-curve for due to reliability concerns if GO fails to do so.

Attachment N: Cold Weather Preparation Guideline and Checklist

- Added link to NERC Lessons Learned
- Updated to reflect changes suggested in latest NERC Guideline

Appendix ‘A’ Behind the Meter Generation Business Rules

Administrative changes throughout to align with current business practices

Revision 52 (08/31/2020):

- Appendix A: Behind the Meter Generation Business Rules
  - Change deadline date in business rules #14 and #15 for a request to update an LSE’s network service peak load or obligation peak load as a result of a Capacity Resource changing status to BTMG or a new BTMG from December 1 to October 31. For new BTMG that is scheduled to be in service in the month of November, documentation of the scheduled in-service date needs to be provided to PJM by October 31.

Revision 51 (12/19/2019):

- Definitions and Applicability
  - Generating Facility defined for use in M-14D – removed reference to OATT
- Section 7.1.1 – Generator Real Power Control
  - Added guidance for frequency ride-through for DER
  - Applied the term Generating Facility where appropriate

Revision 50 (12/03/2019):

- Periodic Review
- Throughout

  - Replaced references to Client Manager with Member Relations where applicable
  - Corrected typos and capitalized terms where appropriate
- About this Manual
  - Added subsection covering “Definitions and Applicability”
- Section 1.2 - Generator Commercial Naming Convention
  - Replaced Performance Compliance with Operations Analysis and Compliance
- Section 3.2.4 - Control Center Staffing Requirements
  - Remove reference to Section 6 as it relates to training and certification requirements
- Section 4.1.7 – SCADA—Supervisory Control and Data Acquisition
  - Corrected typo in heading in Exhibit 6
  - Updated Exhibit 6 to include State of Charge for Energy Storage Resources
- Section 4.2.3 – Metering for Individual Generators
  - Added metering requirement specific to Energy Storage Resources
- Section 6.2.2 – PJM Transmission Owner (TO) Operator and Generation Dispatcher Certification
  - Corrected typo
- Section 7.1.5 – Generator Operations Under Emergency Conditions
  - Corrected typo in Exhibit 9
- Section 7.3 – Critical Information and Reporting Requirements
  - Added Energy Storage Resource outage reporting requirements
- Section 7.3.5 – Fuel and Emissions Reporting
  - Replaced references to Supplementary Status Report (SSR) with references to Resource Limitations page in Markets Gateway.
- Section 10.2.3 – Implications for Terminating Black Start Units
  - Updated to cross reference correct section – Section 9
- Attachment D: PJM Generating Unit Reactive Capability Curve Specification and Reporting Procedures
  - Updated to include Energy Storage Resources
  - Corrected references to Exhibit 15
  - Updated stand-alone document containing D-curve examples
- Attachment E: PJM Generator, Energy Storage and Synchronous Condenser Reactive Capability Testing
  - Updated to include Energy Storage Resources

Revision 49 (09/26/2019):

- Appendix A

- Clarified the reporting, netting, and operational requirements for Non-Retail Behind the Meter Generation

Revision 48 (02/25/2019):

- Section 7.1.1
  - Added requirements associated with FERC Order 824 – Primary Frequency Response for new ISAs effective 10/1/18.
- Section 7.1.2
  - Corrected typos
- Section 7.3.1
  - Deleted reference to three working day notification to TO and PJM

Revision 47 (12/20/2018):

- Resource Tracker Changes
  - Section 5.3.7, created a new section to provide the Resource Tracker reporting requirements.
  - Section 5.7.2.12, moved the wording of the requirements to 5.3.7 and allowed this section to reference 5.3.7
- Distributed Energy Resources
  - Section 4.2, clarified metering requirements for generator used as demand response resource to reduce load and to inject power with appropriate interconnection agreement

Revision 46 (12/10/2018):

- Cover to Cover Periodic Review
- Replaced the term Generator Owner and Generator Operator with Generation Owner throughout to make distinction between PJM and NERC-defined terms
- Grammatical corrections throughout
- Introduction
  - Added reference to PJM Reliability Assurance Agreement (RAA)
- Section 1.1
  - Remove outdated reference to Attachment G
  - Change reference to Resource Adequacy Planning group to Capacity Market Operations
- Section 2.1
  - Renamed section to Generation Owner Responsibilities
  - Revised language in entire section for clarity of roles and responsibilities
  - Removed reference to PJM West RAA

  - Removed itemized listing of tasks
- Section 4.1.5 EMS Data Exchange
  - Added data point for Performance Assessment Interval (PAI) Trigger via SCADA, ICCP
- Section 5.3 Marketing Tools
  - Changed “PJM Marketing Tools” to “PJM Markets and Operations Tools”
- Section 5.7.2.10 PJM Tools
  - Clarified the requirement to update the eDART Contact Survey for all new and transferred units.
- Section 7.1.2
  - New process for voltage schedule issuance and acknowledgement
- Section 7.1.5
  - Added Deploy All Resources to Exhibit 8, for consistency with Manual 13
- Section 7.3 Critical Information and Reporting Requirements
  - Added clarification for situations requiring verbal notification to PJM Dispatch.
- Attachment “B”: New PJMnet Customer Implementation Voice/Data Communications Template
  - Replaced references to PJM primary/backup control centers with Jefferson/Milford control centers
- Attachment “E” PJM Generator and Synchronous Condenser Reactive Capability Testing
  - Added reference to Manual 1 regarding telemetry requirements
  - Added clarification on test evaluation for units testing above or below stated limits
- Attachment “M” Wind Unit Dispatchability Check List
  - Added clarification on frequency for updating Eco Max limits
- Attachment “N” Cold Weather Preparation Guideline and Checklist
  - Updated reference and link to ReliabilityFirst Plant Winterization - Lessons Learned & Best Practices
  - Updated link to NERC Extreme Winter Weather Events - Training Presentation

Revision 45 (09/27/2018):

- Appendix A: Added new sub-section for Transmission Owner BtMG Reporting and Communication Process

Revision 44 (06/01/2018):

- Added Section 2.2: Transfers of a Generation Facility and Name Changes of Generation Owners and Interconnection Customers

  - Section 2.2.1 – describes guidance, expectations and required information associated with a generation transfer from the generator owner
  - Section 2.2.2 – describes the process that must occur to disclose that a generator or Interconnection Customer has changed its name
  - Section 2.2.3 – links Section 2.2 with the actual generation transfer process described in Section 5.7
- Added Section 5.7.1 to describe the overall method that a Member must initiate a request for a generation transfer
- Added Section 5.7.2 to provide a general overview of the various type of information needed to effectuate a generation transfer
- Added Section 5.7.3 to provide guidance surrounding various timeframes and deadlines that may occur during a generation transfer

Revision 43 (02/26/2018):

- Revised Section 11 Generator Data Confidentiality Procedures to clarify wording and included parameter data to be provided to a Transmission Owner for system restoration planning purposes
  - Revised Exhibit 11 therein
- Revised Attachment J: Generator Data Release Matrix to reflect changes in Section 11
  - Added column for generator parameters
- Revised Sections 10.2, 10.3.2 and 11.1: References to Manual 33 updated

Revision 42 (12/22/2017):

- Periodic Review
- Multiple Locations – administrative changes - replaced Local Control Center with Transmission Owner and replaced LCC with TO
- Exhibit 1 and Section 6 – administrative changes – replaced System Operator Certification with PJM TO Operator and Generation Dispatcher Certification for consistency with Manual 40
- Section 4.1.7 - SCADA—Supervisory Control and Data Acquisition – grammatical correction
- Section 4.3 - Synchrophasor Communication System – clarified network requirements, deleted Exhibit 7, revised link to registration form and updated email address used for reporting problems
- Section 5.3.4 eDART – added requirement for non-black start generators to be modeled in eDART consistent with the PJM EMS model. Also, added requirement that all new black start generators be modeled individually in eDART and EMS.
- Section 5.7 Generation Transfer Process – new section relocated from Manual M10

- Section 7.1.1 Generator Real Power Control - revised over frequency level per NERC Reliability Standard PRC-024-2
- Section 7.1.2 Voltage and Reactive Control
  - added requirement that the Transmission Operator copy PJM via email on the voltage schedules assigned to the Generator Owner/Operator
  - added the requirement for non-synchronous generating facilities which entered the New Service Queue on or after November 1, 2016 to provide dynamic reactive power and follow the assigned voltage schedule. (FERC Order No. 827 - Reactive Power Requirements for Non-Synchronous Generation)
  - deleted voltage schedule exemption details and left the reference to the process as described in M3.
  - clarified that AVR & PSS outage notifications must be made verbally and via eDART
  - clarified the wording in the note related to Power System Stabilizers
- Section 7.1.6 Black Start – clarified wording regarding the TO's capability and authority during system restoration
- Section 7.3 – Critical Information and Reporting Requirements - added requirement for Generation Owners to notify PJM of any operating conditions that could potentially result in a single contingency causing an outage of multiple generation resources
- Section 7.3.5 Fuel and Emissions Reporting – removed references to capacity resources and added reference to specific EOP standard
- Section 10.1.2 – Black Start Selection Process, D. RFP Proposal Evaluation – updated the criteria including preferences for units that are dual fueled or have firm gas transportation contracts and outlined proposal evaluation criteria
- Attachment N: Cold Weather Preparation Guideline and Checklist – minor revisions based on Version 2 of NERC's Generating Unit Winter Weather Readiness Reliability Guideline. Updated the links to the NERC Guideline and the RF presentation.

Revision 41 (6/1/2017):

- Several locations – administrative change – references to PJM Manual M-3, Transmission Operations, Section 3.3.3, changed to Manual M-3, Section 3.11 to reflect the transfer of the Generator Voltage Schedules section of M-3 from Section 3.3.3 to Section 3.11.
- Section 2.1 – Generator Owners' Responsibilities – administrative change - updated references to other documents
- Section 2.1 – Generator Owners' Responsibilities and Attachment L: Jointly Owned Resource Communication Model – changed references from Generation System Operator to Generation Dispatcher for consistency with PJM Manual, M-40, Training and Certification Requirements
- Section 4.1.5 EMS Data Exchange – revised Exhibit 2 to include requirement for two second generation MW telemetry data for all units participating in the PJM regulation market

- Section 4.2.2 Metering Plan – summarized real-time telemetry requirements in chart format and added requirement for solar farms
- Section 5.4.4 Grid Accounting – administrative change – changed name of PARs from Ramapo to NY-NJ
- Section 5.6.2 Data Requirements – administrative change – corrected end of re-bid period to 1415 hours
- Section 6.3.4 Other Requirements – added requirements to have and follow a voltage schedule
- Section 7.1.1 Generator Real-Power Control – deleted the qualifier “larger than 20 MW” from the requirements to meet the frequency guidelines. Reference FERC Order # 828, Requirements for Frequency and Voltage Ride Through Capability of Small Generating Facilities issued July 21, 2016.
- Section 7.1.1 Generator Real-Power Control – added clarification that governor outages must be reported for all units via eDART
- Section 7.1.2 Voltage and Reactive Control:
    - Added the requirement that newly connected generator facilities be provided a voltage schedule per PJM Manual M-3, Section 3.11.
    - Clarified Automatic Voltage Regulator required operating modes and included more specific reason for requesting an exemption from following a voltage schedule.
    - Added specifics for notifications of Power System Stabilizer outages.
- Section 7.3 Critical Information and Reporting Requirements – added clarification for Generation Owners that own transmission equipment to notify the affected Transmission Owner who must then submit outage requests to PJM via eDART for this generation-owned equipment.
- Section 7.3.4 Generating Unit Reactive Capability Reporting
    - Clarified that these requirements are applicable only for units physically located within the PJM RTO Footprint
    - Clarified language for Pre-Summer and Pre-Winter eDART reactive capability review.
- Sections 8.2.1 Initial Data Requirements & 8.2.3 Real Time Meteorological Tower – Clarified that longitude and latitude are required to be supplied in decimal degrees
- Section 12 – added new section for Solar Park Requirements –Reference FERC Order # 764, Integration of Variable Energy Resources issued June 22, 2012.
- Attachment A: Added voltage schedule and reactive capability curve requirements to New Generator Checklist.
- Attachment D - PJM Generating Unit Reactive Capability Curve Specification and Reporting Procedures:
    - Clarified that these requirements are applicable only for units physically located within the PJM RTO Footprint

  - Included guidelines for selecting points on the D-curve to be submitted via eDART
  - PJM Reactive Reserve Check (RRC) – revised description, added reference to Manual 3, Transmission Operations for details and generator owner responsibilities, and deleted Exhibit 19
- Attachment E: PJM Generator and Synchronous Condenser Reactive Capability Testing
  - E2 – General Requirements - Clarified that reactive testing is not required for capacity and energy resources located outside the PJM RTO footprint
  - E3 – Testing Requirements – removed link to Reactive Capability Testing Form
  - E.4.1 – Clarified that maintenance work on the facility that may affect the reactive capability of the units must be completed prior to contacting PJM to initiate the study process.
  - E.4.1 – Note 1 – Added the words “and attempt” in the sentence: “The LCC and PJM will work together and attempt to adjust the transmission system voltage and mitigate the external condition.”
  - E.4.1 - Revised test submittal process to include submitting Reactive Test Results via eDART
  - E.9 Test Tracking – deleted section. No longer required due to addition of submitting test results via eDART.
  - E.10 – renumbered to E.9 and revised to remove sample test submission forms and included eDART screenshot of Reactive Result Ticket.

Revision 40 (01/01/2017):

- 7.3.5 Fuel Limitation Reporting – Updated title, updated Seasonal Reporting section, added a section on Periodic Reporting, and removed details on Real Time Reporting. Deleted Exhibit 11, Sample Data (Fuel Baseline)
- Deleted references to Manual 35, Definitions and Acronyms which has been retired.

Revision 39 (09/01/2016):

- Cover to Cover Periodic review
- Administrative Change – Section 4.2.1, updated reference to M-01 for outage communication.
- Section 4.3.4 Data Exchange and Management Requirements – added details and clarifications of PMU and PDC requirements for new generation facilities.
- Section 7.1.2 Voltage and Reactive Control – replaced PJM System Operations Subcommittee Chair with the email address “VoltageScheduleExemption@pjm.com” for the location where requests for voltage schedule exemptions should be directed to. Also included examples of exemption request types and updated the note referencing M-03, Section 3.3.3 related to real-time exemption criteria..

- Section 7.5.1 Generation Resource Operational Exercise – revised to eliminate Capacity Performance resources from being eligible to participate. Also added link to form used for tracking unit performance
- Section 7.5.2 Generation Resource Cold Weather Checklist – added date to start the Cold Weather Checklist acknowledgement process.
- Administrative Change – Section 8 Wind Farm Requirements, updated Attachment L references to include new name
- Attachment E: PJM Generator and Synchronous Condenser Reactive Capability Testing, added reference to Compliance Bulletin CB023 in Section E.2.
- Attachment G: PJM Generator Markets and Operations Process Flow Diagram – Deleted Attachment – information now included in the interconnection process via PJM's Client Manager.
- Attachment H - corrected name to PJM Generation and Transmission Interconnection Planning Team Role Clarity Diagram
- Attachment N: Cold Weather Preparation Guideline and Checklist – reviewed and updated and added references f. and g. to ReliabilityFirst's presentation and report on winter preparedness.
- Appendix A – Added reference to Manual 3a for directions to fulfill telemetry requirement.

Revision 38 (06/01/2016):

- Administrative Change - Updated references from eMKT to Markets Gateway
- Administrative Change – Updated references from eFTR to FTRCenter
- Attachment L: Jointly Owned Resource Communication Model – Revised to include additional details for Option 2.

Revision 37 (12/22/2015):

- Periodic Review
- Administrative Change: Updated references from edata to Data Viewer
- Introduction – Added reference to eDART User Guide and eGADS User Manual
- Exhibit 10 – Included Minimum Generation Advisory and revised Minimum Generation limits to 2500 MW
- Sections 7.3.1, 7.3.2, and 7.3.3 – Added definitions of Generator Planned, Maintenance, and Forced Outages respectively
- Section 7.3.4 - Generating Unit Reactive Capability Reporting – added operating procedure limit as a potential real-time limitation to reactive capability
- Attachment A – Updated per current process and added reference to PJM's Member Relations department

- Attachment D: PJM Generating Unit Reactive Capability Curve Specification and Reporting Procedures – added additional data requirements for reporting the Continuous Generating Unit Reactive Capability Curve
- Attachment E: PJM Generator and Synchronous Condenser Reactive Capability Testing:
- – E.2 – General Requirements – added preferred time requirements for maximum lagging and maximum leading tests. Also added reference to Manual M-21 for Real Power testing
- - E.3 Testing Requirements – added requirement that the automatic voltage regulator shall be in service during the testing and also that deviations from the assigned voltage schedule may be allowed to optimize test results. Also added that an operating procedure limit may be a reason to limit reactive capability during the test.
- - E.4.1 MOC (or LCC if testing a synchronous condenser) Actions – enhanced requirement for telemetry check prior to preforming a reactive test, highlighted the notation if a unit is unable to achieve its stated capability
- - E.8.4 Facilities Testing Below 5% - added notations about testing during the PJM preferred time frames as noted in Section E.2 and following the procedure described in Note 1 under E.4.1
- - E.10 Sample forms – revised Reactive Capability Testing Form Sheet 1
- Attachment L – Wind Farm Communication Model: Renamed to Joint Owned Resource Communication Model and revised to be applicable to all jointly owned resources
- Attachment M – Wind Dispatchability Check List – Updated URL for Wind Sepcific Requirements for PJM Wind Resources

Revision 36 (10/01/2015):

- Section 7.5.1, Generation Resource Operational Exercise: Revised to require a primary and alternate date for the exercise, clarified combined cycle offers for generators exercising one CT on alternate fuel, and added the requirement for generators to submit results of the exercise to PJM
- Section 7.5.2, Generation Resource Cold Weather Checklist: Revised to report completion of cold weather preparation checklist via eDART.

Revision 35 (07/28/2015):

- Administrative Change - Updated Attachment C: Changed Contact Information to Engineering Technicians at engtechs@pjm.com

Revision 34 (05/01/2015):

- Section 7.1.1, Generator Real-Power Control: Added generator governor and distributed control system dead band and droop setting requirements consistent with the February 5, 2015 NERC Advisory on Generator Governor Frequency Response.
- Administrative change updated references from eTools to PJM Tools.

Revision 33 (02/05/2015):

- The following revisions and deletions made per PJM Operating Committee "TO Data Feed" special meetings (a.k.a. – generator data confidentiality) and resultant PJM Operating Agreement changes approved by FERC, effective February 5, 2015.
  - Revised Section 11, Generator Data Confidentiality Procedures
  - Revised Attachment J, Generator – Data Release Matrix
  - Deleted Attachment I, Generator Data Confidentiality Agreement
  - Deleted Attachment K, Template Letter for a Transmission Owner Seeking Generator Data Within its Zone to be Released by PJM

Revision 32 (12/22/2014):

- Section 7.1.2, Voltage and Reactive Control and Section 7.3.4, Generating Unit Reactive Capability Reporting - revised statements referencing the timing requirements for notifications for status changes on automatic voltage regulators (AVR), power system stabilizers (PSS), or reactive capability. Changes made to provide consistency with revised NERC Standard VAR-002-3, effective 10/1/2014.

Revision 31 (12/05/2014):

- Revised Section 10: Black Start Generation Procurement.

Revision 30 (11/01/2014):

- Section 7.5, Cold Weather Generation Resource Preparation – new section added
- Attachment N, Cold Weather Preparation Guideline and Checklist – new attachment added

Revision 29 (10/01/2014):

- Annual review for 2014
- Section 4, Data Exchange and Metering Requirements: Added Section 4.1.2 Jetstream and renumbered subsequent sections
- Section 5.3.4, eDART: Updated description
- Section 7.1.3, Notification to PJM for Reactive Power Resource Status during Unit Start-up: Added the words "real-time" to align with NERC Reliability Standard VAR-002-2b
- Section 7.3.3, Unplanned Outage: Added reference to reporting conditions that may affect the availability of resources providing PJM Black Start Service
- Section 7.3.4, Generating Unit Reactive Capability Reporting: Clarified that separate notifications are required for each automatic voltage regulator outage and each power system stabilizer outage
- Section 8.2.3, Real Time Meteorological Tower: Revised for consistency with Tariff and Interconnection Service Agreement requirements

- Attachment D, PJM Generating Unit Reactive Capability Curve Specification and Reporting Procedures: Revised to include synchronous condensers and generator MVAR testing at minimum output
- Attachment E, PJM Generator and Synchronous Condenser Reactive Capability Testing: Revised title and language to align with NERC Reliability Standard MOD-025-2
- Attachment F, Generator Reactive Capability Test Study Process: Deleted Attachment F due to being outdated and replaced with an internal PJM process.
- Attachment M, Wind Unit Dispatchability Check List, Section III, 2.e: Revised language to reflect a change to the SCED logic to improve constraint control and price formation

Revision 28 (07/01/2014):

- Multiple Locations: Replaced references to eMeter with Power Meter
- Section 4.1.1, PJMnet Communications System and Exhibit 3, Guidelines for Metering Installation: Revised per PJM Operating Committee “Member Communication Issue” special meetings (a.k.a. – additional PJMnet connections) and resultant PJM Operating Agreement and Tariff changes approved by FERC effective April 7, 2014.
- Section 4.3: New section for Synchrophasor Communication System resulting from PJM Tariff changes approved by FERC effective December 26, 2013.
- Attachment A, New Generator Check List: Added references to Synchrophasors

Revision 27 (04/11/2014):

- Two of the eSuite Applications have been renamed. Moving forward EES will be known as ExSchedule and eMTR will be known as Power Meter.

Revision 26 (11/01/2013):

- Section 7.1.2, Voltage and Reactive Control: Added applicability for individual generating units greater than 20 MVA.
- Section 7.3.5, Fuel Limitation Reporting: Replaced outdated reference to NERC Guidelines with reference to NERC Reliability Standards.
- Section 7.4 Synchronization and Disconnection Procedures: Added requirement for generators operating or scheduled to operate for PJM to notify PJM prior to attempting a restart following a trip or failure to start.
- Attachment D: PJM Generating Unit Reactive Capability Curve Specification and Reporting Procedures: Changed language in Real-Time PJM Unit Reactive Capability Reporting Process for Temporary Changes section for consistency with Sections 7.1.2 and 7.1.3.
- Attachment E: PJM Generator Reactive Capability Testing: Updated Exception Criteria chart and Sentence 6 in the Testing Requirements for Non-Wind Units Greater than 70 MW and Black Start Units section due to changes in the definition of critical load in Manual M-36.

Revision 25 (9/26/2013):

- Section 7.1.5, Generator Operation under Emergency Operating Conditions: Removed note from Capacity Shortage Procedures chart (Exhibit 8) that referenced a delay in implementation of the Unit Start-up and Notification Alert process until PJM tools and software are in place.

Revision 24 (07/01/2013):

- Introduction and multiple sections revised due to outdated references.
- Section 3.3, Voice Communication Requirements for Generating Entities: Updated with current information.
- Section 4, Data Exchange and Metering Requirements: Updated references, technology types, contacts and data requirements.
- Section 5.1, Market Options: Revised to include current reserve and capacity markets.
- Section 6, Pre-Operational Requirements: Updated references and technology.
- Section 7.1.1, Generator Real-Power Control: Revised for consistency with M-36.
- Section 7.1.2 Voltage and Reactive Control: Relocated statement regarding telemetered status of AVR and PSS to this section from Section 7.1.3.
- Section 7.1.3, Notification to PJM for Reactive Power Resource Status during Unit Start-up: Revised to reflect the changes in NERC Standard VAR-002-2b, R1, effective 7/1/2013.
- Section 7.3, Critical Information and Reporting Requirements: Added references to PJM Peak Period Maintenance Season and changed notification time from 30 minutes to 20 minutes for consistency with Section 7.4.
- Section 7.4, Synchronization and Disconnection Procedures: Revised to include notification times for synchronizing and disconnecting generators from the system.
- Section 8, Wind Farms Requirements: Revised to include references to Attachments L & M.
- Attachment A, New Generator Checklist: Updated requirements and references.
- Attachment H, PJM Generation and Transmission Interconnection Planning Process Flow Diagram, Revised for consistency with Manual M-14A.
- Attachment M, Wind Unit Dispatchability Check List: New attachment.

Revision 23 (04/01/2013):

- Revisions endorsed by MRC on 3/28/2013:
- Multiple Sections and Exhibit 12 – changed Power System Coordination Department to Generation Department, changed Customer Relations and Training Department to Member Relations Department, and changed PJM Market Monitoring Unit to Independent Market Monitor
- Section 4.1.4 EMS Data Exchange, Exhibit 2: Added data points required to participate in the PJM Regulation Market

- Section 5 Participation in PJM Markets: Revised language in multiple sections to reference the specific manuals applicable to the energy and ancillary services markets.
- Section 6.2 Training and System Operator Certification: Details replaced with references to PJM Manual M40, Training and Certification Requirements.
- Section 7.1.1, Generator Real-Power Control: Added reference to PJM M36, System Restoration in place of detailed frequencies
- Section 7.1.2 Voltage and Reactive Control: Revised language for clarity and consistency with Manual M-03, Transmission Operations, Section 3.3.3.
- Section 7.1.3 Notification to PJM for Reactive Power Resource Status during Unit Start-up: Added language regarding providing telemetered status of AVR and PSS to PJM.
- Section 7.1.5 Generator Operation under Emergency Operating Conditions, Exhibit 9: Corrected location of the note referencing the Unit Startup Notification Alert.
- Section 7.3.5 Fuel Limitation Reporting, Real Time Reporting: Updated CT information for consistency with Manual M13, Emergency Operations.
- Section 8.1 Computer System Data Exchange: Added reference to Wind Curtailment Indicator.
- Section 9.1.1 Generator Deactivation Request: Added PJM email address where deactivation requests are to be sent.
- Attachment E: PJM Generator Reactive Capability Testing: Added testing requirements for wind generating stations, clarification for nuclear unit minimum MVAr tests and additional language for units that claimed internal operational limitations.
- Attachment L: Wind Farm Communication Model: Added reference to Wind Curtailment Indicator.

Revisions endorsed by MRC on 2/28/2013:

- Section 10 Black Start Generation Procurement: Added new Section 10.1 and revised Section 10.2 per System Restoration Senior Strategy Task Force recommendations approved by the MRC 2/28/2013.

Revision 22 (02/28/2013):

- Administrative Change: update all references of “eSchedules” to “InSchedules”

Revision 21 (10/01/2012):

- Section 7.1.5: Generator Operation under Emergency Operating Conditions: New Alert type called Unit Start-up Notification Alert in Capacity Shortage Procedures Table to align with Manual M10 and M13 revisions.
- Section 8.3: Forecast Data Usage: New section 8.3.3 “Real-time Operating Reserve Settlement” referring to PJM use of Short Term Wind Power Forecast in calculation for Lost Opportunity Cost for Wind resources.

- Section 10.2: Cost-Based Components for Black Start Replacement; Deleted section in its entirety.

Revision 20 (07/20/2011):

- Section 4: Data Exchange and Metering Requirements: Edits to Section 4.1.6 to delete outdated SCADA details.
- Section 6: Pre-Operational Requirements: Edits to Section 6.3.3 to update and clarify test energy requirements for new interconnecting resources.
- Section 7: Generator Operations: Added new Section 7.1.3 to address notification of automatic voltage regulator and power system stabilizer status changes to PJM Dispatch.
- Attachment C: New PJM Customer Voice / All Call Communications Request Form: Replaced form with updated version
- July 22, 2011: Corrected Revision number on page 7.

Revision 19 (10/01/2010):

- Incorporated Wind Farm Communication Model as Attachment L.

Revision 18 (June 1, 2010):

- Revised Attachment D, E, and F to remove redundancy and reorder.
- Modified Attachment E to change requirement to submit completed PJM Leading and/or Lagging Test Form R to PJM within 30 calendar days after completion of the testing (changed from 10 days).
- Added bullet 7 under Section Data Requirements in Attachment D, “Company can either test or apply the best engineering judgment to construct D-curve at min load points.”
- Added a line in Bullet 5 under Section Testing Requirements for both Units Larger than 70 MW and Black Start Units in Attachment E, “This requirement may require a departure from scheduled voltage during the test, provided no adverse effect on the validity of test results can be demonstrated.”
- Revision 17 (01/01/2010):
- Updated section 7.1.2 – language for voltage schedule exemption (VAR-001/002)
- Added language to section 7.1.5 – Black Start units operators shall not permit their fuel inventory for Critical Black start CTs to fall below 10 hours – if it falls below this level, unit operators shall notify PJM and place the unit in Max Emergency

Revision 16 (10/01/2009):

- Section 4: Data Exchange and Metering Requirements: Updated Sections 4.2.2 and 4.2.3 to address metering requirements for distributed renewable generation.
- Section 6: Pre-Operational Requirements: Updated Sections 6.3.1to address operations requirements for distributed renewable generation.
- Section 7: Generator Operations: Edits to voltage schedule details in Section 7.1.2.

- Section 8: Wind Farm Requirements: Minor edit in Section 8.1, updated Section 8.2.4 Generator Outage Reporting.
- Attachment D: PJM Unit Reactive Capability Curve Specification and Reporting Procedures: Updates in PJM Reactive Reserve Check (RRC) section.
- Attachment E: PJM Generator Reactive Capability Testing: Updates throughout “Testing Requirements for Units Larger than 70MW and Blackstart units” section; Replaced Lagging Form R and Leading Form R.
- Attachment F: Generator Reactive Testing Capability Procedures: Updates to Testing Procedure, Study Process Example, Communications and Coordination, Exit Strategy, and Results Reporting sections. Edits include identifying PJM Reliability Engineer as lead PJM coordinator for reactive testing process.

Revision 15 (04/01/2009):

- Section 4: Data Exchange and Metering Requirements: Updated Exhibits 4 and 5 to reflect the use of secure internet for small generators (100 MWs or less).
- Section 8: Wind Farm Requirements: Added new section describing Wind Farm Requirements
- Section 9: Generator Deactivations: Replaced PJM System Operations Generation Manager with PJM Power System Coordination Manager.
- Reactive Testing Attachments E & F: Renamed “Critical Steam” to “Near-term Steam” to avoid confusion with predefined Critical Infrastructure Facilities.
- Reactive Testing Attachments E & F: Added MOC requirement to review telemetered Generator MVAR accuracy with PJM Reliability Engineer in advance of commencing reactive test.
- Replaced “Control Area” with “Balancing Authority” to align with NERC definitions.

Revision 14 (12/17/2008):

- Added existing Behind the Meter Generation Business Rules as Appendix A.

Revision 13 (5/23/2008):

- Section 4: Data Exchange and Metering Requirements
  - Updated Exhibits 4 and 5 to reflect the use of secure internet for small generators (50 MWs or less).
- Section 5 and Section 7
  - Modified to provide clarity regarding requirement to update generator reactive capability curves (D-Curves) following planned unit upgrades.
- Section 7: Generator Operations
  - Changes for new Bulk Electric System definition.

Revision 12 (12/03/2007):

- Provided clarification to Attachment E: PJM Generator Reactive Capability Testing and Attachment F: Generator Reactive Capability Testing Procedures, specifically, the ability to test outside May 1 – September 30th window on an exception basis, requirement to perform lagging test for 1 hour, requirement to report test results to Operations Planning Department within 10 days, and requirement to review accuracy of MVAR telemetry prior to beginning the test.

Revision 11 (08/29/07):

- Section 5: Participation in PJM Markets, Ancillary Services, Reactive Supply and Voltage Control from Generating Sources Service
  - Added requirement for PJM to provide to the Generation Owner documentation of requirements for generator step-up transformer tap changes.
- Section 7: Generator Operations, Critical Information and Reporting Requirements
  - Added requirement for the Generator Operator to notify PJM of a status or capability change on any generator Reactive Power resource.
- Attachment E: PJM Generator Reactive Capability Testing
  - Modified Lagging Form R and Leading Form R to indicate that readings for Hour 2 are entered only if required.

Revision 10 (05/15/2007):

- General Changes:
  - Renamed references to Control Center Requirements and Dispatching Operations Manuals as Control Center and Data Exchange Requirements and Balancing Operations Manuals respectively.
- Section 1: Black Start Replacement Process
  - Changed Generation Department to Power System Coordination Department in section on Generator Commercial Naming Convention.
- Section 8: Generator Deactivations
  - Changed Generation Department to Power System Coordination Department in the text and in the process flow chart.
- Section 9: Black Start Replacement Process - Process Flow Diagram
  - Changed Generation Department to Power System Coordination Department.
- Section 10: Generator Data Confidentiality Process
  - Changed Generation Department to Power System Coordination Department.
- Attachment D: PJM Generating Unit Reactive Capability Curve Specification and Reporting Procedures
  - Changed Generation Department to Power System Coordination Department.

- Attachment E: PJM Generator Reactive Capability Testing
  - Clarified testing requirement as 20% of number of eligible assets per year.
- Attachment F: Generator Reactive Capability Testing Procedures
  - Changed Generation Department to Operations Planning Department.
- Attachment K: Template Letter for a TO Seeking Generator Data
  - Changed Generation Department to Power System Coordination Department.

Revision 09 (12/18/06):

- Attachment E: PJM Generator Reactive Capability Testing
  - Updated to reflect new exception criteria for PJM leading/lagging reactive tests.
- Attachment F: Generator Reactive Capability Testing Procedures
  - Updated to reflect new exception criteria for PJM leading/lagging reactive tests.
- References to eMarket changed to eMKT throughout.
- Definition of FTR changed to financial transmission rights (Section 5).
- Introduction trimmed to eliminate redundant information.
- Revision History permanently moved to the end of the manual.

Revision 08 (07/24/06):

- Section 9: Black Start Replacement Process
  - Updated to include new triggers for Black Start Replacement Process.
  - Updated to reference the recently defined Minimum Critical Black Start Requirement.
- Updated PJM List of Manuals (Exhibit 1).

Revision 07 (06/19/06):

- Section 5: Participation in PJM Markets
  - Change “unit” references to “resource” as they apply to Demand Side Response providing Ancillary Services.
  - Change “Spinning” references to “Synchronized” as they apply to Demand Side Resources providing Ancillary Services.
  - Added Attachment F: Generator Reactive Capability Testing Procedures and re-lettered all following attachments.

Revision 06 (12/15/05):

- Update to Attachment C on New PJM Customer Voice/All Call Communications Request Form to reflect most current version of the form.

Revision 05 (08/10/05):

- Added new Section 9: Black Start Replacement Process.

- Moved old Section 9: Generator Data Confidentiality Procedures to Section 10.

Revision 04 (04/12/05):

- Modified Section 8 to include revised Generation Deactivation process and procedures as approved by FERC on January 25, 2005.

Revision 03 (02/01/05):

- Addition of new Section 9 on PJM Generator Data Confidentiality Procedures
- Update to Attachment D on PJM Generating Unit Reactive Capability Curve Specification and Reporting Procedures to incorporate recent changes to the Reactive Reserve Check (RRC) Reporting process.
- Addition of new Attachment E on PJM Generator Reactive Capability Testing. Current Attachments E and F have been renamed to Attachments F and G respectively.
- Addition of new attachment H including the Generator Data Confidentiality Agreement.
- Addition of new attachment I including the Generator – Data Release Matrix
- Addition of new attachment J including a template letter for a Transmission Owner seeking generator data within its zone to be released by PJM
- Update to Section 7 on Generator Operations to include new seasonal review of PJM generator reactive capabilities and reference to new Attachment E.

Revision 02 (03/10/04):

- Added new Section 8 on Generator Deactivations.

Revision 01 (12/31/03):

- Update format
- Renumber exhibits

Revision 00 (04/04/03):

- This revision is the initial release of the PJM Manual for *Generator Operational Requirements (M-14D)*. This manual is one among the four new manuals obtained from splitting the original PJM Manual for *Generator Interconnections and Operations (M-14)*.
- The summary of revisions for this manual follows:
  - Added new Section 1 on Generator Markets & Operations.
  - Added new Section 2 on Responsibilities of Generation Owners.
  - Added new Section 3 on Control Center Requirements based on excerpts from PJM Manual M-01 on Control Center and Data Exchange Requirements (Section 2 & 3).
  - Added new Section 4 on Data Exchange and Metering Requirements based on excerpts from old PJM Manual M-14 on Generation Interconnections and Operations (Sections 2 & 5).

- Added new Section 5 on Participation in PJM Markets based on excerpts from old PJM Manual M-14 on Generation Interconnections and Operations (Sections 3 & 4).
- Added new Section 6 on Pre-Operational Requirements based on excerpts from old PJM Manual M-14 on Generation Interconnections and Operations (Sections 4 & 5).
- Added new Section 7 on Generator Operations based on excerpts from old PJM Manual M-14 on Generation Interconnections and Operations (Sections 4 & 5), PJM Manual M-3 on Transmission Operations (Section 3), and PJM Manual M-13 on Emergency Operations (Section 5).