This manual will be retired as of 11/30/2026. Its contents are contained within 14H.

PJM Manual 14G:

Generation Interconnection Requests

Revision: 9

Effective Date: November 18, 2026

Prepared By
Interconnection Planning Department

PJM © 2026

Table of Contents

Table of Exhibits 5

Approval 6

Current Revision 7

Introduction 8

About This Manual 8

Section 1: Overview of Generation Interconnection Request Process 10

1.1. PJM Interconnection Process Overview 10

1.2 Request Types Submitted by Generator Interconnection Customers 11

1.3 Generation Interconnection Customer Classification 12

1.4 Interconnection Procedures for FERC Jurisdictional Facilities and Non-FERC Jurisdictional Facilities 13

1.5 Interconnections with municipalities, co-operatives, or non-PJM Transmission Owner member distribution companies 14

1.6 Behind the Meter Generation 14

1.7 Demand Response 17

1.8 Service below Generating Capability 17

1.9 Surplus Interconnection Service 18

Section 2: Entering the New Services Queue 25

2.1 Attachment N Requests 26

2.2 Attachment Y Requests 27

2.3 Attachment BB Requests 28

2.4 Site Control 29

2.5 Multiple requests behind the same Point of Interconnection 31

2.6 Work Papers 31

Section 3: Reports and Agreements 33

Section 4: Generator Interconnection Requirements, Rights and Obligations 34

4.1 Requirements for Generating Units 34
4.2 Generator Power Factor Requirements 34
4.3 Electing Capacity Resource Status versus Energy Resource Status 36
4.4 Transfer of Capacity Interconnection Rights 36
4.5 Changes to Existing or Proposed Generation 38
4.6 Multiple Requests Behind the Same Meter, including Interconnection Requests and Queue Position 41
4.7 Wind and Non-Synchronous Generators 42
4.8 Serving Load as a Generator 42
4.9 Station Power 42

Section 5: Small Generator Interconnection Requests 44

5.1 Small Generation Interconnection Considerations (20 MW or less) 44
5.2 Pre-Application Process 45
5.3 Study Requirements and Cost 45
5.4 Expedited and/or Combined Study Analysis 48
5.5 Specific Provisions for Resources of 10 MW or Less 49
5.6 Specific Provisions for Resources Greater than 10 MW up to 20 MW 49

Section 6: Large Generation Interconnection Requests 50

Attachment A: Generation Interconnection Feasibility Study Data 51

A.1 Scope 51
A.2 Data Requirements for PJM RTEPP Feasibility Studies 51

Attachment A-1: Feasibility Study Data Form 52

Attachment B: System Impact Study Data 65

B.1 Scope 65
B.2 Data Requirements for PJM RTEPP System Impact Studies 65

Attachment B-1: Dynamic Model Study Request Form 66

Attachment B-2: System Impact Study Data Form..... 69

Attachment C: Small Generator (10 MW or Less) Technical Requirements and Standards..... 84

C.1 Scope 84
C.2 Purpose 84
C.3 Background and Discussion 84
C.4 General Application Note for Transmission System Interconnections 85
C.5 Tariff / IEEE 1547 Definition Cross-Reference..... 85
C.6 Applicable Technical Requirements and Standards 87
C.7 Relevant Codes and Standards..... 98

Attachment D: Small Generator (greater than 10 MW up to 20 MW) Technical Requirements and Standards 100

D.1 Scope 100
D.2 Purpose 100
D.3 Background and Discussion 100
D.4 General Application Note for Transmission System Interconnections 101
D.5 Tariff / IEEE 1547 Definition Cross-Reference..... 102
D.6 Applicable Technical Requirements and Standards 103
D.7 Relevant Codes and Standards..... 113

Attachment E: Generator Reactive Deficiency Mitigation Process 114

E.1 Scope 114

Attachment F: SCADA Requirements by Transmission Owner Region 117

Attachment G: Surplus Interconnection Study Data 118

G.1 Scope 118
G.2 Data Requirements for Surplus Interconnection Studies..... 118

Revision History **119**

Table of Exhibits

Exhibit 1: Surplus Interconnection Service Example 19

Exhibit 2: Surplus Interconnection Request Process 21

Exhibit 3: pjm.com New Services Request - Queue Point page 25

Exhibit 4: Decision Tree to Determine New Service Request Tariff Attachment..... 26

Exhibit 5: Process Flow for Evaluation of Technological Advancement Request 41

Exhibit 6: Combined Study Target Date 49

Approval

Approval Date: 07/05/2023
Effective Date: ~~07/26/2023~~11/18/2026

Jason Shoemaker, Manager

Interconnection Projects

Current Revision

Revision 9 (11/18/2026):

- Manual will be retired as of 11/30/2026. Its contents are contained within M14H.

~~**Revision 8 (07/26/2023):**~~

- ~~Manual 14G updates to incorporate Interconnection Process Reform Tariff changes filed in Docket ER22-2110-000.~~
    - ~~Introduction section was updated to include applicability language.~~

Introduction

Welcome to Generation Interconnection Requests Manual. In this Section you will find:

- A table of contents
- An approval page that lists the required approvals and the revision history
- This Introduction
- Sections summarizing the application process, study process, agreements tendered, and requirements, rights and obligations specific to Generation Interconnection Customers.
- Attachments that include additional supporting documents and tables.

About This Manual

This PJM Manual, *Generation Interconnection Requests* is one of the PJM Manual 14 series family. This manual guides developers of generation projects through the planning and study phase of their proposed project up to the request for facility construction.

Applicability

This manual shall apply to apply to:

(a) any New Service Request received prior to April 1, 2018; and

(b) any New Service Request for which, as of the Transition Date (defined in Tariff, Part VII), the Interconnection Customer has received for execution an Interconnection Service Agreement or wholesale market participation agreement or has directed the PJM to file an Interconnection Service Agreement or wholesale market participation agreement unexecuted.

New Service Requests received on or after April 1, 2018 for which Interconnection Customers have not received for execution or directed to be filed unexecuted an Interconnection Service Agreement or wholesale market participation agreement will be subject to the Generation Interconnection Procedures set forth in PJM Manual M14H, as applicable.

Intended Audience

The intended audience for this PJM Manual includes the following:

- A New Service Customer who proposes to develop generation facilities within PJM.
- Existing Generation Owners planning increases to an existing generating resource.
- PJM Transmission Owners and other PJM Members and their staffs.
- PJM staff.

References

The entire PJM Manual 14 series addresses issues that may be related to or of interest to the Interconnection Customer. The reader of this manual is urged to review the other manuals for additional material of interest. All PJM manuals can be found in the library section on PJM's website. In addition, the reader is urged to also check PJM committee postings for possible draft revisions that may be awaiting posting under the Library/Manuals section of PJM.com.

Section 1: Overview of Generation Interconnection Request Process

Welcome to the Overview and Determining your Customer Type section of the PJM Manual for **Generator Interconnection Requests**. In this section you will find the following information.

- A description of PJM's interconnection process as outlined in the PJM Manual 14 series.
- Generator Interconnection project types received by PJM.
- Guidance for the Generator Interconnection Customer on applicable Tariff attachments, studies, and agreements based on the type of the interconnection request.
- Guidance for Generator Interconnection Customers on the process required for FERC jurisdictional versus non-FERC jurisdictional interconnection.
- Guidance for Generator Interconnection Customers seeking to connect to a municipality, co-operative or non-PJM Transmission Owner member distribution company that are not-jurisdictional to PJM's Tariff.
- Guidance for Generator Interconnection Customers considering a Behind the Meter Generation interconnection.

1.1. PJM Interconnection Process Overview

The PJM Regional Transmission Organization (RTO) has the responsibility for planning the expansion and enhancement of the PJM Transmission System on a regional basis. As the RTO, PJM administers the connection of generators and new transmission facilities to the PJM Transmission System through the New Services Requests process. In this role, PJM coordinates the planning process for connection of new generation and/or new transmission facilities (including upgrades to either), coordinates the reliability studies for the operation of new generation and/or new transmission facilities (including upgrades to either), and oversees the construction of the required Interconnection Facilities and any associated network upgrades.

Manual 14G is one in a series of PJM Planning Manuals which cover all aspects of Transmission Planning including customer interconnections and transmission expansion. PJM recommends that New Service Customers first review the interconnection process as outlined in the Manual 14 series:

Manual	Title	Description
14A	New Services Request Process	Guides New Service Customers through the general application, study and agreement process
14B	PJM Region Transmission Planning Process	Describes the process of planning baseline expansion facilities and base case development

14C	Generation and Transmission Interconnection Facility Construction	Covers the lifecycle of a project from agreement execution to commercial operation and also describes the process of tracking RTEP projects.
14D	Generator Operational Requirements	Identifies the markets and operations requirements for generators to connect to the PJM system.
14E	Upgrade and Transmission Interconnection Requests	Identifies the specific requirements, study/agreement overview, and rights for Upgrade Requests and Merchant Transmission Interconnection projects proposed on the PJM system.
14F	Competitive Planning Process	Outlines the process to conduct competitive proposal windows consistent with Order No. 1000.
14G	Generation Interconnection Requests	Identifies interconnection requirements, upgrade requirements, study/agreement overview, and rights for any generator customer.

PJM Manual 14G augments PJM Manual 14A and describes additional requirements, rights and obligations applicable to the generator interconnection customer. A project that completes an executed Interconnection Service Agreement and Interconnection Construction Service Agreement or Upgrade Construction Service Agreement through PJM Manual 14G will then transfer to PJM Manual 14C for construction implementation.

1.2 Request Types Submitted by Generator Interconnection Customers

PJM receives different request types from Generator Interconnection Customers as identified below:

Small Generation	(20 MW or below) Customers requesting to interconnect generating facilities onto the transmission grid and participate in the PJM wholesale market.
Large Generation	(Over 20 MW) Customers requesting to interconnect generating facilities onto the transmission grid and participate in the PJM wholesale market.
Generation Upgrades	Generation customers requesting to increase the Capacity, energy or MFO of an existing generator or a previously queued generation request.
Fuel Changes	Generator Interconnection Customers requesting to modify the fuel type from their original interconnection queue request.

1.3 Generation Interconnection Customer Classification

The PJM Tariff classifies a party wishing to perform the following on the PJM Transmission System as a Generation Interconnection Customer:

- Interconnect a new generation facility to the Transmission System in the PJM region, or
- Increase the capacity of an existing generation facility interconnected with the Transmission System in the PJM region, or
- Interconnect a generating unit to distribution facilities located in the PJM Region that are used to make wholesale sales using the output of the generating unit.

According to the Tariff, there are different agreements required to request service depending on the whether or not the generator interconnection is considered to be FERC Jurisdictional. The requester must submit the proper attachment based on the type of service being requested. The following chart depicts the various types of service, the associated customer types, the applicable PJM Manual references and the study process flow through final agreements. The first two columns are specific to Generator Interconnection Customers.

New Services Requests Swim Lane Diagram

Project Type Requested	Customer Owned Generation Request (20 MW or less)	Customer Owned Generation request (Over 20 MW)	Customer owned Merchant Transmission Facilities Request	Customer Funded Upgrade to Transmission Facilities Request	Incremental Auction Revenue Rights Request	Transmission Service into, out of or through PJM
Customer Type	Generation Interconnection Customer	Generation Interconnection Customer	Transmission Interconnection Customer	Transmission Interconnection Customer	Upgrade Customer	Eligible Customer
Applicable Manual Reference	Manual 14G	Manual 14G	Manual 14E	Manual 14E	Manual 14E	Manual 2
Interconnection Queue Entry	OATT Attachment N, Y, BB	OATT Attachment N	OATT Attachment S	OATT Attachment EE	OATT Attachment EE	OATT Attachment FF
Interconnection Studies	Feasibility, System Impact, Facilities or Combined Feasibility/System Impact	Feasibility, System Impact, Facilities	Feasibility, System Impact, Facilities	System Impact, Facilities	Market Requirements, Feasibility, System Impact, Facilities	Feasibility, System Impact, Facilities
Agreements	ISA IISA ICSA WMPA	ISA IISA ICSA WMPA	ISA, ICSA, UCSA	UCSA	UCSA	UCSA (for construction), TSA (for point-to-point), NITSA (for Network Integrated)

Agreement	Description
ISA	Interconnection Service Agreement
IISA	Interim Interconnection Service Agreement
ICSA	Interconnection Construction Service Agreement
NITSA	Network Integration Transmission Service Agreement
TSA	Transmission Service Agreement
WMPA	Wholesale Market Participation Agreement

1.4 Interconnection Procedures for FERC Jurisdictional Facilities and Non-FERC Jurisdictional Facilities

In accordance with the Tariff, a Developer of a generator interconnecting to the in the PJM region to be designated, in whole or in part, as a Capacity Resource or Energy Resource, must enter the generator into the PJM New Services Queue. However, the applicability of the Tariff interconnection process for a wholesale generator interconnecting to distribution facilities varies depending on whether FERC has jurisdiction over the distribution facilities.

The PJM Tariff provides interconnection procedures for generation resources connecting to FERC-jurisdictional facilities. This Section 1.4 applies only to wholesale transactions on non-FERC jurisdictional facilities that are not interconnections to municipal utilities, cooperatives, or non-PJM Transmission Owners member distribution company that are not subject to PJM's Tariff. See Section 1.5 for information regarding interconnections to municipal utilities, cooperatives or non-PJM Transmission Owners' member distribution companies.

If a generation resource that desires to be designated, in whole or in part, as a Capacity Resource or Energy Resource is proposing to interconnect to facilities that are not under FERC's jurisdiction (except those entities described in Section 1.5), PJM must still complete studies to verify no impacts to the PJM system. The generation resource owner will be required to enter the non-FERC jurisdictional entity's interconnection process in parallel to PJM's New Services Queue.

1.5 Interconnections with municipalities, co-operatives, or non-PJM Transmission Owner member distribution companies

A Generation Owner seeking to be designated, in whole or in part, as a Capacity Resource or Energy Resource, by connecting to any municipality, co-operative, or non-PJM Transmission Owner member distribution company that are not jurisdictional to PJM's Tariff, must work independently with that non-FERC jurisdictional entity to obtain permission to interconnect to and wheel through their system, or to build a dedicated attachment line through the affected system to the PJM System. If a non-FERC jurisdictional entity allows wheeling for wholesale activity, then it is up to that entity to follow all FERC requirements that wholesale wheeling requires.

Additionally, the Developer must enter the PJM New Services Queue. The Point of Interconnection for requests to non-FERC jurisdictional entities is where the non-FERC jurisdictional entity's system connects to PJM member facilities. PJM will study the generation impacts at the Point of Interconnection for reinforcement to the PJM system. During the same time that PJM is conducting its study, the customer may need to separately enter the necessary non-FERC jurisdictional entity's interconnection queue process in order to obtain a right to connect the new facility to the non-FERC jurisdictional entity's system. PJM will perform necessary studies to identify and mitigate any impacts to the PJM system. Upon completion of PJM studies, PJM will issue a Wholesale Market Participation Agreement (WMPA) with appropriate milestones for the Developer to complete the non-FERC jurisdictional entity's interconnection process, commence construction, and commence commercial operations within reasonable time periods. The WMPA will permit the Developer to participate in PJM's wholesale market after completing the non-FERC jurisdictional entity's interconnection process and commencement of generation transactions.

Failure to timely enter and maintain active queue status the non-FERC jurisdictional entity's interconnection process, if required, will result in withdrawal from the PJM queue. Failure to meet the milestones in the WMPA will result in termination of the WMPA. Failure to participate in the wholesale market after becoming commercial will result in termination of the WMPA.

1.6 Behind the Meter Generation

Any Behind the Meter Generation which seeks to be designated in whole or in part as an energy or capacity resource must submit a Generation Interconnection Request for the portion of the

unit's output that will participate in the PJM market. Further, sites with 10 MW or more must abide by PJM metering requirements as well as market, operational and settlement requirements. Manual 14D (Appendix A) describes the treatment of Behind the Meter generation, provisions for which are captured in PJM's Tariff, Subpart A, Section 36.1.A.

As with any other Interconnection Request, The Developer will be assigned a Project Manager for each process phase captured in Exhibit 1. The Project Manager will be responsible for working with each Developer and staff to complete the respective steps for that particular phase. Attachment B: Interconnection Process Team Role Clarity Diagram captures Implementation Team roles for each interconnection process phase (including a PJM Project Manager for each phase) and shows how each Manual aligns with each phase.

Generating resources operating "behind the meter," in isolation from the PJM bulk power transmission system and which do not intend to participate in the PJM wholesale energy market, need only coordinate planning, construction and/or operation with the host Transmission Owner.

Behind the Meter Generation (BtMG) is the output from generation that offsets load and does not and cannot participate in the wholesale market. Thus, in order to be considered BtMG, power claimed as BtMG must deliver energy to load without using the Transmission System or any distribution facilities (unless the entity that owns or leases the distribution facilities has consented to such use of the distribution facilities and such consent has been demonstrated to the satisfaction of PJM).

Generation claimed as BtMG cannot participate in the PJM Capacity or energy market. Even if partial BtMG is proposed, the portion claimed as BtMG must always stay behind the meter unless and until the generator takes the steps required to have the generation participate in the wholesale markets.

Behind the Meter Generation cannot include (i) at any time, any portion of such generating unit(s)' capacity that is designated as a Generation Capacity Resource; or (ii) in any hour, any portion of the output of the generating unit(s) that is sold to another entity for consumption at another electrical location or into the PJM Interchange Energy Market. Behind the Meter Generation rules permit load serving entities in PJM to net operating Behind the Meter Generation against load in the calculation of charges for energy, capacity, transmission service, ancillary services and PJM administrative fees. This total netting approach is intended to encourage the use of Behind the Meter Generation during times of scarcity and high prices, thus increasing the opportunity for load to compete in PJM markets.

A professional engineer stamped one-line configuration must be provided to show the relationship between equipment that prevents behind the meter power flow to the system, past the Point of Interconnection meter (in the case of Non-Retail BtMG, equipment must prevent BTMG power flow onto the Transmission System). Additionally, the affected entity must be aware and have performed the necessary studies to assure adequate system capabilities and protections are in place for the receipt of the power.

1.6.1 BtMG Interconnection Requests

Any Behind the Meter Generation that desires to be designated, in whole or in part, as a Capacity Resource or Energy Resource must submit a Generation Interconnection Request. (Tariff at Part VI, in Section 36.1.01 – formerly Subpart A at 36.1A, in Part IV)

The New Services Request shall include (1) the type and size of the load located (or to be located) at the site of the generation facility; (2) a description of the electrical connections between the generation facility and the load; and (3) the amount of the facility's generating capacity for which the Interconnection Customer seeks Capacity Interconnection Rights or that will be an Energy Resource.

The behind the meter load is the sum of station service and auxiliary loads used to support operation of the facility and any host/process loads to be served behind the point of interconnection. The behind the meter load provided in the New Services Request shall be the sum of the station service and auxiliary loads and the maximum host/process loads to be served behind the point of interconnection.

Station service and auxiliary loads used to support operation of the facility should be commensurate with those experienced coincident with the most recent 15 years PJM summer peaks (i.e. under summer conditions) in accordance with Manual 21: Rules and Procedures for Determination of Generation Capability, Section 1.2.

For new host/process loads to be served behind the point of interconnection, the maximum hourly integrated host/process load is to be estimated. For existing host/process loads, the maximum hourly integrated host/process load that occurred during the most recent 36 months is to be determined.

The Maximum Facility Output requested in the New Services Request is the gross generator output less station service and auxiliary loads less the minimum host/process loads that the facility is expected to serve. Of the Maximum Facility Output, the MW of capability requested to be designated as Energy Resource and MW of capability requested to be designated as Generation Capacity Resource (i.e., Capacity Interconnection Rights) is to be provided in the New Services Request.

The Capacity Interconnection Rights requested in the New Services Request are to be determined in accordance with Manual 21: Rules and Procedures for Determination of Generation Capability, Section 1.1. The Capacity Interconnection Rights requested in the New Services Request may not be greater than the gross generator output of the facility less station service and auxiliary loads less the maximum host/process loads that the facility is expected to serve.

1.6.2 BtMG Metering

Behind the meter generation consisting of one or more generating units individually rated at ten megawatts or greater or that otherwise have been identified by PJM as requiring metering for

operational security reasons must have both revenue quality metering and telemetry equipment for operational security purposes. Behind the meter generation consisting of multiple generating units that are individually rated less than ten megawatts but together total more than ten megawatts at a single site and are identified by PJM as requiring revenue quality metering and telemetry equipment may meet these metering requirements by being metered as a single unit. (Operating Agreement, Section 14.5)

1.6.3 BtMG Effects on Market Operations

Market Buyers shall be charged for all load and associated ancillary services based on the Market Buyer's total load (net of operating Behind the Meter Generation, but not to be less than zero.) (Operating Agreement, Schedule 1)

1.6.4 Non-Retail BtMG

Non-Retail BtMG refers to state interconnected generators that reduce the load of an electric distribution company, electric co-operative or municipality utility. The Generation Owner in this case does not request this status. The request for Non-Retail BTMG status must come for the affected electric distribution utility, electric cooperative or municipal utility, whose transmission served load requirements are being impacted.

Non-Retail BtMG rules permit load serving entities in PJM to net operating BtMG against load in the calculation of charges for energy, capacity, transmission service, ancillary services and PJM administrative fees. This total netting approach is intended to encourage the use of BtMG during times of scarcity and high prices, thus increasing the opportunity for load to compete in PJM markets.

1.7 Demand Response

An On-Site Generator used to reduce load that participates in wholesale markets as a Demand Response resource should see Manual 11 and Manual 18 for details. A portion of a Generator that may inject power past the point of interconnection must go through the interconnection process to participate in wholesale market(s) as outlined in this manual.

1.8 Service below Generating Capability

An Interconnection Customer may request interconnection service below the full electrical generating capability of their Generating Facility. PJM studies such requests at the level of interconnection service requested for purposes of determining Interconnection Facilities, Network Upgrades, and associated costs. However, PJM, in conjunction with the affected Transmission Owner(s), may perform additional studies at the full electrical generating capability of the Generating Facility, to ensure the safety and reliability of the system. The Interconnection Customer shall be responsible for the costs of any required additional studies. If after additional studies are complete, PJM or the affected Transmission Owner(s) determines that additional

Network Upgrades are necessary, then PJM Shall (i) specify which additional Network Upgrade costs are based on which studies; and (ii) provide a detailed explanation of why the additional Network Upgrades are necessary. Any Interconnection Facility and/or Network Upgrades costs required for safety and reliability also will be borne by the Interconnection Customer.

In addition, the Interconnection Customers may be subject to additional control technologies as well as requirements for testing and validation of these technologies. The requirements for the necessary control technologies and protection systems shall be outlined in the Interconnection Service Agreement, Schedule K (Requirements for Interconnection Service below Full Electrical Generating Capability) of the respective queue project.

1.9 Surplus Interconnection Service

Effective November 17, 2020, PJM will begin accepting requests to utilize Surplus Interconnection Service.

Surplus Interconnection Service refers to any unused portion of the Interconnection Service established in an ISA, such that if the service is used, the total amount of Interconnection Service at the Point of Interconnection would remain the same. Surplus Interconnection Service requests can be made by an existing Interconnection Customer whose Generating Facility is already interconnected to the PJM transmission system, one of its affiliates, or by an unaffiliated third party. The existing Interconnection Customer or one of its affiliates has priority to use this service; however, if they do not exercise this priority, Surplus Interconnection Service also may be made available to an unaffiliated Surplus Interconnection Customer with written permission from the existing Generating Facility owner.

Surplus Interconnection Service is limited to utilizing or transferring an existing Generating Facility's Surplus Interconnection Service at the pre-existing Point of Interconnection of the existing Generating Facility and cannot exceed the existing Generating Facility's total amount of Interconnection Service, i.e., the total amount of Interconnection Service used by the Generating Facility requesting Surplus Interconnection Service and the existing Generating Facility shall not exceed the lesser of the Maximum Facility Output stated in the existing Generating Facility's Interconnection Service Agreement or the total "as-built capability" of the existing Generating Facility. If the Generating Facility requests Surplus Interconnection Service associated with an existing Generating Facility that is an Energy Resource, the Generating Facility requesting the Surplus Interconnection Service shall be an Energy Resource; and if the existing Generating Facility is a Capacity Resource, the Generating Facility requesting Surplus Interconnection Service associated with the Generating Facility may be an Energy Resource or a Capacity Resource (but only up to the amount of Capacity Interconnection Rights Granted to the existing Generating Facility).

The diagram below is an example illustrating Surplus Interconnection Service:

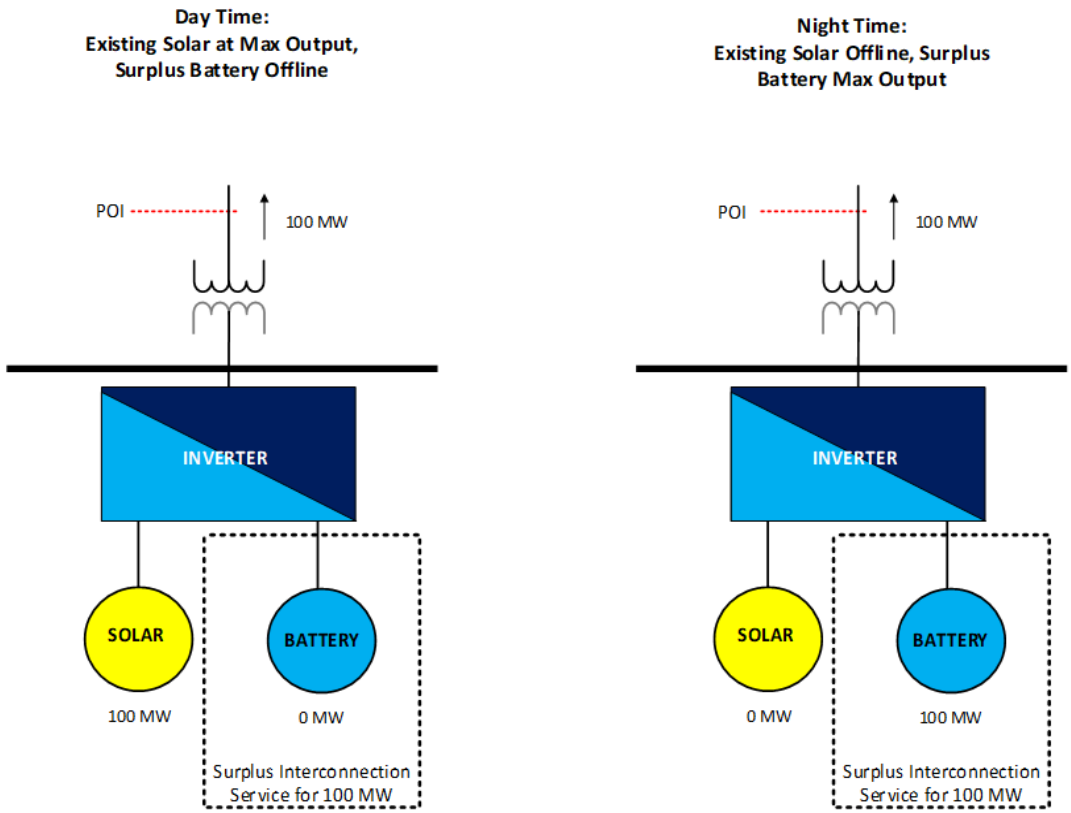

Exhibit 1: Surplus Interconnection Service Example

In Exhibit 1 above, a 100 MW battery storage surplus unit is added to an existing 100 MW solar generating Facility. The existing solar unit operates during the day only, while the battery operates at night when the solar unit's output is negligible. However, the net output at the POI never exceeds the Maximum Facility Output of the Solar generating unit as captured in the facilities ISA (100 MW).

During day time operations, illustrated by the diagram on the left, the solar unit is online and the output is 100 MW, while the battery unit is offline. The net output at the POI is 100MW. During night time operations, illustrated by the diagram on the right, the solar unit is offline, while the battery is online at its maximum output, 100 MW. The net output at the POI is still 100 MW.

In the example above, Surplus Interconnection Service is not available to a surplus battery unit that is capable of charging from the grid. The ability to charge from the grid automatically disqualifies the battery unit from eligibility for Surplus Interconnection Service, since the addition of an unstudied load would have material impacts on the PJM system.

In order for Surplus Interconnection Request to be approved, the following criteria must be met:

(i) There are no new network upgrades required to accommodate the request.

(ii) There are no impacts affecting the determination of what upgrades are necessary for the New Service Customers in the New Service Queue.

(iii) There are no material impacts on the transmission system with regards to short circuit capability limits, steady-state thermal and voltage limits or dynamic system stability response.

Examples of request that may be eligible for Surplus Interconnection Service (due to no expected material impacts) include:

- Adding a DC-coupled battery storage surplus unit that is not charging from the grid to an existing solar or wind facility
- Adding a DC-coupled solar unit to an existing battery storage facility

Examples of requests that may not be eligible for Surplus Interconnection Service (due to expected material impacts) include:

- Adding an AC-coupled battery storage surplus unit that is charging from the grid to an existing wind or solar facility
- Adding a battery storage, wind or solar surplus unit to an existing Synchronous generating facility
- Adding a synchronous surplus unit that operates in parallel with an existing Synchronous Generating Facility

Ultimately, all Surplus Interconnection Requests will need to be studied in order to confirm that all the criteria for Surplus Interconnection Service are met.

1.9.1 Surplus Interconnection Request Process

The Surplus Interconnection Request Process is summarized in the process flow diagram below and discussed in the following sub-sections.

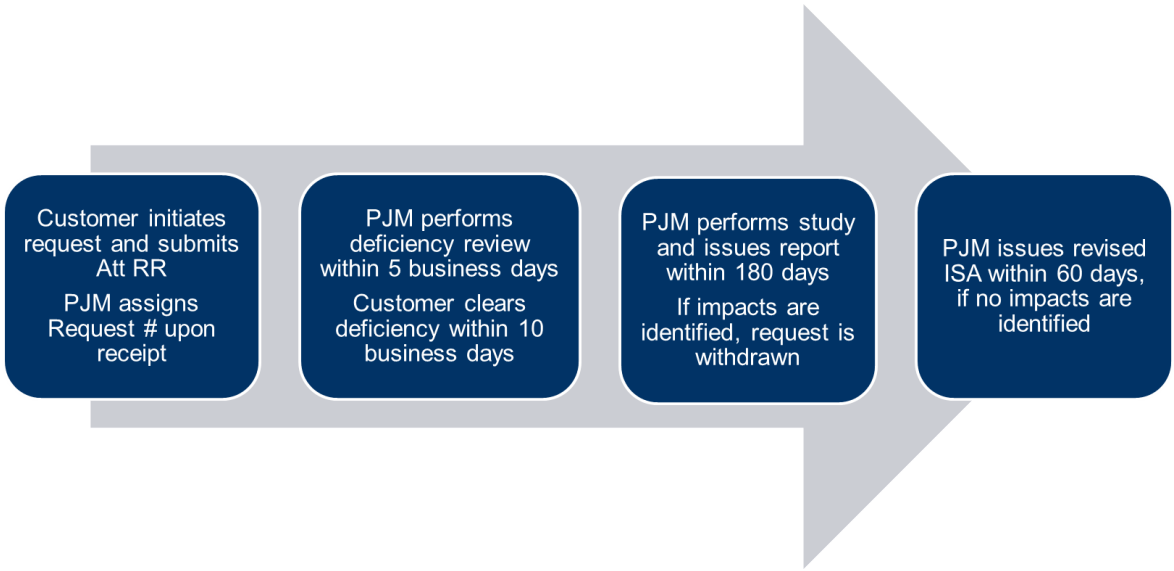

Exhibit 2: Surplus Interconnection Request Process

1.9.1.1 Initiating a Surplus Interconnection Request

In order to initiate a Surplus Interconnection Request, the Surplus Interconnection Customer must submit a complete and executed Attachment RR - Form of Surplus Interconnection Study Agreement and provide the required data via the Queue Point tool. Queue Point is a module within PJM's Planning Center tool which allows customers to enter data which is used to conduct various studies in order to identify any enhancements to the transmission system that are needed to maintain grid reliability while accommodating the Surplus Interconnection Service. The tool is available on the PJM Website along with a user guide at the following link:

https://pjm.com/planning/services-requests/new-service-requests.aspx

Attachment RR Requirements

In order to have a valid Surplus Interconnection Request, the completed and executed Attachment RR must be accompanied by the appropriate deposit and the submission shall include at a minimum the information listed below:

- Identification of the existing Generating Facility already interconnected to the PJM system.
- A description of the project location including street address and global positioning coordinates
- A map depicting the property boundaries and the proposed surplus generation facilities location(s)

- The megawatt capability of the proposed surplus generating unit or the amount of increase in capability of an existing surplus generating unit (Maximum Facility Output in MW and, if desired, the amount of MW to be evaluated as a Capacity Resource)
- Fuel type(s) of surplus generating unit
- One line diagram showing proposed equipment configuration
- Data as required to complete the study (refer to Attachment G-2 of this manual)
- Primary frequency response operating range for the surplus generating unit (for Energy Storage Units only)
- Proof of right to control the site for the proposed project for a minimum of three years. Refer to Manual 14G Section 2.4 for additional site control requirements.
- Anticipated in-service date
- A description of the circumstances under which Surplus Interconnection Service will be available at the existing Generating Facility's POI
- Required deposit ($10,000 plus $100 per MW but not to exceed $110,000). Any unused portion of the refundable deposit will be returned to the Surplus Interconnection Customer if the request is withdrawn, terminated or upon completion of the surplus interconnection process.
- Identification of the existing Generating Facility providing Surplus Interconnection Service, including documentation of the relationship between the Surplus Interconnection Customer and the existing Generating Facility owner
    - If the Surplus Interconnection Customer is not the same entity as the owner of the existing Generating Facility, the following must be provided:
        1. Written permission from the owner of the existing Generating Facility to use the unused portion of the existing Interconnection Service
        2. Written documentation stating that the owner of the surplus generating unit and the owner of the existing Generating Facility will have entered into a shared facilities agreement detailing their respective roles and responsibilities relative to the Surplus Interconnection Service prior to the owner of the existing Generating Facility executing a revised Interconnection Service Agreement
- Any additional information prescribed by PJM

A Surplus Interconnection Request number is assigned once all the requisite information and deposit is provided to PJM. Assignment of the Surplus Interconnection Request number does not mean that the request is valid.

1.9.1.2 Surplus Interconnection Request Deficiency Review

Surplus Interconnection Request validity is determined by a deficiency review. If the Surplus Interconnection Request is missing information, is deficient, or if the Surplus Interconnection Customer owes money from prior New Service Requests, PJM will issue a deficiency notification to the Surplus Interconnection Customer within five (5) business days or as soon as

practicable. Upon PJM issuing the deficiency notification, the Surplus Interconnection Customer has 10 business days to provide the missing/deficient information and/or money. PJM is afforded an additional five (5) business days to review each Surplus Interconnection Customer's deficiency notification response. PJM's additional five (5) business day review period runs concurrently with the Interconnection Customer's ten (10) business day deficiency response period. If the Surplus Interconnection Customer does not clear all identified deficiencies within 10 business days, the Surplus Interconnection Request shall be terminated and withdrawn.

The Surplus Interconnection Request shall be considered valid as of the date and time PJM receives from the Surplus Interconnection Customer the last piece of required information and/ or monies deemed acceptable by PJM to clear such deficiency notice.

1.9.1.3 Surplus Interconnection Study

After receiving a valid Surplus Interconnection request, PJM, in collaboration with the Transmission Owner, conducts a surplus interconnection study. Prior to the commencement of the study, PJM may have a scoping meeting with the Surplus Interconnection Customer to discuss the Surplus Interconnection Request.

The surplus interconnection study scope consists of reactive power, short circuit/ fault duty, stability, steady-state (thermal/voltage) analyses and any other studies deemed appropriate by PJM. PJM will use reasonable efforts to complete the study within one hundred and eighty (180) days of determination of a valid surplus request. In the event that PJM is unable to complete the study in the specified timeframe, PJM will notify the Surplus Interconnection Customer of the estimated completion date and the reason why additional time is required.

Upon completion of the surplus interconnection study, PJM will issue the surplus interconnection study report to the Surplus Interconnection Customer.

1.9.1.4 Agreement for Surplus Interconnection Requests

Within 60 days of issuing the surplus interconnection study report, PJM will issue a revised Interconnection Service Agreement to the owner of the existing Generating Facility, if the study results indicate that all the criteria for Surplus Service have been met. However, if the study results indicate all the criteria have not been met, then the Surplus Interconnection Request will be terminated and withdrawn upon issuing the surplus interconnection study report.

Within 60 days of receipt of the revised ISA, the owner of the existing Generating Facility will execute the revised ISA, request dispute resolution, or request that the revised ISA be filed unexecuted in accordance with Tariff Section 212.4. Failure to meet the requirements of Tariff Section 212.4 will result in termination and withdrawal of the Surplus Interconnection Request.

1.9.2 Deactivation of Existing Generating Facility Providing Surplus Interconnection Service

Surplus Interconnection Service cannot be offered if the existing Generating Facility providing Surplus Interconnection Service deactivates or submits a notice to deactivate prior to the commercial operation of the surplus generating unit. However, an in-service Surplus generating facility may continue limited operation for up to one year after the deactivation of the existing Generating Facility if:

1. PJM has studied the unit for sole operation at the Point of Interconnection, and

2. the owner of the existing Generating Facility provides written consent for the Surplus Interconnection Customer to operate at or below the surplus generating unit's share of the existing Generating Facility's capability.

If the Surplus Interconnection Customer is unable to satisfy the conditions above, the revised Interconnection Service Agreement for the existing Generating Facility will be terminated.

Section 2: Entering the New Services Queue

In order for the Generator Interconnection Customer to initiate a New Services Request, they must follow the "Queue Point Application Process" discussed in Manual 14A, Sections 2.1 and 2.2. The Queue Point tool is available on the PJM Website along with a User Guide at the following link, a view of which can be seen in Exhibit 1 below:

https://www.pjm.com/planning/services-requests/new-service-requests.aspx

http://pjm.com/planning/rtep-development/expansion-plan-process.aspx

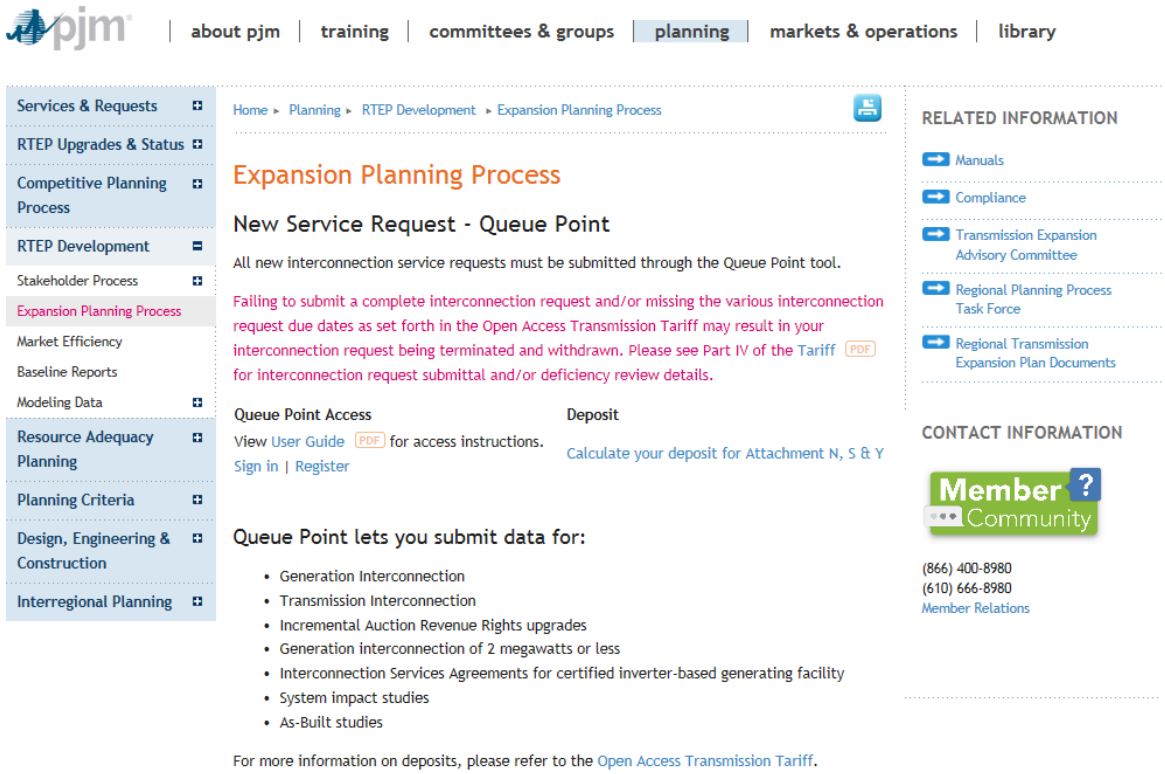

Exhibit 3: pjm.com New Services Request - Queue Point page

Completed Attachments, including the submittal of all required data, must be accompanied by the appropriate fees as detailed in Manual 14A, in order to reserve a place in PJM's New Services Queue.

The Queue Point wizard will help guide to determining the proper Attachment form for your New Services Request. You can also reference the Decision Tree in Exhibit 2 below.

Section 2 of this Manual identifies what information PJM requires on each Attachment for a Generator Interconnection Customer based on their customer type including the need for sufficient site control documentation.

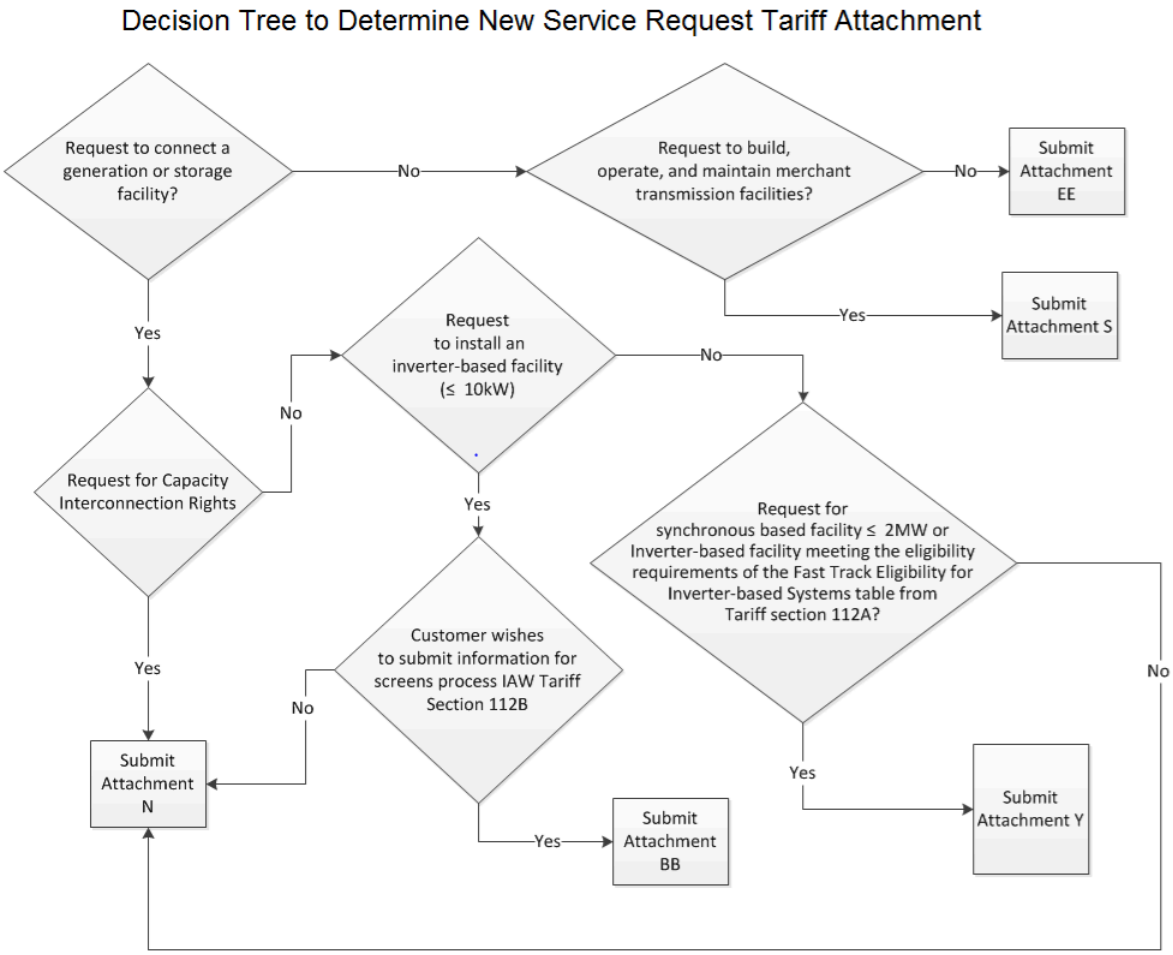

Exhibit 4: Decision Tree to Determine New Service Request Tariff Attachment

2.1 Attachment N Requests

As can be determined by Queue Point Wizard and Exhibit 2 of this manual, a New Service Request that is required to submit Attachment N shall include at a minimum the information listed below:

- A description of the project location including street address and global positioning coordinates
- A map depicting the property boundaries and the proposed generation facilities' location(s)

- The generator's capability (Maximum Facility Output in MW and, if desired, the amount of MW to be evaluated as a Capacity Resource)
- Fuel type(s) (e.g. natural gas, wind, solar etc.)
- One line diagram showing proposed equipment configuration
- Data as required to complete (refer to Attachments A and A-1 of this manual)
- Proof of right to control the site for the proposed project
- Anticipated in-service date

Note:
The in-service date must be no more than 7 years from the date the Interconnection Request is received by the Transmission Provider, unless it is demonstrated that engineering, permitting or construction of the project will exceed this period.

- The deposit based on the maximum of either the Capacity or Energy values requested. Deposit amounts are discussed in section 5.1 of this manual.

2.2 Attachment Y Requests

As can be determined by Queue Point Wizard and Exhibit 2 of this manual, a New Service Request that is required to submit an Attachment Y Form of Screens Process Interconnection Request which shall include at a minimum the information listed below:

- Interconnection Customer Information
- A description of the project location including street address and global positioning coordinates
- The generator's capability
- Proof of Certification of the generator and the generator's components
- Fuel type(s) (e.g. natural gas, wind, solar etc.)
- Anticipated in-service date
- Energy Resource Information as required in Attachment Y
- Energy Resource Characteristic Data (for inverter-based machines) as required in Attachment Y
- Deposit. Deposit amounts are shown in Table 5.3.1-3: Small Generation Interconnection Process deposit requirements (Interconnection Requests of 2MW or less) and Tables 5.3.1-1 and 5.3.1-2: Small Generation Interconnection Process deposit requirements (Interconnection requests of 2 – 20MW)
- Site control per Attachment Y, section 8

- Diagrams as required per Attachment Y, section 8. One-line diagram provided must be stamped by a Professional Engineer (PE) licensed in the state where the Generating Facility is located.

Attachment Y screens are only applicable to a FERC jurisdictional interconnection (refer to section 1.4). If an Attachment Y is received for an interconnection that is determined to be non-FERC jurisdictional, the Tariff processes cannot be used for interconnecting the proposed facilities, and the Tariff screens process does not apply. For non-jurisdictional requests, PJM will study for impacts to the Transmission System and, if there are no impacts, issue a wholesale market participation agreement within 90 days of the determination of a valid Interconnection Request. If it is determined that there are impacts to the Transmission System, the request will be processed per section 5.4 of this Manual 14G. It is up to the customer to meet the non-FERC entity's interconnection requirements.

For FERC jurisdictional requests, in order to be accepted and processed as an Attachment Y under the Tariff screens process, the proposed generation must meet the applicable Tariff output requirements and meet the certification requirements of Attachments Z and AA of the Tariff.

The Generation Interconnection Customer must provide an adequate one-line diagram and site plan for their generation facility. Demonstration of site control per Manual 14G Section 2.4 is also required in order to be considered a valid interconnection request.

Note:
Small Generation Interconnection Queue Submittal Requests submitted under Attachment Y are evaluated using a screens process as referenced in section 5.3.1 of this manual

2.3 Attachment BB Requests

As can be determined by Queue Point Wizard and Exhibit 2 of this manual, a New Service Request that is required to submit Attachment BB, Form of Interconnection Service Agreement for Certified Inverter-Based Generating Facility, shall include at a minimum the information listed below:

- Interconnection Customer Information
- A description of the project location including street address or global positioning coordinates
- The generator's capability
- Proof of Certification of the generator and the generator's components
- Fuel type(s) (e.g. natural gas, wind, solar etc.)
- Anticipated in-service date
- Small Inverter Facility Information

- Fees. There is a non-refundable processing fee of $500
- Site control documentation

Attachment BB applications are only applicable to a FERC jurisdictional interconnection (refer to Section 1.4). If an Attachment BB is received for an interconnection that is determined to be non-FERC jurisdictional, the Tariff processes cannot be used for interconnecting the proposed facilities, and the Tariff screens process does not apply. For non-jurisdictional requests, PJM will study for impacts to the Transmission System and issue a wholesale market participation agreement. It is up to the customer to meet the non-FERC entity's interconnection requirements.

For FERC jurisdictional requests, in order to be accepted and processed as an Attachment BB under the Tariff screens process, the proposed generation must meet the applicable Tariff output requirements and meet the certification requirements of Attachments Z and AA of the Tariff.

The Generation Interconnection Customer must provide an adequate one line diagram and site plan for their generation facility. Demonstration of site control per Manual 14G, Section 2.4 is also required in order to be considered a valid interconnection request.

2.4 Site Control

The Tariff states that a Developer must show evidence of site control; and site control is required for a project to have a valid queue position. The Tariff also provides PJM the authority to verify site control that is fully sufficient for the technology and MWs requested for a proposed Generating Facility. PJM ensures that Generation Interconnection Customers proposing facilities have adequate land to support the proposed generation facilities required to preserve the PJM system rights (MW Energy and MW Capacity) they seek to obtain through their queue request. Accepting a New Service Request for more MW capability than the site and/or proposed technology is capable of producing harms subsequently queued New Service Customers by reducing available system capability. PJM requires site control to be in the name of the party identified on the interconnection request or the parties must demonstrate to PJM's satisfaction the relationship between the owner with site control and the party requesting interconnection. The same requirement applies to Transmission Interconnection Requests initiated with Attachment S at the System Impact Study phase. Developers are prohibited from submitting evidence of site control of the same land for multiple queue positions unless the total size of such land is adequate to support all facilities contemplated by such queue positions. Although there is some flexibility as to what documents may be submitted to support site control requirements, site control evidence for the interconnection process typically demonstrates three key elements: conveyance, term, and exclusivity.

- Conveyance is demonstrated through a document retained by the Interconnection Customer that conveys the property to the Interconnection Customer (i.e. deed or lease) or guarantees the Interconnection Customer the right to future conveyance at Interconnection

Customer's sole discretion (i.e. option to lease or option to buy). A Memorandum of Understanding (MOU) or a Letter of Intent (LOI) to demonstrate conveyance is not sufficient since MOUs/LOIs do not contain firm and sole site control commitment or exclusivity, from the property owner to the Interconnection Customer.

- Term, the minimum duration required to evidence site control is based upon the anticipated duration of the study process for the relevant project, i.e., three years for large generation projects and two years for small generation projects. The durational requirement is directly tied to the expected time required to complete the Interconnection Process. In order to satisfy the minimum duration requirement for site control, the Interconnection Customer must submit evidence in the Interconnection Customer's name of an ownership interest in, or a right to acquire or control the Generating Facility site. Such evidence must be in the form of a deed, lease, option agreement or other similar document acceptable to the Transmission Provider, having a term that extends at least three years (for large generation projects) or two years (for small generation projects) past the first day of the New Services Queue in which the Interconnection Customer submits its Generation Interconnection Request. Evidence of such three-year term requirement or two-year term requirement, as applicable, cannot be satisfied by an agreement with an initial term shorter than the requisite three year term (or two year term) that has extensions, including unilateral extensions, unless those extensions have been exercised and any requisite conditions fulfilled, including any payment obligations, by the Interconnection Customer at the time evidence of site control is provided to the Transmission Provider.
- Exclusivity is evidenced by written acknowledgement from the property owner of the identified site that, for the term (which shall be, at a minimum, equal to the duration requirement) of the lease or option agreement, the property owner cannot make the identified site property available for purchase or lease to anyone other than the Interconnection Customer.

The evidence of ownership provided for site control must be from the same company name that is providing the New Service Request. The New Service Request agreement is between a specific customer and PJM and all documentation supporting the agreement must be in the same name as the customer identified in the New Service Request agreement. FERC Order 807 allows multiple projects to interconnect behind a Point of Interconnection. A shared facilities agreement is required if jointly owned common Attachment Facilities are proposed.

The Generation Interconnection Customer's site plan submitted with the Attachment N application must show the arrangement of the proposed facilities for the amount of MW requested. This is needed for all types of generation. In the case of solar generation, the determination of sufficient land to accommodate the proposed installation is an engineering analysis based on the capability of solar panels proposed, the solar panel arrangement, and the geographical site location. Similarly, land needed for a wind generation installation is also calculated based on the size and location of the wind turbine.

If PJM receives an interconnection request that does not provide a site plan of the proposed facilities along with accompanying information to determine adequate land space, the request will be deemed deficient by PJM. For example, an interconnection request received for a 25 MW solar installation on one acre of land is deficient because it is not technically feasible to produce that much output with that amount of land. In this case, PJM will ask that the customer provide evidence of the additional site control necessary to accommodate the full level of power output requested or require the customer to reduce the proposed output to match the site area. In the event of a disagreement between PJM and the Interconnection Customer, PJM will accept, a Professional Engineer (PE) stamped site plan drawing (licensed in the state of the facility location) that depicts the proposed generation arrangement and specified the Maximum Facility Output for that arrangement. Failure to take one of these measures will result in the queue request being terminated and withdrawn.

2.5 Multiple requests behind the same Point of Interconnection

PJM performs all studies at the Point of Interconnection (POI). Subdividing projects into separate projects behind the same POI does not avoid cost allocation requirements nor does it eliminate material impact review requirements based on the total MW being proposed at the POI.

If multiple queue requests are made behind a single POI, as long as they are made within the same queue, will be studied at the queue position of the latest queue request associated with the facility(ies) being proposed.

PJM understands Tariff rules may require an additional queue request to correct increases to Maximum Facility Output if the initial submittal was in error. As long as the total output at the POI does not exceed the applicable criteria for Tariff Part IV, Subpart G, PJM will treat the combined requests as a single submittal at the later queue position under the small generation process. If the combined MW output from the two requests exceeds the applicable criteria for Tariff Part IV, Subpart G, PJM will study the total output at the later queue position under the large generation process.

If multiple projects are behind the same POI, as indicated above, the cost responsibility will be determined based on the maximum combined power injected at the POI. Additionally, if one of multiple projects withdraws from the queue, the materiality requirements based on the withdrawal will apply to the remaining projects behind the POI. If material, the other queue positions will slide to the next queue.

2.6 Work Papers

The Tariff requires PJM to provide New Service Customers access to the applicable PJM base case data. Base case data is defined in Tariff 36.1.7 to only include upgrades and New Service Requests that are included in the RTEP. The customer requesting the PJM base case data

must first complete all necessary Critical Energy Infrastructure Information, Non-Disclosure Agreements and other requirements necessary to obtain the modeling information.

Upon completion of a study report, the Tariff provides that PJM will provide New Service Customers work papers upon request. Work papers are documents, data, and other information developed by PJM based on confidential documents, data or information from PJM Members or New Service Customers that were used in the development of each phase study and that PJM can make public upon completion of a study under the requirements of Operating Agreement 18.17. Generally, work papers include all files necessary for a customer to modify the base case and duplicate the results obtained by PJM in the queue studies. Other examples of work papers would be the initial and final limiting element and associated ratings used in a study. Since a new service customer is paying for upgrades, they are entitled to the rating of the limiting element as rating information is important to determining the financial rights that may be awarded. Work papers also can include information used to develop an upgrade cost. However, if an upgrade cost was developed using a deskside estimate, no additional detail is required to be generated. For example, if a reconductor was required for a five mile line and was estimated based on past experience to cost about $1M/mile, no further cost detail is required to be created. Work papers do not include documents, data or information desired by an entity that were not created by PJM or were not used in the production of a study.

Section 3: Reports and Agreements

After a valid Generator Interconnection request is received, the project will follow the New Services Request Study Timeline identified in **Manual 14A, Section 4.1. Manual 14A, Section 4** for the "New Services Request Study Process" outlines the Feasibility, Impact and Interconnection Facilities Studies that the Generator Interconnection Customer will receive.

In order to proceed from one study phase to the next, completed Attachments, including the submittal of all required data, must be accompanied by the appropriate fees as detailed in Manual 14A, in order to reserve a place in PJM's New Services Queue. The data required for both the Feasibility Study and System Impact Study must be provided to PJM via the Queue Point system.

Feasibility Study: Attachment A of this Manual identifies the generator's requirements for the Feasibility Study which is the first phase of the study process. Attachment A-1 is the Feasibility Study Data Form.

System Impact Study: Attachment B of this Manual identifies the generator's requirements for the System Impact Study phase. The customer is required to provide3 Dynamic Model Data using the form in Attachment B-1 and System Impact Study Data using the form in Attachment B-2.

Manual 14A, Section 5 describes the types of agreements tendered by PJM to New Services Customers. The following agreements are applicable to Generator Interconnection Customer projects:

- Feasibility Study Agreement
- System Impact Study Agreement
- Facilities Study Agreement
- Interconnection Service Agreement
- Interconnection Construction Service Agreement
- Wholesale Market Participation Agreement

Section 4: Generator Interconnection Requirements, Rights and Obligations

Section 4 identifies requirements, rights and obligations for generators that desire to participate in the Capacity market. This section will provide the generator with guidance on electing Capacity Resource or Energy Resource status and the transferring of Capacity rights. This section also addresses how PJM handles changes to existing or proposed generation and multiple requests behind the same Point of Interconnection.

4.1 Requirements for Generating Units

Under the definition of Generation Capacity Resource in the PJM Open Access Transmission Tariff (Tariff) and Reliability Assurance Agreement (RAA), Capacity Interconnection Rights are awarded to a generation unit. While some technologies, such a wind, solar, hydro, and combined cycle facilities may participate in the Capacity Market through the aggregation of multiple generating units (see, for example, the Capacity market participation requirements in PJM Manual 21), PJM must be able to model each machine that can participate as a generator in its planning process. Moreover, in accordance with the PJM Tariff, for any Behind the Meter Generation that desires to be designated, in whole or in part, as a Capacity Resource or Energy Resource, PJM must study and demonstrate that Behind the Meter Generation qualify as such Behind the Meter Generation. To allow PJM to study and demonstrate that Behind the Meter Generation cannot inject power past the Point of Interconnection, generation that contains both: (1) Behind the Meter Generation; and (2) generation interconnected or interconnecting the transmission system or FERC-jurisdictional distribution system in the PJM region must provide PJM with all generation gross capability.

If a generating facility is to be subdivided between separate business entities behind a single Point of Interconnection, each entity shall own its own revenue grade meter or must enter into a commercial agreement, which governs disbursement from a single payment. Regardless, at least one revenue grade meter, to be defined as the meter of record, must be installed at the Point of Interconnection. If individual revenue grade meters are installed in addition to the meter of record, they will provide each participant their percentage of the meter of record. It will be required of the behind the Point of Interconnection parties to submit to PJM hourly MW totals by entity equal to the total of the meter of record.

4.2 Generator Power Factor Requirements

Except as PJM may determine otherwise for small generation resources of 20 MW or less, all generators interconnected with the PJM System shall be designed to maintain a composite power delivery at continuous rated power output and reactive capability, at the generator

terminal, corresponding to the power factor requirements stated in the Tariff. (Tariff at Part VI, Att. O, App. 2, Section 4.7.1 – formerly 54.7.1 in Part IV)

4.2.1 Application of Power Factor Requirements to Increases of Existing Generation

Tariff provisions require existing generators to be designed to operate at a specified leading and lagging power factor as measured at the generator terminals.

- Power Factor requirements also apply to capacity or energy increases to existing generation. (Tariff at Part VI, Att. O, App. 2, Section 4.7.1.2)

Increases to existing generators must be designed to maintain the grandfathered Mvar capability for the existing and pre-upgraded gross generator output capability and the Section 4.7.1.2 power factor requirement for all incremental MW increases.

Grandfathered Mvar capability will be determined using the following methodology and considerations.

- If an agreement exists and contains a reference to required Mvar capability, the methodology in the agreement will determine the grandfathered Mvar capability.
- Consideration will be given to the potential interpretations of the language in the agreement. Non-standard or vague terms and conditions will be discussed by PJM and the parties named in the agreement.
- If no agreement exists or there is no reference to required Mvar capability in an existing agreement, PJM will use alternate methods to determine the grandfathered Mvar capability of the machine.
- Examples of potential alternate methods that may be used at PJM's discretion.
- Use of the D-Curve provided by the manufacturer and is on file with PJM.
- Review of the data with the GO and provide an opportunity for the GO provide additional analytical evidence as to the actual Mvar capability, if different from the manufacturer design data.
- Consideration of available test data with acknowledgement that tests are not always performed under ideal conditions and the system may limit the capability during testing. Input from the GO will also be considered as part of the evaluation by PJM.
- Consideration of historical operational data.

Attachment H to this Manual 14A details a process, adhering to the requirements of the PJM Tariff, to mitigate the reactive deficiency arising when an increase of capacity or energy to an existing generator results in the generator not being able to meet the PJM power factor requirements for the existing and/or incremental capacity or energy.

4.3 Electing Capacity Resource Status versus Energy Resource Status

A Developer must elect the status type for the generating capability associated with each interconnection request: Capacity Resource Status or Energy Resource Status. A Capacity Resource status designation permits the generator to be utilized by PJM Load Serving Entities to meet capacity obligations under the terms of the PJM Reliability Assurance Agreement (RAA), available in the Library section of PJM's website.

- ***Capacity Resource Status*:** Units must meet certain interconnection requirements for being granted this status including requirements for deliverability. Capacity Resource status is granted based on the availability of sufficient transmission capability to ensure the deliverability of generator output to network load and to satisfy the regional reliability requirements of the NERC region in which the generator is located - ReliabilityFirst or SERC. Specific analytical tests performed during the Generation Interconnection Feasibility Study and System Impact Study reveal the specific transmission system upgrades required to meet these reliability criteria. Capacity Resource Status conveys specific capacity interconnection rights enabling a unit to participate in PJM capacity markets. Through these markets, LSEs may procure capacity rights to meet their respective capacity obligations under the terms of the PJM Reliability Assurance Agreement.
- ***Energy Resource Status*:** The planning studies for generating units seeking this status do not include the deliverability analyses required of those units seeking Capacity Resource status. As such, Energy Resource units are only permitted to participate in the energy market. Such units do not receive Capacity Interconnection Rights and may not participate in PJM Capacity markets.

4.4 Transfer of Capacity Interconnection Rights

4.4.1 Transfer of Capacity Interconnection Rights (CIRs)

In order for the holder of Capacity Interconnection Rights to transfer rights under Tariff section 230, the holder of the rights must have completed the following:

- constructed all necessary system upgrades identified in the ISA or WMPA, and
- maintained the rights as required by the Tariff.

4.4.1.1 Transfer of CIRs Prior to commercial operation

CIRs under study or CIRs from an ISA that are associated with a facility or unit(s) which has not become commercial are non-transferrable. In these cases, the owner of the queue position can sell, or assign the queue project to another entity.

4.4.1.2 Transfer of CIRs from an Operating Unit

For existing Capacity Resources that wish to transfer CIRs and that meet the requirements identified above, a letter to PJM must be provided by the assignor of the rights indicating the

transfer amount and to whom the rights are transferring. If the rights are not being transferred at the same Point of Interconnection, then the rights will be transferred through studies performed by PJM that will determine the total CIRs available at the new location. The assignee of the rights must be able to meet all Tariff operating requirements. A new queue position is required for PJM to verify that the unit receiving the rights is capable of meeting all requirements (e.g. power factor) at the new CIR level.

4.4.1.3 Transfer of CIRs from a deactivated unit

If the owner of an existing unit that is to be deactivated wants to transfer their rights to a new unit, they must submit a new queue request within one year of deactivation. Failure to submit a new queue request within one year of the deactivation will result in the loss of the CIRs. If the CIRs are transferred to another owner, a letter to PJM must be provided by the assignor of the rights indicating the transfer amount and to whom the rights are transferring. A queue request from the assignee of the CIRs must be received within one year of the deactivation of the transferring unit. If the rights are not being transferred at the same Point of Interconnection, then the rights will be transferred through studies performed by PJM that will determine the total CIRs available at the new location.

4.4.2 CIR Transfer Process

The following processes will be followed to determine the amount of CIRs which can be transferred from an existing operational generator, to an existing or new resource in order to increase or provide CIRs to an existing or new resource. In all cases the transfer of rights will require that the customer or owner enter the New Services Queue with an Interconnection Request.

For the study of the transfer of CIRs as it affects thermal constraints, all load flow studies will be performed in the queue to which the rights are to be transferred up to the Queue Position immediately preceding the project which is seeking to receive the transferred rights (the generator from which the rights are to be transferred would be online during these studies). PJM will then turn off the generator with the existing rights, make the unit unavailable for dispatch, and then study the new Interconnection Request to determine the thermal impacts of the new Interconnection Request. This analysis will insure that any Capacity Interconnection Rights owned by the existing generator will be used by the new Interconnection Request.

For the Study of short circuit impacts to the system, studies will be performed in order to determine the impact on the increase in fault current for all facilities associated with any new Interconnection Request. Any reinforcement(s) which are determined to be required for the new generator will be reviewed to determine if the existing generator's contribution causes the need for the reinforcement, and if the reinforcement would not be required if the existing unit was removed from the study. The new Interconnection Request would not be required to provide reinforcement to the system if the new Interconnection Request does not cause the need for the reinforcement when the existing unit is removed.

For the study of stability impacts to the system, the existing generator would not be dispatched during the study of the new Interconnection Request.

4.5 Changes to Existing or Proposed Generation

An Interconnection Customer shall submit to PJM in writing, any modification to its project that causes the project's capacity, location, configuration or technology to differ from any corresponding information provided in the Interconnection Request. An existing or proposed generating unit may request changes which will require consideration under PJM's interconnection process.

- ***New Ownership Requirements:*** If a generating facility is acquired by a new owner, then the transfer of responsibilities and rights in the PJM market for the transferred facility will be conveyed to the new owner following notification to PJM by the selling and purchasing entities.
- ***Unit Output Increases:*** If a Generation Owner plans to increase the Maximum Facility Output (MFO) or the amount of Capacity Interconnection Rights (CIRs) of an existing generating unit or active Interconnection Request in the PJM study queue to a MW value greater than the amount already specified in a generating unit's existing ISA or active Interconnection Request, then that additional MFO or CIRs will be treated as a new generation Interconnection Request subject to the procedures discussed in Manual 14A. If a proposed generating unit increase is less than 20 MW, the Generation Owner may be eligible to follow the Small Generation Interconnection Process, set forth in Part IV, subpart G of the Tariff and discussed herein below. Maximum Facility Output (MFO) and Capacity Interconnection Rights (CIRs) are defined in Part I of the Tariff "Common Service Provisions, under "OATT Definitions".

If a Generation Owner changes the electrical characteristics of the existing generating unit(s) that were previously studied by PJM, but is not increasing the MFO or CIRs, then the Generation Owner must request that a necessary study be performed by PJM (See PJM Tariff Section 36.2A.4 and Attachment O, Appendix 2, Section 3.1). Even when not increasing MFO or CIRs, if a Generation Owner wishes to parallel generating units in excess of the number of units previously studied by PJM, this would change the electrical characteristic and require a necessary study prior to operating with additional generating units. If a Generation Owner installs a spare generating unit with different electrical characteristics than the primary generating unit, the spare generating unit must be studied with a necessary study prior to being paralleled with the system.

4.5.1 Changes to Existing Generators and Transmission Facilities

Transfer of ownership of existing generating units and transmission facilities is not subject to the interconnection queuing process unless pre-existing capacity interconnection rights for the unit are not transferred with the change in ownership.

Owners of existing generating plants that plan increases in a plant's output capability above that specified in the generating plant's existing ISA must follow the same procedure as new generation specified in the Tariff and the PJM Manuals. These projects will be placed into the interconnection queue and will be evaluated under the same study procedure as new generation.

Some changes, such as improvements to same-site units injecting at a common point, may be aggregated or combined. Such requests are determined on a case-by-case basis.

Owners of existing generating plants that plan to retire or reduce the plant's output capability must notify PJM in order to address capacity credit issues and any potential PJM System economic and/or reliability concerns. After a generator officially notifies PJM of retirement, system upgrades will be identified to resolve any reliability problems associated with the retirement. If the generator subsequently withdraws the request for retirement, PJM may continue to plan the system to accommodate retirement of the generator. The Capacity Interconnection Rights associated with the retired or reduced plant output capability may survive for up to one year following the actual Deactivation Date. **(PJM Tariff at Part VI, Section 230.3)**

Owners of existing Merchant Transmission Facilities that plan to retire or reduce the capability of a transmission facility must notify PJM in order to address any potential PJM System economic and/or reliability concerns.

4.5.2 Fuel Change

An Interconnection Request is for a specific project and includes the fuel type specified by the requestor on the interconnection request agreement. A change of fuel type for all or a portion of an existing interconnection request will require the Developer to submit a new interconnection request. For example, if a Developer would like to covert 20 MWs of a 100 MW solar facility to battery storage, then the first queue position for the solar project must be reduced by 20 MW and a new 20 MW interconnection request for the battery storage must be submitted. The rules for multiple queue requests behind the same Point of Interconnection apply.

4.5.3 Incorporation of Technological Advancements

Requests to modify an Interconnection Request to include a proposed technological advancement such as advancements to turbines, inverters, plant supervisory controls or other similar changes must be submitted to PJM prior to the execution of the Facilities Study Agreement (or, if a Facilities Study is not required, prior the return of an executed Interconnection Service Agreement). The machine modeling data associated with the requested technological change must be submitted via the Queue Point tool on the PJM website, along with the written request.

A Technological Advancement submitted to PJM no later than the return of an executed Facilities Study Agreement (or return of an executed ISA if a Facilities Study is not required) is classified as a Permissible Technological Advancement if the proposed change does not:

1. Increase the capability of the Generating Facility
2. Represent a different fuel type or
3. Cause any material adverse impact(s) on the Transmission System.

An Interconnection Customer may request to modify its Interconnection Request to include a Permissible Technological Advancement without losing its current Queue Position provided that the request and the associated machine modeling data are submitted no later than the return of the executed Facilities Study Agreement (or, if a Facilities Study is not required, prior to return of an executed Interconnection Service Agreement). If a proposed technological advancement is deemed a Permissible Technological Advancement, then the proposed change will not be considered a Material Modification and no additional PJM study will be required. All other proposed technological changes will require a study to determine if the change would constitute a Material Modification.

If a proposed technological advancement is not deemed a Permissible Technological Advancement, then PJM will perform a study to determine whether the proposed change would constitute a Material Modification. The Material Modification determination shall be made within thirty (30) calendar days of receipt of a valid technological advancement request. If modelling data provided with the technological advancement request is incomplete or incorrect, PJM will reject technological change request and notify the Interconnection Customer within 5 business days. The Interconnection customer may re-submit request with complete and accurate data. The technological advancement request shall be considered valid as of the date and time PJM receives from the Interconnection Customer the last piece of required information deemed acceptable by PJM.

The study will include an analysis of the short circuit capability limits, steady-state thermal and voltage limits, or dynamic system stability and response on subsequent queued Interconnection Requests. If PJM determines that the technological advancement is not a Material Modification, then the Interconnection Customer may modify its Interconnection Request to include the technological advancement. However, If PJM determines that the change is a Material Modification, then the Interconnection Customer must either withdraw its technological advancement change request to retain its current Queue Position, or proceed with a new Interconnection Request incorporating the proposed technological change.

The process for evaluating technological advancements is illustrated in Exhibit 5 below.

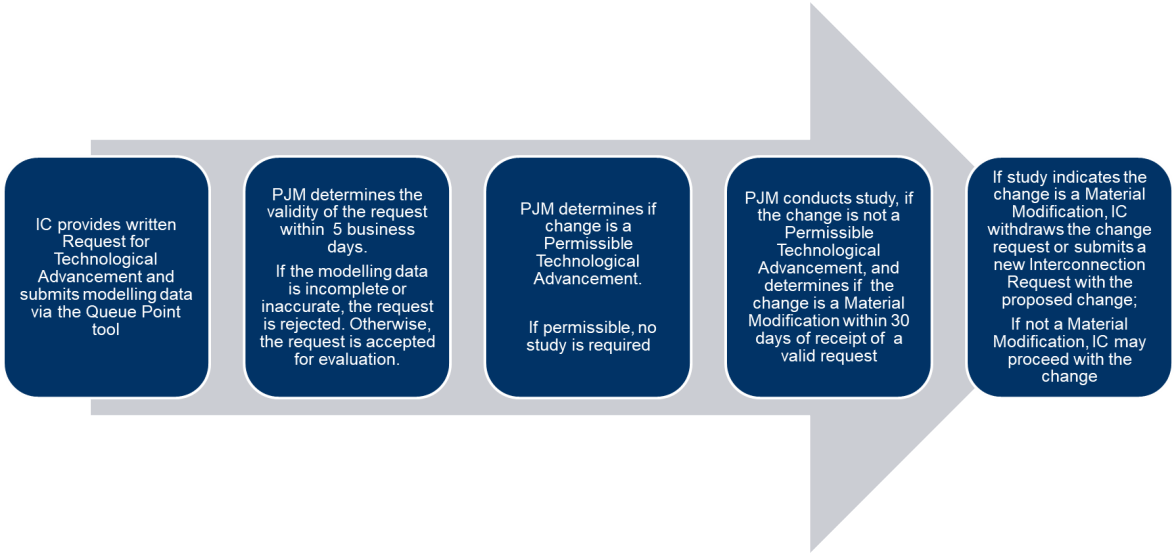

Exhibit 5: Process Flow for Evaluation of Technological Advancement Request

4.6 Multiple Requests Behind the Same Meter, including Interconnection Requests and Queue Position

PJM performs all studies at the Point of Interconnection (POI). Subdividing projects into separate projects behind the same POI does not avoid cost allocation requirements nor does it eliminate material impact review requirements based on the total MW being proposed at the POI.

If multiple queue requests are made behind a single POI, as long as they are made within the same queue, will be studied at the queue position of the latest queue request associated with the facility(ies) being proposed.

PJM understands Tariff rules may require an additional queue request to correct increases to Maximum Facility Output if the initial submittal was in error. As long as the total output at the POI does not exceed the applicable criteria for Tariff Part IV, Subpart G, PJM will treat the combined requests as a single submittal at the later queue position under the small generation process. If the combined MW output from the two requests exceeds the applicable criteria for Tariff Part IV, Subpart G, PJM will study the total output at the later queue position under the large generation process.

If multiple projects are behind the same POI, as indicated above, the cost responsibility will be determined based on the maximum combined power injected at the POI. Additionally, if one of multiple projects withdraws from the queue, the materiality requirements based on the

withdrawal will apply to the remaining projects behind the POI. If material, the other queue positions will slide to the next queue.

4.7 Wind and Non-Synchronous Generators

Because of the intermittent nature of wind-power and other non-synchronous generation, a specific procedure is required to determine an appropriate capacity value for these facilities.

4.7.1 Wind or Non-Synchronous Generation Capacity Credit Rules

PJM business rules allow for wind or non-synchronous generation projects to qualify for Capacity Resource status. Refer to PJM Manual 21 – "Rules and Procedures for Determination of Generating Capability" for details of PJM procedures for calculating Capacity Credits for these facilities.

4.7.2 Wind or Non-Synchronous Generation—Specific Technical Requirements

Without exception, all Customer Facilities will be subject to the provisions of the PJM **Tariff at Part VI, in Section 4.7.2 and Section 4.7.3 in Att. O, App. 2 – formerly 54.7.2** and **54.7.3 in Part IV,** which describes real-time obligations to supply reactive power and the consequences of deviations from voltage schedules and/or reactive power schedules.

4.8 Serving Load as a Generator

Unless allowed under applicable state or local law, an entity is not permitted to serve another entity's load. Station Power loads can be served between generators in a single portfolio.

4.9 Station Power

All electric generation facilities consume some electric energy, generally referred to as "station power" in their operations. Station power requirements can include, for example, energy used for re-starting generators after they have been shut down for maintenance or other reasons; for emissions control and related monitoring equipment; for pumping and treating cooling water; for fuel handling equipment; and for lighting, heating and air conditioning of plant control rooms and offices.

Station power is defined as energy consumed in the PJM control area by a generating facility or by equipment or facilities located at the site of a generation facility and used in the operation, maintenance, or repair of the generation facility, regardless of whether the facility is operating when the energy is consumed.

Generators may obtain station service from a local utility under retail tariffs or service agreements. Every generator in PJM's control area remains free (consistent with FERC policy) to purchase any or all of its station power from any seller connected to the grid.

Make certain your contracts or business arrangements for obtaining Station Power are in place before beginning generator operations.

Section 5: Small Generator Interconnection Requests

In Section 5 you will find:

- Study process for generation projects that are 20 MW or less as according to the PJM Tariff Part IV, Subpart G,
- Pre-application process,
- Study requirements and cost, and
- Combined study process.

5.1 Small Generation Interconnection Considerations (20 MW or less)

Requests for the interconnection of new resources of 20 MW or less, or for increases of 20 MW or less for existing generation may be processed through expedited procedures, in accordance with Part IV, Subpart G of the PJM Tariff. Generating resources of this size fall into one of three categories:

1. Permanent Capacity Additions: units which are expected to remain connected to the transmission system for the life of the resource, expect to receive capacity interconnection rights, and may be utilized to meet the capacity obligations of LSEs.
2. Permanent Energy Resource Additions: units which are expected to remain connected to the transmission system for the life of the resource but receive no Capacity Transmission Interconnection Rights and are not permitted to be used to meet capacity obligations of LSEs.
3. Temporary Energy Resource Additions: units which are only expected to remain connected to the transmission system temporarily (less than six months), participating in spot market activity during peak demand periods and requiring only minimal or no transmission enhancements.

The planning process requirements for each of these are described in more detail in Manual 14B.

5.1.1 Distributed Generation

Developers who are considering construction of generating facilities within PJM which are 20 MW or less may follow the Small Generator Interconnection process described above.

5.1.2 Small Generation Interconnection Queue Submittal

Requests for the interconnection of new resources which are 20 MW or less, or increases in capability of 20 MW or less to existing generation (over a 24 month period) may be processed through expedited procedures. (Refer to Part IV, Subpart G of the Tariff.) Expedited procedures are defined in the Tariff for five categories of these “very small resource” additions; permanent

Capacity Resource additions of 20 MW or less, permanent Energy Resource additions of 20 MW or less but greater than 2 MW (synchronous) or greater than 5 MW (inverter-based), temporary Energy Resource additions of 20 MW or less but greater than 2MW, permanent and temporary Energy Resource additions of 2 MW or less (synchronous) or 5 MW or less (inverter-based), and certified small inverter-based facility additions not greater than 10 kW.

5.2 Pre-Application Process

5.2.1 Pre-application Process for New Generation Resource Additions of 20 MW or Less or Additions to Existing Generation Resources Not to Exceed 20 MW in Aggregated Maximum Facility Output

The following projects may follow the pre-application process if selected by the potential Interconnection Customer:

- 20 MW or less and
- Connecting to FERC jurisdictional facilities

There are two options for the prospective Interconnection Customer gathering information:

- Informal request of PJM contact listed on PJM's website, where PJM contact will utilize existing interconnection studies to provide information or
- Formal written request

The prospective Interconnection Customer must provide electrical system information including relevant system studies, and other materials useful to understanding the interconnection at a particular point on the Transmission Provider's system with a formal written request form and a non-refundable processing fee of $300. The Transmission Provider will evaluate whether the proposed site's Point of Interconnection will be on a FERC jurisdictional facility within five (5) business days. If it is determined to not be on a FERC jurisdictional facility, the Transmission Provider will inform the prospective Interconnection Customer that the proposed interconnection site is not jurisdictional and return any deposits submitted for the pre-application. If it is determined to be on a FERC jurisdictional facility, Transmission Provider will provide pre-application report to the prospective Interconnection Customer within twenty (20) business days after the jurisdictional determination. The pre-application report provided by the Transmission Provider is non-binding, does not confer any rights, and still requires the Interconnection Customer to successfully apply to interconnect to the Transmission Provider's system (Tariff at Part IV, Section 109).

5.3 Study Requirements and Cost

5.3.1 Study Requirements and Cost

In all cases, with the exception of requests for (i) interconnection falling under the process defined in the Tariff applicable to permanent and temporary Energy Resource additions of 2MW

or less and (ii) interconnection falling under the process defined in the Tariff applicable to certified small inverter-based facility additions no larger than 10 kW, an Interconnection Customer must submit an Interconnection Request in the form of an executed Generation Interconnection Feasibility Study Agreement **(Tariff at Part VI, Attachment N)** and provide the same information required for larger resources. Deposit requirements are listed in the table below (Table 5.3.1-1) **(Tariff at Part IV, Section 112)**. Further:

- For resources of 2 MW or less (synchronous) or 5 MW or less (inverter-based), an Interconnection Customer must submit a completed Form of Screens Process Interconnection Request **(Tariff at Part IV, Section 112A, Attachment Y)**. See table 5.3.1-3 below for deposit requirements.
- For Certified Inverter-Based resources no larger than 10 kW, an interconnection customer must submit a completed Form of Interconnection Service Agreement for Certified Inverter-Based Facility **(Tariff at Part IV, Section 112B, Attachment BB)** and a non-refundable processing fee of $500.

Table 5.3.1-1: Small Generation Interconnection Process deposit requirements (Interconnection Requests for a Capacity resource ≤ 20 MW or a temporary Energy Resource of 20 MW or less but greater than 2 MW (synchronous) or up to 5 MW (inverter-based))

Month of New Services Queue	Deposit	Portion to be held as non-refundable
1st - 4th	$10,000	10%
5th	$12,000	10%
6th	$15,000	10%

If a Developer submits an Attachment N in any of the zones listed in Table 5.3.1-2 below, if the standard Tariff deposit is less than the amount shown in the table, the Developer shall provide PJM the difference between the value in Table 5.3.1-2 and the standard Tariff deposit. If a Transmission Owner zone is not on the table, then PJM expects the standard Tariff deposit will cover the Feasibility Study costs. Note however, that a Developer is responsible for actual costs of the study and actual costs may exceed the expected amount.

Table 5.3.1-2 Feasibility Study Expected Costs for Attachment N submitted Small Generation Interconnection Requests Transmission Owner Zone	Expected Costs ($)
AEP	16K
FE	14K

Table 5.3.1-2 Feasibility Study Expected Costs for Attachment N submitted Small Generation Interconnection Requests Transmission Owner Zone	Expected Costs ($)
ComEd	12K
PECO	11K

Table 5.3.1-3: Small Generation Interconnection Process deposit requirements (Interconnection Requests for a new permanent or temporary Energy Resource of 2MW or less (synchronous) or up to 5 MW (inverter-based))

Month of New Services Queue	Deposit	Portion to be held as non-refundable
1st - 4th	$2,000	10%
5th	$3,000	10%
6th	$5,000	10%

The deposit associated with the submission of the executed System Impact Study Agreement shall be in accordance with the requirements of Section 204.3A of the Tariff, which is also listed below in Table 5.3.1-4.

Table 5.3.1-4: System Impact Study Deposit

Project size	Required deposit	Portion to be held as non-refundable
>2MW and ≤20MW	$10,000	10%
≤2 MW	$5,000	10%

Note:

The Generation Interconnection Facilities Study deposit amount shall be in accordance with the requirements of Section 206.3 of the Tariff, which is also listed in Manual 14A Table 5.3.3-1.

5.4 Expedited and/or Combined Study Analysis

5.4.1 Expedited and/or Combined Study Analysis

Analysis conducted during the Generation Interconnection Feasibility and System Impact Studies will be expedited (to the degree possible) for new permanent Capacity Resources of 20 MW or less, or permanent Energy Resources of 20 MW or less, or increases of 20 MW or less to existing resources over any consecutive 24 month period **(Tariff at Part VI, Section 36.1.02 - formerly Section 36.12, in Part IV)**.

Power flow analysis will be performed based on a limited contingency set to identify the impact of the resource on the local system and any known violations in the area. Deliverability tests will only be performed for small capacity resources in areas where margins are known to be limited. Similarly, stability analysis will only be performed for small resources where existing stability margins are limited. Generation Interconnection Facilities Studies for small resources can only be expedited consistent with the scope of the required transmission facility additions and upgrades. A small generator interconnection or upgrade may qualify for the expedited study process if it meets the criteria described in Subpart G of the Tariff. Generally, if no load flow or short circuit network impacts are identified and there are no other projects in the vicinity of the small resource addition, a Combined Feasibility and Impact Study (a/k/a a combined study) can be issued to the Interconnection Customer. If a combined study report is being considered, the customer must provide the following within ten (10) business days of the Feasibility Study Scoping Meeting:

- System Impact Study Data
- Deposit adjustment, if required (the greater of the Feasibility Study or Impact Study deposit)

In order to consider a project for a combined study, the Interconnection Customer will need to select only one (1) Point of Interconnection (POI). No secondary POI will be considered for a combined study.

Analysis and design normally performed within the context of Generation Interconnection Feasibility, System Impact Studies will be performed within one study. Limited power flow analysis will be performed to ensure that local contingency criteria are not violated. Short circuit calculations will be performed to ensure that circuit breaker capabilities are not exceeded. The Transmission Owner, or contractors acting on their behalf, will evaluate the engineering details of the physical attachment of the resource, as well as the relaying and metering associated with the resource to ensure a safe and reliable interconnection. All very small resource interconnections require the execution of Interconnection Service Agreements. Permanent, small Capacity Resources and Energy Resources will execute the same form of Interconnection Service Agreement as required for larger resources. A modified form of the Interconnection Service Agreement will be executed for temporary Energy Resources that reflect their interconnection status and their rights with respect to participation in the PJM markets.

Tariff section 212.4 states that the tendered ISA (or WMPA) must be executed by the Interconnection Customer within 60 days after receipt of the study report. PJM issues both the study report and ISA or WMPA at the same time to give the Interconnection Customer the 60 day period to review both the report and agreement(s). In the case of a combined study report (assuming no Facilities Study is required), PJM will need additional time to create the required agreement(s) and get necessary legal review prior to issuing the report and agreement(s) to the customer. Because of the additional time for legal reviews, the targeted due date for the report and agreement to be delivered to the Interconnection Customer will be three (3) months after the Tariff due date for the Feasibility Study. Reference Exhibit 3 below.

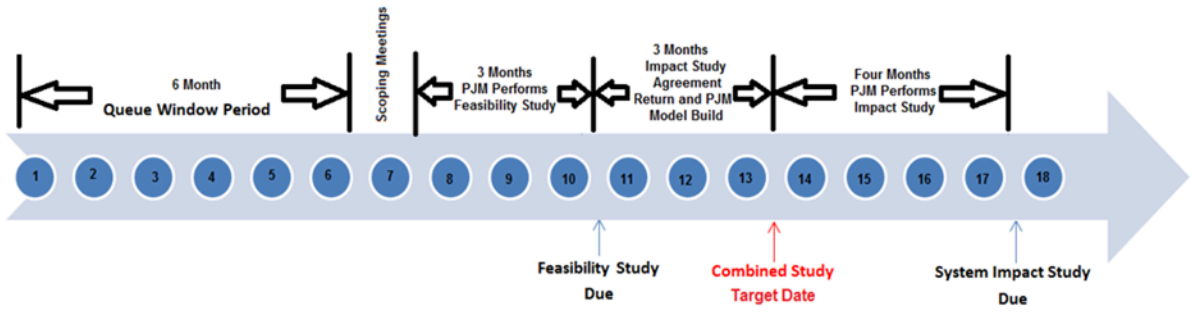

Exhibit 6: Combined Study Target Date

5.5 Specific Provisions for Resources of 10 MW or Less

Under certain circumstances, requests for the interconnection of new resources of 10 MW or less may be expedited through the use of pre-certified generation equipment and systems that meet IEEE Standard 1547 technical requirements. See Attachment C for PJM “Small Generator (10 MW and Below) Technical Requirements and Standards” for full details of the specific provisions that apply to all new generator interconnections with an aggregate size of 10 MW and below at the Point of Interconnection.

5.6 Specific Provisions for Resources Greater than 10 MW up to 20 MW

Requests for the interconnection of new resources greater than 10 MW up to 20 MW may also qualify for certain Applicable Standards based on the core IEEE Standard 1547 technical requirements. See Attachment E-1 for PJM “Small Generator (greater than 10 MW up to 20 MW) Technical Requirements and Standards” for full details of the specific provisions that apply to all new generator interconnections with an aggregate size of greater than 10 MW up to 20 MW at the Point of Interconnection.

Section 6: Large Generation Interconnection Requests

New service customers with generation greater than 20 MW are to follow the process that is outlined in PJM Tariff Part IV, Subpart A, Section 36.

General Application Process: Defined in Manual 14A, Section 2. The developer should also reference Section 2 of this Manual for “Entering the New Services Queue”.

Study Reports: The studies that a large generator will receive are outlined in Manual 14A, Section 4. The developer should also reference Section 3 of this Manual for “Reports and Agreements”.

Agreements and Costs: The agreements and costs which apply are in Manual 14A, Section 5. The developer should also reference Section 3 of this Manual for “Reports and Agreements”.

Attachment A: Generation Interconnection Feasibility Study Data

A.1 Scope

This Generation Interconnection Feasibility Study data attachment to Manual 14G is intended to provide a listing of the data which is required so that an Interconnection Customer may complete their data submission through Queue Point (link given below). This listing of data is not exhaustive since the required data fields in Queue Point will change depending on the selections made by the user. Completion of the data requirements through Queue Point is necessary for an Interconnection Request to be deemed a valid request.

Link location for Queue Point Access (see Section 2 of the Queue Point User Guide for how to Access Queue Point): http://pjm.com/planning/rtep-development/expansion-plan-process.aspx https://www.pjm.com/planning/services-requests/new-service-requests.aspx

A.2 Data Requirements for PJM RTEPP Feasibility Studies

Feasibility Studies are conducted to identify transmission expansion needed to maintain the system reliability given your generation onto the network. The data submitted is required to perform the power flow, and short circuit analysis which are necessary for the Feasibility Study Phase.

PJM uses the following programs to perform the Feasibility Analysis:

- 1. PSS/E program from PTI, Inc. (power flow)
- 2. Aspen from Advanced Systems for Power Engineering, Inc.(short circuit)

All data must be provided on an individual unit basis through Queue Point, queue requests with one generator or multiple generators can be submitted as one Attachment N.

If the final unit specifications are not certain an approximation must be made.

When more information is available, the Interconnection Customer must provide an update to PJM so that the typical model may be replaced with a detailed model based on the actual unit purchased.

The data listed in Attachment A-1 is required for a Generation Interconnection Feasibility Study.

Attachment A-1: Feasibility Study Data Form

Note:
This form is not to be used for submitting a Feasibility Study Form. Data must be submitted through Queue Point:

https://www.pjm.com/planning/services-requests/new-service-requests.aspx

* Denotes Required Field

General Information

Project name *

Name of a signature authority from company *
Interconnection Customer

Title *

Interconnection Customer (Company Name) *

Federal Tax ID *
XX-XXXXXXX

Phone (day) *

Phone (evening)

Email of a signature authority from company *
example@interconnectioncustomer.com

Fax

Country *
United States

Business address *

City *

State *
Select a state

Postal Code *

If the individual completing the form is not the signature authority named above, click yes, otherwise click no *

Yes No

Alternative Invoice Contact Information

Is the person receiving invoices the same as the person completing the form?

◯ Yes ◯ No

Facility Information

Facility location *

◯ Street address ◯ GPS coordinates

Is this a change in data to a previously submitted queue position or facility name? *

◯ Yes ◯ No

Is this queue request claiming rights from a previous facility? *

◯ Yes ◯ No

Planned in-service date *

Point of Interconnection

Point of Interconnection

How many Points of Interconnection (POI) do you want to submit?

○ Primary ◉ Primary & Secondary

Primary POI Connection

POI state

Select a state

POI county

Select a county

Connection type

◉ Direct connection / Existing substation ○ Single line tap / New substation ○ Other connection type

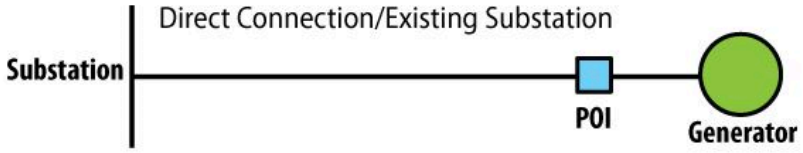

Substation name

POI voltage

kV

Secondary POI Connection

POI state

Select a state

POI county

Select a county

Connection type

- ○ Direct connection / Existing substation
- ◉ Single line tap / New substation
- ○ Other connection type

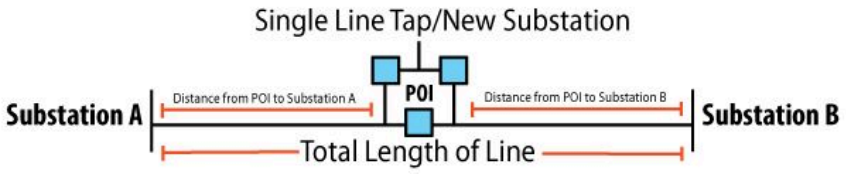

Substation A (from)

Substation B (to)

Distance from POI to Substation A

Miles

Distance from POI to Substation B

Miles

Line voltage

kV

Total length of line

Miles

Project Capability

Type of request *

(●) Modify existing facility or facility construction ( ) Build new facility

Describe the type of work that will be performed *

Generating Facility Capability

	Summer	Winter
Net energy existing *	The expected Summer MW capabilities during summer period	The expected Winter MW capabilities during winter period MW
Net energy proposed incremental increase *	The expected Summer MW capabilities during summer period	The expected Winter MW capabilities during winter period MW
Total net energy *		MW
Gross energy output of facility *	The expected Summer MW capabilities during summer period	The expected Winter MW capabilities during winter period MW

Note:
Wind projects (without an engineering evaluation) will be assigned capacity factor values from the posted values on the following webpage: http://www.pjm.com/planning/resource-adequacy-planning/resource-reports-info.aspx If requesting higher than the posted values, evidence should be an engineering evaluation showing capability due to wind available at the location and wind turbine model power curves for the summer period (June 1 – August 31 2:00 p.m. – 6:00 p.m.).

Solar projects (without an engineering evaluation) will be assigned capacity factor values from the posted values on the webpage listed above. If requesting higher than the posted values, evidence should include an engineering evaluation showing capability due to the DC/AC ratio, tracking, location, cloud cover and include a PVSyst report or its equivalent for the summer period (June 1 - August 31 2:00 p.m. - 6:00 p.m.). For further refinement of solar capacity factors, the solar calculators on the webpage listed above can be used.

	Capacity Interconnection Rights (CIRs)	Maximum Facility Output (MFO)
Existing *	The expected Summer MW capabilities during summer period	The expected Winter MW capabilities during winter period MW
Proposed incremental increase *	The expected Summer MW capabilities during summer period	The expected Winter MW capabilities during winter period MW
Total *		MW

Fuel Supply Verification

Primary fuel type

◯ Natural Gas ◯ Other

Behind The Meter

Purpose of application: *

◯ New Behind The Meter generating unit(s) ◯ Existing Behind The Meter generating unit(s) ◯ Not applicable

Describe electrical connections between the generation facility and the load.

☐ Certify that the single line diagram contains information necessary to determine the location of the load as compared to the generation for the behind the meter generation.

Supporting Documents
To submit multiple files at once, please place them into a Zip file before uploading.

Identification of ownership interest (site control) + Choose File

Site plan * + Choose File

Single line diagram * + Choose File

Evidence Supporting CIRs higher than Class Average + Choose File
Only for Solar, Wind, Off-Shore Wind & Storage.

Other documents + Choose File

For Solar, Wind, Off-Shore Wind & Storage projects, please upload Evidence Supporting CIRs higher than Class Average.

Generator Information

The next section below pertains to inverter based generator data (e.g. solar and storage).

Inverter

Machine ID *
(e.g. ST, CT, CT1, CT2, ST2, etc.)

Number of identical inverter(s) *

MVA base
MVA

Terminal voltage *
kV

Maximum fault current output from the inverter *
P.U.

Any NERC acceptable model can be submitted as a stability model of the project.

If a User Defined Model (UDM) would be used as the stability model for the project, then along with the Attachment B-1, a request for an exception must be provided to PJM.

The next section below pertains to Wind Farm Generator data (e.g. offshore wind and wind).

Wind Farm Generator

Machine ID *
(e.g. ST, CT, CT1, CT2, ST2, etc.)

Specify model

Specify manufacturer

MW Value per turbine (nominal rating) * MW

Number of wind turbine generators *

Number of identical wind turbine(s) *

MVA base * MVA

Terminal voltage * kV

Type 4 turbine *
Yes No

Stator resistance, R1 Ohms

Saturated sub-transient reactance, X"d(v) * P.U.

Any NERC acceptable model can be submitted as a stability model of the project.

If a User Defined Model (UDM) would be used as the stability model for the project, then along with the Attachment B-1, a request for an exception must be submitted to PJM.

The next section below pertains to synchronous generator data (e.g. Biomass, Coal, Diesel, Hydro, Methane, Natural Gas, Nuclear, Oil, Wood and Other).

Synchronous Generator

Machine ID *

(e.g. ST, CT, CT1, CT2, ST2, etc.)

MVA base * MVA

Terminal voltage * kV

Saturated Reactances

Saturated sub-transient reactance, X"d(v) * P.U.

X"d(v) < X"d(i)

Transient reactance, X'd(v) P.U.

X'd(v) > X"d(v)

Synchronous reactance, Xd(v) P.U.

Xd(v) > X'd(v)

Negative sequence reactance, X2(v) P.U.

Zero sequence reactance, X0(v) P.U.

Resistances

DC armature resistance, Ra Ohms

Positive sequence resistance, R1 P.U.

Negative sequence resistance, R2 P.U.

Zero sequence resistance, R0 P.U.

Time Constants

Armature three-phase short circuit, Ta3 Seconds

0.025 ≤ Ta ≤ 0.1

High voltage side of the GSU

Transformer Information

The next section below pertains to main transformers and generator step up transformers.

Select Generator Machine ID(s) for this Transformer

Available Machines		Machines Assigned to Transformer
	→	
	→I	
	←	
	I←	

Transformer name *

Number of identical transformers

MVA base *

MVA

Cooling class designation(s) for your transformer

How many ratings does the transformer have? *

(●) One rating ( ) Two ratings ( ) Three ratings

Rating 1 *

Select cooling designation _____ MVA

Winding Type

( ) Two Windings (●) Three Windings

Impedance on MVA base

All Values in P.U. on Transformer MVA base

	R	X	X/R
High-side to low-side *	P.U.	P.U.	
High-side to tertiary *	P.U.	P.U.	
Low-side to tertiary *	P.U.	P.U.	

	R0	X0	X/R
High-side to low-side *	P.U.	P.U.	
High-side to tertiary *	P.U.	P.U.	
Low-side to tertiary *	P.U.	P.U.	

Winding Nominal Voltages

High-side * _____ kV

Low-side * _____ kV

Tertiary * _____ kV

Winding Connection Types

Delta, Wye, Wye Gnd, etc

High-side * Select One

Low-side * Select One

Tertiary * Select One

Attachment Line Data

Voltage level _____ kV

MVA base 100.000000 MVA

Attachment line length _____ Miles

Impedance on 100 MVA Base

	R	X	
Total branch positive sequence impedance			P.U.
Total branch zero sequence impedance			P.U.
		B	
Total branch charging susceptance			P.U.

Attachment B: System Impact Study Data

B.1 Scope

This System Impact Study data attachment to Manual 14G is intended to provide a listing of the data which is required so that an Interconnection Customer may complete their submission through Queue Point (link given below). This listing of data is not exhaustive since the required data fields in Queue Point will change depending on the selections made by the user. Completion of the data requirements through Queue Point is necessary for an Interconnection Request to be deemed a valid request.

Link location for Queue Point:

https://pjm.com/planning/services-requests/new-service-requests.aspx

B.2 Data Requirements for PJM RTEPP System Impact Studies

The data listed in Attachment B-2 must be submitted to ensure proper modeling of Interconnection Requests in the System Impact Study phase. System Impact Studies are conducted to identify transmission expansion needed to maintain the system reliability given the addition of your generation on to the network. The data that is submitted is required to perform the power flow, short circuit and dynamic simulation analyses which are necessary for the Impact Study phase.

PJM uses the following programs to perform the System Impact Study Analysis:

1. PSS/E from PTI, Inc. (power flow and dynamic simulation)
2. Aspen from Advanced Systems for Power Engineering, Inc.(short circuit)

Minimum requirement fields are indicated by *

All data must be provided on an individual unit basis in Queue Point.

If the final unit specifications are not certain an approximation must be made. When more information is available, the Interconnection Customer must provide an update to PJM so that the typical model may be replaced with a detailed model based on the actual unit purchased.

Attachment B-1: Dynamic Model Study Request Form

RECITALS

1. This Agreement, dated as of _____, _____, is entered into by and between _____("Customer") and PJM Interconnection, L.L.C. ("Transmission Provider"). Capitalized terms used in this agreement, unless otherwise indicated, shall have the meanings ascribed to them in the PJM Tariff ("Tariff").

2. The Customer has notified the Transmission Provider that it plans to provide a new dynamic model or new version of an existing model for study of a Generation Interconnection Request(s).

3. The Customer shall provide sufficient information regarding the model and any facility information to enable Transmission Provider to evaluate the model for use in future System Impact Study.

PURPOSE OF THE STUDIES UNDER THIS AGREEMENT

4. Transmission Provider shall conduct studies to determine whether the model and information provided will be acceptable for the study of a Generation Interconnection Request. Upon completion of the studies, Transmission Provider shall provide the Customer with determination of the acceptability for use of the model for a Generation Interconnection Request. In the event that the Transmission Provider is unable to complete the studies within 90 days of the execution of this Agreement, and receipt of the relevant materials which includes any relevant specifications and modeling data, the Transmission Provider shall notify the Customer and explain the reasons for the delay.

CONFIDENTIALITY

5. The Transmission Provider shall keep confidential all information provided to it by the Customer used in the performance of the study of the new model.

6. Customer acknowledges that, consistent with Part VI of the Tariff, the Transmission Provider may contract with consultants, including the Transmission Owners, to provide services or expertise in the study process and that the Transmission Provider may disseminate information to the Transmission Owners.

COST RESPONSIBILITY

7. The Customer shall reimburse the Transmission Provider for the actual cost of the studies. Customer shall supply an initial deposit of $10,000, with the execution of this agreement, in order to fund initial studies. All deposit monies shall be fully refundable following payment of all charges incurred in the study of this model.

DISCLAIMER OF WARRANTY, LIMITATION OF LIABILITY

8. In analyzing and preparing the studies, the Transmission Provider, the Transmission Owner(s), and any other subcontractors employed by the Transmission Provider shall have to rely on information provided by the Customer and possibly by third parties and may not have control over the accuracy of such information. Accordingly, NEITHER THE TRANSMISSION PROVIDER, THE TRANSMISSION OWNER(S), NOR ANY OTHER SUBCONTRACTORS EMPLOYED BY THE TRANSMISSION PROVIDER MAKES ANY WARRANTIES, EXPRESS OR IMPLIED, WHETHER ARISING BY OPERATION OF LAW, COURSE OF PERFORMANCE OR DEALING, CUSTOM, USAGE IN THE TRADE OR PROFESSION, OR OTHERWISE, INCLUDING WITHOUT LIMITATION IMPLIED WARRANTIES OF MERCHANTABILITY AND FITNESS FOR A PARTICULAR PURPOSE WITH REGARD TO THE ACCURACY, CONTENT, OR CONCLUSIONS OF THE NECESSARY STUDIES. The Customer acknowledges that it has not relied on any representations or warranties not specifically set forth herein and that no such representations or warranties have formed the basis of its bargain hereunder. Neither this Agreement nor the studies performed hereunder are intended, nor shall either be interpreted, to constitute agreement by the Transmission Provider or the Transmission Owner(s) to provide any transmission or interconnection service to or on behalf of the Customer either at this point in time or in the future.

9. In no event will the Transmission Provider, Transmission Owner(s) or other subcontractors employed by the Transmission Provider be liable for indirect, special, incidental, punitive, or consequential damages of any kind including loss of profits, whether under this Agreement or otherwise, even if the Transmission Provider, Transmission Owner(s), or other subcontractors employed by the Transmission Provider have been advised of the possibility of such a loss. Nor shall the Transmission Provider, Transmission Owner(s), or other subcontractors employed by the Transmission Provider be liable for any delay in delivery or of the non-performance or delay in performance of the Transmission Provider's obligations under this Agreement. Without limitation of the foregoing, the Customer further agrees that Transmission Owner(s) and other subcontractors employed by the Transmission Provider to prepare or assist in the preparation of any Necessary Studies shall be deemed third party beneficiaries of this provision entitled "Disclaimer of Warranty/Limitation of Liability."

MISCELLANEOUS

10. Any notice or request made to or by either party regarding Agreement shall be made to the representative of the other party as indicated below.

Transmission Provider

PJM Interconnection, L.L.C.

2750 Monroe Boulevard

Audubon, PA 19403

Customer

_____

_____

_____

Attn:	
Phone:	
Email:	

11. No waiver by either party of one or more defaults by the other in performance of any of the provisions of this Agreement shall operate or be construed as a waiver of any other or further default or defaults, whether of a like or different character.

12. This Agreement or any part thereof, may not be amended, modified, or waived other than by a writing signed by all parties hereto.

13. This Agreement shall be binding upon the parties hereto, their heirs, executors, administrators, successors, and assigns.

IN WITNESS WHEREOF, the Transmission Provider and the Customer have caused this Agreement to be executed by their respective authorized officials.

Transmission Provider:

By:	Name:	Title	Date
	Printed Name of Signer:		

Customer:

By:	Name:	Title	Date
	Printed Name of Signer:		

ATTACHMENT #1

Generator Data

Add data to be used (Supply data under the form of the Impact Study Data Form through the PJM website as well as configuration information for the facility).

Attachment B-2: System Impact Study Data Form

Note:
This form is not to be used for submitting System Impact Study Datasheet. Data must be submitted through Queue Point:https://www.pjm.com/planning/services-requests/new-service-requests.aspxhttp://pjm.com/planning/rtep-development/expansion-plan-process.aspx

* Denotes Required Field

General Information

Queue number
EXAMPLE

Project name *

Name of a signature authority from company *
Interconnection Customer

Title *

Interconnection Customer (Company Name) *

Federal Tax ID *
XX-XXXXXXX

Phone (day) *

Phone (evening)

Email of a signature authority from company *
example@interconnectioncustomer.com

Fax

Country *
United States

Business address *

City *

State *
Select a state

Postal Code *

If the individual completing the form is not the signature authority named above, click yes, otherwise click no *

Yes No

Alternative Invoice Contact Information

Is the person receiving invoices the same as the person completing the form?

◯ Yes ◯ No

Facility Information

Facility location *

◯ Street address ◯ GPS coordinates

Is this a change in data to a previously submitted queue position or facility name? *

◯ Yes ◯ No

Is this queue request claiming rights from a previous facility? *

◯ Yes ◯ No

Planned in-service date *

Point of Interconnection

POI state *

Select a state

POI county *

Select a county

Connection type *

◯ Direct connection / Existing substation ◉ Single line tap / New substation ◯ Other connection type

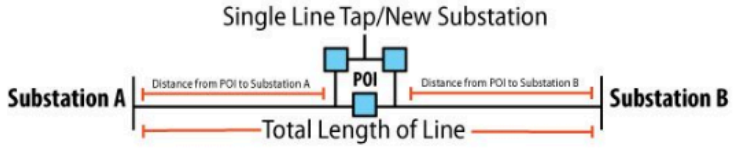

Substation A (from) *

Substation B (to) *

Distance from POI to Substation A *

Miles

Distance from POI to Substation B *

Miles

Line voltage *

kV

Total length of line

Miles

Project Capability

Type of request *

(•) Modify existing facility or facility construction ( ) Build new facility

Describe the type of work that will be performed *

Generating Facility Capability

	Summer	Winter	
Net energy existing *	The expected Summer MW capabilities during summer period	The expected Winter MW capabilities during winter period	MW
Net energy proposed incremental increase *	The expected Summer MW capabilities during summer period	The expected Winter MW capabilities during winter period	MW
Total net energy *			MW
Gross energy output of facility *	The expected Summer MW capabilities during summer period	The expected Winter MW capabilities during winter period	MW

	Capacity Interconnection Rights (CIRs)	Maximum Facility Output (MFO)	
Existing *	The expected Summer MW capabilities during summer period	The expected Winter MW capabilities during winter period	MW
Proposed incremental increase *	The expected Summer MW capabilities during summer period	The expected Winter MW capabilities during winter period	MW
Total *			MW

Auxiliary Load

	Summer	Winter	
Total auxiliary load of facility * *Load related to the operations of the plant (e.g fans, pumps, etc)*	The expected Summer MW capabilities during summer period	The expected Winter MW capabilities during winter period	MW
			MVAR

Where is the auxiliary load being connected? *

Select one

Station Load

	Summer	Winter	
Station load to support generation of electricity * *Load necessary to support facility of the plant (e.g. heating, lighting, air-conditioning, office equipment etc)*	The expected Summer MW capabilities during summer period	The expected Winter MW capabilities during winter period	MW
			MVAR

Where is the station load being connected? *

Select one

Total Reactive Power Capability at Max Gross Energy Output

	Summer	Winter	
Lagging - Overexcited			MVAR
Leading - Underexcited			MVAR

Additional comments related to the configuration above: *

Fuel Supply Verification

Primary fuel type

◯ Natural Gas ◯ Other

Behind The Meter

Purpose of application: *

◯ New Behind The Meter generating unit(s) ◯ Existing Behind The Meter generating unit(s) ◯ Not applicable

Describe electrical connections between the generation facility and the load.

☐ Certify that the single line diagram contains information necessary to determine the location of the load as compared to the generation for the behind the meter generation.

Supporting Documents
To submit multiple files at once, please place them into a Zip file before uploading.

Single line diagram * + Choose File

Other documents + Choose File

For Solar, Wind, Off-Shore Wind & Storage projects, please upload Evidence Supporting CIRs higher than Class Average.

Generator Information

The next section below pertains to inverter based generator data (e.g. solar and storage).

Note:
All inverter based projects greater than 20 MW must submit a dynamic model. Dynamic model may be requested for projects less than 20 MW depending on the area. To avoid delays, whenever available, please submit a dynamic model.

Inverter

Machine ID *
(e.g. ST, CT, CT1, CT2, ST2, etc.)

Number of identical inverter(s) *

Specify manufacturer *

Specify model *

MW value per inverter * MW

MVA base * MVA

Terminal voltage * kV

Maximum fault current output from the inverter * P.U.

Nominal power factor P.U.

Voltage relays installed *
○ Yes ○ No

Frequency relays installed *
○ Yes ○ No

Stability Models
To submit multiple files at once, please place them into a Zip file before uploading.

Generator Models, Relay Model & Frequency Relay Model * + Choose File

Other documents + Choose File

Any NERC acceptable model can be submitted as a stability model of the project.

If a User Defined Model (UDM) would be used as the stability model for the project, then along with the Attachment B-1, a request for an exception must be submitted to PJM.

The next section below pertains to wind generator data (e.g. offshore wind and wind).

Wind Farm Generator

Machine ID *
(e.g. ST, CT, CT1, CT2, ST2, etc.)

Specify manufacturer *

Number of wind turbine generators *

MVA base * MVA

Nominal power factor P.U.

Type 4 turbine *
Yes No

Control mode for the wind turbine *
Please select a control mode

Voltage relays installed *
Yes No

Specify model *

MW Value per turbine (nominal rating) * MW

Number of identical wind turbine(s) *

Terminal voltage * kV

Frequency relays installed *

◯ Yes ◯ No

Additional Reactive compensation? *

◯ Yes ◯ No

Stability Models

To submit multiple files at once, please place them into a Zip file before uploading.

Generator Models, Relay Model & Frequency Relay Model * [+ Choose File]

Other documents [+ Choose File]

Any NERC acceptable model can be submitted as a stability model of the project.

If a User Defined Model (UDM) would be used as the stability model for the project, then along with the Attachment B-1, a request for an exception must be submitted to PJM.

The next section below pertains to synchronous generator data (e.g. Biomass, Coal, Diesel, Hydro, Methane, Natural Gas, Nuclear, Oil, Wood and Other).

Synchronous Generator

Machine ID *

(e.g. ST, CT, CT1, CT2, ST2, etc.)

MVA base * MVA

Terminal voltage * kV

Nominal power factor P.U.

	Summer	Winter
Capacity Interconnection Rights (CIRs) *	*The expected Summer MW capabilities during summer period*	*The expected Winter MW capabilities during winter period* MW
Total gross energy of facility *	*The expected Summer MW capabilities during summer period*	*The expected Winter MW capabilities during winter period* MW

Unit reactive power capability at max gross energy output *
Lagging - overexcited

MVAR

Unit reactive power capability at max gross energy output *
Leading - underexcited

MVAR

Unit auxiliary load at max gross energy power output *

MW

The expected Summer MW capabilities during summer period

The expected Winter MW capabilities during winter period

MVAR

Where is the auxiliary load being connected? *

Select connection

Generator Parameters

Combined turbine-generator-exciter inertia, H *

kWs/kVA

1 < H < 10

Speed damping coefficient, D *

P.U.

0 ≤ D < 3

Generator Saturation

Generator saturation at 1.0 p.u. voltage, S (1.0) *

P.U.

0 < S1.0

Generator saturation at 1.2 p.u. voltage, S (1.2) *

P.U.

S1.0 < S1.2

Unsaturated Reactances

Direct axis synchronous reactance, Xd(i) *

P.U.

xd(i) < 2.5

Direct axis transient reactance, X'd(i) *

P.U.

x'd < 0.5 x xd(i)

Direct axis sub-transient reactance, X"d(i) *

P.U.

x"d(i) < x'd(i)

Quadrature axis synchronous reactance, Xq(i) *

P.U.

xq(i) < xd(i)

Quadrature axis transient reactance, X'q(i) * P.U.
x'q(i) < xq(i)

Stator leakage reactance, Xl: * P.U.

Negative sequence reactance, X2(i) * P.U.

Zero sequence reactance, X0(i) * P.U.

Saturated Reactances

Saturated sub-transient reactance, X"d(v) * P.U.
X"d(v) < X"d(i)

Transient reactance, X'd(v) * P.U.
X'd(v) > X"d(v)

Synchronous reactance, Xd(v) * P.U.
Xd(v) > X'd(v)

Negative sequence reactance, X2(v) * P.U.

Zero sequence reactance, X0(v) * P.U.

Resistances

DC armature resistance, Ra * Ohms

Positive sequence resistance, R1 P.U.

Negative sequence resistance, R2 * P.U.

Zero sequence resistance, R0 * P.U.

Time Constants

Direct axis transient open circuit, T'do * Seconds
1. < T'do < 10

Direct axis sub-transient open circuit, T"do * Seconds
0.01667 < T"do < 0.2

Quadrature axis transient open circuit, T'qo * Seconds
0.2 ≤ T'qo ≤ 1.5

Quadrature axis sub-transient open circuit, T"qo * Seconds
0.01667 ≤ T"qo ≤ 0.2

Armature three-phase short circuit, Ta3 *

Seconds

0.025 ≤ Ta ≤ 0.1

Stability Models

To submit multiple files at once, please place them into a Zip file before uploading.

Generator Models, Relay Model & Frequency Relay Model * + Choose File

Excitation System Models * + Choose File

Prime Mover & Governor Models * + Choose File

Static Var Compensator (SVC) & Frequency Changer Models + Choose File

Power System Stabilizer Models + Choose File

Maximum Excitation Limiter Models + Choose File

Minimum Excitation Limiter Models + Choose File

Compensation Models + Choose File

Other documents + Choose File

PSS/E Simulation Information

PJM follows NERC and MMWG practice in regards to dynamic model requirements. The latest MMWG procedure manual can be found at the following URL: https://rfirst.org/ProgramAreas/RAPA/ERAG/MMWG

NERC's Acceptable Models List is available on the NERC System Analysis and Modeling Subcommittee website: https://www.nerc.com/comm/PC/Pages/System-Analysis-and-Modeling-Subcommittee-(SAMS)-2013.aspx

Other models will only be accepted with a valid technical justification and proper documentation.

Each model can have unique data requirements. The minimum modeling required for dynamic simulation is a generator model, and an exciter model. These must be identified / submitted by the Interconnection Customer.

The manufacturer of the equipment to be incorporated in the design of a facility should be able to provide the proper model or an equivalent for the Interconnection Customer to identify. If you cannot determine the exact PSS/E model, you must submit a Control/Block Diagram for the piece of equipment in question.

Transformer Information

Select Generator Machine ID(s) for this Transformer

Available Machines

Machines Assigned to Transformer

Transformer name *

Number of identical transformers

MVA base *

MVA

Cooling class designation(s) for your transformer

How many ratings does the transformer have? *

How many ratings does the transformer have? *

◯ One rating ◯ Two ratings ◯ Three ratings

Rating 1 *

Select cooling designation _____ MVA

Winding Type

◯ Two Windings ◉ Three Windings

Impedance on MVA base

All Values in P.U. on Transformer MVA base

	R	X	X/R
High-side to low-side *	P.U.	P.U.	
High-side to tertiary *	P.U.	P.U.	
Low-side to tertiary *	P.U.	P.U.	

	R0	X0	X/R
High-side to low-side *	P.U.	P.U.	
High-side to tertiary *	P.U.	P.U.	
Low-side to tertiary *	P.U.	P.U.	

Winding Nominal Voltages

High-side * _____ kV

Low-side * _____ kV

Tertiary * _____ kV

Winding Nominal Voltages

High-side * kV

Low-side * kV

Tertiary * kV

Winding Connection Types

Delta, Wye, Wye Gnd, etc

High-side * Select One

Low-side * Select One

Tertiary * Select One

Tap position

Off-nominal turns ratio

Number of taps

Step size

Collector System Equivalent

Does the project have collector system equivalent data (modeled between main transformer and step-up transformers)?

Yes No

Voltage level * kV

MVA base * 100 MVA

Impedance on 100 MVA Base

	R	X	
Total branch positive sequence impedance *			P.U.
Total branch zero sequence impedance *			P.U.
		B	
Total branch charging susceptance *			P.U.

Collector System Equivalent data

To submit multiple files at once, please place them into a Zip file before uploading.

Lumped collector system + Choose File

Attachment Line Data

Voltage level * _____ kV

MVA base * 100.000000 MVA

Attachment line length * _____ Miles

Conductor type

Select conductor type

Impedance on 100 MVA Base

	R	X	
Total branch positive sequence impedance *			P.U.
Total branch zero sequence impedance *			P.U.
		B	
Total branch charging susceptance *			P.U.

Attachment C: Small Generator (10 MW or Less) Technical Requirements and Standards

C.1 Scope

The PJM Small Generator Interconnection Applicable Technical Requirements and Standards ("Small Generator Standards") shall apply to all new generator interconnections, within the PJM footprint, with an aggregate size of 10 MW or less at the point of interconnection.

The Small Generator Standards shall be read and construed as to be consistent with the PJM Tariff ("Tariff"). In the event of any inconsistency between the terms and conditions of the Small Generator Standards and the terms and conditions of the Tariff, the terms of the Tariff shall control. All terms contained in the Small Generator Standards shall be defined as defined by the Tariff. While PJM strives to ensure that the information reflected herein is complete, accurate and reliable, it expressly disclaims any warranty, whether express or implied, as to information contained. Entities relying on the information contained herein do so at their own risk.

C.2 Purpose

To align the applicable technical requirements used within PJM with the IEEE Standard 1547 for Interconnecting Distributed Resources with Electric Power Systems, and to facilitate the pre-certification of manufactured generation equipment and systems for use within PJM.

C.3 Background and Discussion

Developed by the PJM Small Generator Interconnection Working Group ("SGIWG"), the Small Generation Standards define the uniform technical requirements that each Interconnected Transmission Owner ("ITO") and Electric Distribution Company ("EDC") requires for interconnecting to their facilities. The requirements as defined herein will govern for the interconnection of distributed generation 10 MW or less.

ITOs and EDCs may, by mutual agreement, elect to waive certain IEEE 1547 requirements and associated exceptions and conditions stated herein, but may not add requirements to IEEE 1547 other than the exceptions and conditions contained herein. For small generators qualifying for interconnection under state rules, the state-approved technical requirements and procedures shall govern. In the event that a small generator has interconnected under state rules and thereafter elects to participate in any PJM market, such small generator must comply with the terms of PJM's Small Resource Interconnection Procedure Manual and these Small Generation Standards. The small generator must submit a completed Feasibility Study Request (Attachment N of the Tariff) and will be responsible for any subsequent study costs. Additionally, the small generator will be required to execute PJM's three-party Interconnection Service

Agreement with PJM and the local Transmission Owner, and to the extent applicable, an Electric Distribution Company, as the case may be.

C.4 General Application Note for Transmission System Interconnections

In its present form IEEE Standard 1547 is primarily intended to address generator interconnections of 10 MVA or less to radial distribution systems. In order to extend the use of IEEE Standard 1547 beyond this scope to include connection to transmission[1]5 facilities, it is necessary to clarify the meaning of Section 4.2.1 to assure that system protection requirements are compatible with the established reliability criteria used for those systems.

IEEE Standard 1547 Section 4.2.1 (Area EPS Faults) requires that "the DR unit shall cease to energize the Area EPS for faults on the Area EPS circuit to which it is connected." For transmission Interconnections, this implies that the protection scheme(s) be compatible and coordinate with the Area EPS protection scheme(s) used for the line or substation to which they are interconnected, or be compatible and coordinate with new protection equipment installed due to the connection of the generation to this facility.

C.5 Tariff / IEEE 1547 Definition Cross-Reference

IEEE Standard 1547	Tariff
PCC (Point of Common Coupling)	POI (Point of Interconnection)
Point of DR Connection	Not Applicable
EPS (Electric Power System)	Interconnected Transmission Owner Facilities
Area EPS Operator	Interconnected Transmission Owner
Not Applicable	Transmission Provider (PJM)
DG (Distributed Generation)	Interconnected Generation Customer Facilities which are not connected to the Bulk Power Transmission System

[1] In the context used here, transmission systems are systems 69 kV or greater or networked lower voltage systems that are used for backbone energy delivery within smaller geographic areas, much the same as most 69 kV systems.

IEEE Standard 1547	Tariff
DR (Distributed Resources)	Interconnected Generation Facility which is not connected to the Bulk Power Transmission System
Interconnection Equipment	Not Applicable
Interconnection System	Interconnection Facilities
Not Applicable	Interconnection Customer Facilities
Electric Power System, local	Not Applicable
Electric Power System, area	Not Applicable
Cease to Energize (Cessation of energy outflow capability)	Not Applicable

Note:
The illustration below is for cross-reference of Tariff and IEEE 1547 terms only.

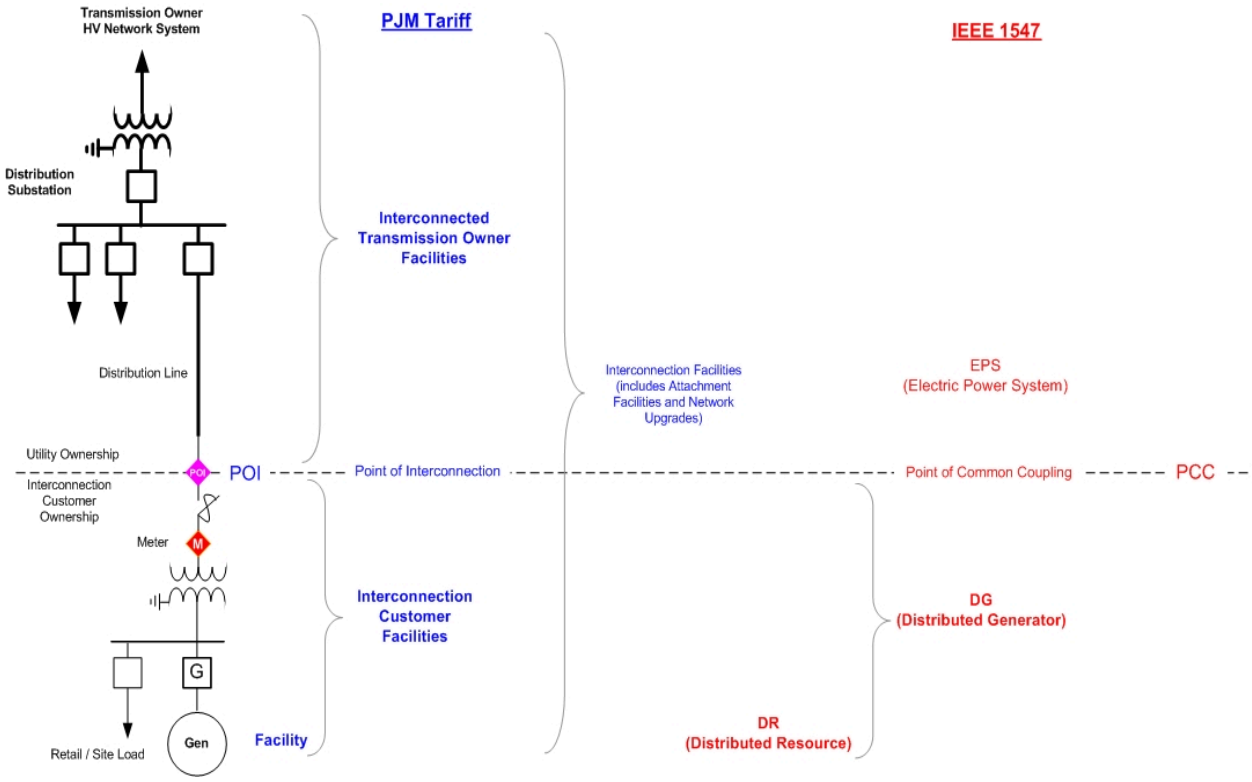

C.6 Applicable Technical Requirements and Standards

IEEE Standard 1547 shall constitute the total technical requirements and standards for interconnection of small generators of 10 MW and below with the following noted exceptions, additions, and clarifications. IEEE Standard 1547.1 constitutes the requirement for test conformance to IEEE Standard 1547.

IEEE Standard Requirement		Exceptions or Additions
4.1.1	Voltage Regulation	None. See Application Note 1.
4.1.2	Integration with Area EPS Grounding	None. See Application Note 2.
4.1.3	Synchronization	None. See Application Note 3.
4.1.4.1	Distribution Secondary Grid Networks (under development)	None. See Application Note 4.
4.1.4.2	Distribution Secondary Spot Networks	Exception. ComEd only allows Spot Network interconnections on an exception basis or where state commission regulations specify requirements.
4.1.5	Inadvertent Energization of the Area EPS	None.
4.1.6	Monitoring	None. See Application Note 5.
4.1.7	Isolation Device	None. See Application Note 6.
4.1.8.1	Protection from EMI	None.
4.1.8.2	Surge Withstand Performance	None.
4.1.8.3	Paralleling Device Withstand	None.
4.2.1	Area EPS Faults	PEPCO and PSEG exception for Islanding protection. See Application Notes 7 and 12.
4.2.2	Area EPS Reclosing Coordination	None. See Application Note 13.
4.2.3	Voltage	None. See Application Note 8.
4.2.4	Frequency	None.
4.2.5	Loss of Synchronism	None.

IEEE Standard Requirement		Exceptions or Additions
4.2.6	Reconnection to Area EPS: (a) Voltage Requirement (b) Frequency Requirement	None. See Application Note 9. None. See Application Note 9.
4.3.1	Limitation of DC Injection	None.
4.3.2	Limitation of Flicker induced by the DR	None. See Application Note 10.
4.3.4	Harmonics	PPL exception. See Application Note 11.
4.4.1	Unintentional Islanding	PEPCO and PSEG exceptions. See Application Note 12.
5.1	Design Test	None. See Application Note 14.
5.2	Production Tests	None. See Application Note 14.
5.3	Interconnection Installation Evaluation	None.
5.4	Commissioning Tests	None.
5.5	Periodic Tests	None.

C.6.1 Application Notes

4.1.1 Voltage Regulation. (Application Note 1)

Depending on size of generation (relative to EPS strength) and location of interconnection, the interconnected generation may be required to provide or absorb reactive power and/or follow a voltage schedule to maintain an acceptable voltage profile on the EPS with the addition of the new generating facility.

4.1.2 Integration with Area EPS grounding. (Application Note 2)

Where new transformers are required:

- AP requires a wye-grounded connection on the T.O. side of the DG step up transformer; and
- PEPCO's requirement for an isolation transformer including its configuration at 13.8 kV and above, will be determined on a case by case basis and will depend on the generating facility's location and system configuration.

AP and PEPCO requirements specified above do not apply if a generator is being connected to a system on the low voltage side of an existing Interconnection Customer transformer.

Other Transmission Owners within PJM will accept a delta or wye-ungrounded connection provided that adequate protection is provided by the DG to detect a ground and limit any over-voltage to an acceptable level on the TO's system. Adequate protection includes voltage monitoring on the high side of the DG main transformer using phase to ground connected VTs. Also see Application Note 5 for an additional AEP Application Note for grounding coordination related to operation of isolating devices.

4.1.3 Synchronization. (Application Note 3)

IEEE 1547 Synchronization voltage fluctuation requirement of +/- 5% is applicable as stated. Flicker requirement 4.3.2 guidance is provided by IEEE Standard 519 and IEEE Flicker Task Force P1453. However, the requirement which must be met for 4.3.2 is to not cause voltage and /or frequency disturbances which are objectionable to other EPS customers during actual operation of DR.

4.1.4.1 Distribution Secondary Grid Networks. (Application Note 4)

IEEE 1547 presently does not address the requirements for Secondary Grid Networks. These interconnection requests will be evaluated on a case by case basis.

4.1.6 Monitoring. (Application Note 5)

"Each DR unit of 250 kVA or more or DR aggregate of 250 kVA or more at a single PCC shall have provisions for monitoring its connection status, real power output, reactive power output, and voltage at the point of DR connection." Local monitoring provisions, such as panel meters and indicating lights, may be acceptable to meet these requirements in certain cases.

- An Internet-based SCADA alternative (see Informative Annex #2) was developed as a reliable and economical alternative to direct SCADA communications with the TO. In addition to generally lower installed cost for the "Internet SCADA alternative," the Internet ongoing communication costs may be more cost effective to other alternatives, especially those that require leased telephone circuits.

Note:
Informative Annex #2 is available on the PJM Web site (https://www.pjm.com/planning/services-requests/new-service-requests.aspx) and select from among the 10 specific documents listed under the heading "Information Annex #2 References for Manual 14D, Attachment H."

- When full-time dedicated SCADA communications are required (see Transmission Owner ("TO") listing below and refer to the SCADA REQUIREMENTS spreadsheet - Informative Annex #1) the DG Owner, PJM or the TO will provide and/or install a suitable SCADA Remote Terminal Unit in accordance with the specifications provided in Informative Annex #2 or an alternative mutually suitable to the DG Owner, Transmission Owner and PJM.

- The PJM TOs agree to accept the “Internet SCADA alternative” (see Informative Annex #2), in lieu of direct SCADA communications with the TO, except in circumstances where the “Internet SCADA alternative” does not meet certain TO technical requirements specified and justified by the TO.
- If the TO, PJM and DR owner mutually agree, specifications for other suitable interfaces between the DG and TO SCADA can be acceptable. Where applicable, this approach would allow a DR owner to use a SCADA protocol of their choice and provide an interface closer to the Transmission Owner’s SCADA facility. Such an installation must provide adequate communication performance, suitable to PJM and the TO.

Installation of communications facilities (internet service, leased telephone circuits, fiber optics, etc.), communications facility Operation and Maintenance, and other ongoing costs are the responsibility of the Interconnection Customer.

Installation of communications facilities (typically leased telephone circuits), communications facility Operation and Maintenance, and other ongoing costs are the responsibility of the Interconnection Customer.

PJM requires real-time telemetry data (MW and MVAR) for Capacity Resources, Energy Resources 10MW and above, or Energy Resources able to set LMP. PJM also requires interval revenue metering data (KWH and KVARH data at 5 minute intervals provided hourly).

See the following for specific interconnection requirements based on Transmission Owner Zone:

- Allegheny Power—Requirement for SCADA is determined on a case-by-case basis by Allegheny Power.
- American Electric Power—Real-time telemetry (SCADA) generally required for generation greater than 2.5 MW connected to the distribution system and all connections at transmission voltages.
- Baltimore Gas and Electric—Requires BG&E specified telemetry (periodic, not real time), installed by BG&E, for all generator interconnections.
- Commonwealth Edison Company—Requires real-time telemetry for any interconnection of 10 MW or greater, or for interconnections where transfer trip is required (generally 2.5 MW and above) for the interconnection.
- Dayton Power and Light—Determines real-time telemetry (SCADA) requirements on a case-by-case basis.
- Dominion—Requires a SCADA RTU compatible with Dominion’s SCADA system when the ratio of “Light Local Load” to Maximum Rated Generation Capacity ratio is less than 5.
- Duquesne Light Company—At DLC's discretion the Interconnection Customer can be required to install and maintain a dedicated communications link, compatible with DLC's equipment, to provide telemetry (SCADA) to DLC's Operation Center. The preferred communications protocol for RTU communications is DNP 3.0. The installed SCADA shall comply with the current NERC Cyber Security standards.

- First Energy—FE determines real time telemetry (SCADA) requirements on a case by case basis for interconnection to the radial distribution system. Real time telemetry is required for all interconnections to the Transmission System, generally 23 kV and above.
- Old Dominion Electric Cooperative—ODEC requires real-time SCADA for DG resources in the 2-10 MW range, to include MW and MVAR and status of the interconnecting circuit breaker. This does not necessarily imply a full RTU but could be a data link with the plant / unit control system. DNP 3.0 is the supported protocol.
- Orange and Rockland— All facilities over 1,000 kW connected to the distribution system must have equipment to continuously telemeter the following data to Orange and Rockland's Energy Control Center via a leased telephone line. This data will be provided through the installation of a REMOTE TERMINAL UNIT (RTU) in the Developer's facility. The RTU shall use DNP 3.0 protocol (unless otherwise stated).
- PECO Energy - Requires real-time telemetry for interconnections of 5 MW or greater.
- PHI Companies (Atlantic City Electric Co., Delmarva Power & Light Co. and Potomac Electric Power Co.)—Atlantic City Electric Co. and Delmarva Power & Light Co. require a RTU for all generator interconnections, and real-time MWH and MVH telemetry for all interconnections for which generators participate in PJM markets. For generators not participating in PJM markets real-time telemetry is required for generators 3 MW and above.

Note:
The specific location and circumstances of a generator interconnection may make telemetry necessary, even when telemetry would not ordinarily be required.

- PEPCO requires a RTU for all generator interconnections, and real time telemetry for all interconnections that participate in PJM markets. For generators not participating in PJM markets real-time telemetry is required for generators 10 MW and above.
- PPL—Requires full-time dedicated SCADA RTU compatible with PPL EU's SCADA system for interconnections 2.5 MW and above or at 69 kV and above.
- PSEG—Real-time telemetry (SCADA) requirement is determined on a case-by-case basis. Smaller MW size generator interconnections usually require a low-cost alternative system.
- UGI—Requires real-time telemetry (SCADA) compatible with the UGI SCADA system for all interconnections 1MW or greater and for all 66 kV and above interconnections.

4.1.7 Isolation Device Requirement. (Application Note 6)

When the Area EPS operating practices require an isolation device, that device must be readily accessible to the Area EPS operator, lockable in the open position, and must provide a visible break in the electrical connection between the generator and the Area EPS. The Isolation Device must be rated for the voltage and current requirements of the installation. The Isolation Device may be electrically located anywhere between the point of common coupling and the generator. However, the customer should consider the impact of the electrical location of the

Isolation Device. If the Isolation Device is electrically at or near the generator, and the Area EPS Operator uses the Isolation Device to provide clearance for worker safety, the customer will be unable to operate its generator to maintain electric supply to all or a portion of its load on the Local EPS during an outage of the Area EPS.

A draw-out breaker may be used to meet the Isolation Device requirement if it is lockable in the withdrawn position and has a visible position indicator.

For facilities interconnecting at voltages exceeding 600 volts, when required by the EDC, the Isolating Device required to allow EDC personnel to safely isolate the generator must have a ground grid designed and installed in accordance with IEEE 80 and to specifications to be provided by the EDC. This ground grid limits the ground potential rise should a fault occur during switching operations. Operation of this Isolation Device must be restricted to EDC personnel and properly trained operators designated by the Customer. Designated Customer personnel may be required to learn and adhere to the EDC's "Switching and Tagging" procedures.

4.2.1 Area EPS Faults

Area EPS Fault Protection requirement for typical interconnection: (Figures 7A, 7B and 7C on the following pages are intended to be representative of typical connections to radial and networked lines, specific requirements will be determined by PJM and the T.O during PJM Feasibility and Impact Studies on a case-by-case basis.)

Figure 7A – One-Line Diagram for a Typical Interconnection to a Radial Distribution System

Typical Protective Relaying Functional Requirements	
27	Under-voltage (3 phases, 1 phase if 50/51G can be applied)
59	Over-voltage (3 phases, 1 phase if 50/51G can be applied)
81O	Over-frequency (1 phase required)
81U	Under-frequency (1 phase required)
25	Synchronizing check (1 phase required)
32*	Power* (If required, 1 or 3 phase depending on type)
50/51**	Phase instantaneous and time overcurrent (3 phases if required), or
21**	Phase distance relay (3 phases if required)
50/51G***	Ground instantaneous and time overcurrent (1 if applicable)
* If required due to reverse power limitations. ** 50/51 or 21 but not both required.	

Typical Protective Relaying Functional Requirements
*** Only if transformer / generator connection allows ground fault current contribution to EPS ground fault

Additional Protective Relaying Functional Requirements (as Required)

- Dead line closing control (27 and/or 25 function) at EPS source breaker(s), line recloser(s), etc.
- Larger facilities may require the installation of additional equipment such as directional relaying at the substation feeding the circuit.
- Also see Application Notes 7 and 10 for transfer trip and unbalance functional requirements.
- Voltage Unbalance Protection—In accordance with ANSI C84.1, Annex D, Section D.2 Recommendation, voltage unbalance at the point of common coupling caused by the DG equipment under no load conditions shall not exceed 3% (calculated by dividing the maximum deviation from average voltage by the average voltage, with the result multiplied by 100).

Note:
The present version of IEEE 1547 is primarily intended to be applicable to interconnection of DR on radial distribution systems (Section 1.3 Limitations - “Installation of DR on radial primary and secondary distribution systems is the main emphasis of this standard,…”). From a practical standpoint, this represents an upper limit of 2.5 to 5 MW on typical 13 kV EDC distribution circuits, unless it is a dedicated circuit constructed for the sole purpose of interconnecting the DR. Larger facilities will generally require interconnection to the EDC’s sub-transmission or transmission system. These larger facilities may require additional or specific protection equipment necessary to coordinate with the EDC’s protection practices. Additional AEP Application.

In its review of the proposed small generator interconnection request, AEP may determine that a lesser percent unbalance limit is required due to voltage unbalance already present from **existing** customer loads, such as certain compressor motors and power electronic loads, in the electrical vicinity.

Figure 7B – One-Line Diagram for a Typical Interconnection to a Looped (Network) System

Typical and Additional Protective Relaying Functional Requirements

- Same as Figure 7A above and others as may be required to be compatible with and coordinate with EPS transmission system protection.

- In general, requirements developed to connect 10 MVA and smaller generation to looped networked sub-transmission systems will be more involved and diverse than those needed for radial distribution systems. Additional considerations may be required.

Figure 7C – One-Line Diagram for a Typical Interconnection to a Radial Transmission System

Typical and Additional Protective Relaying Functional Requirements

- Same as Figure 7A above and others as may be required to be compatible with and coordinate with EPS transmission system protection.

Figure 7A – One-Line Diagram for a Typical Interconnection to a Radial Distribution System

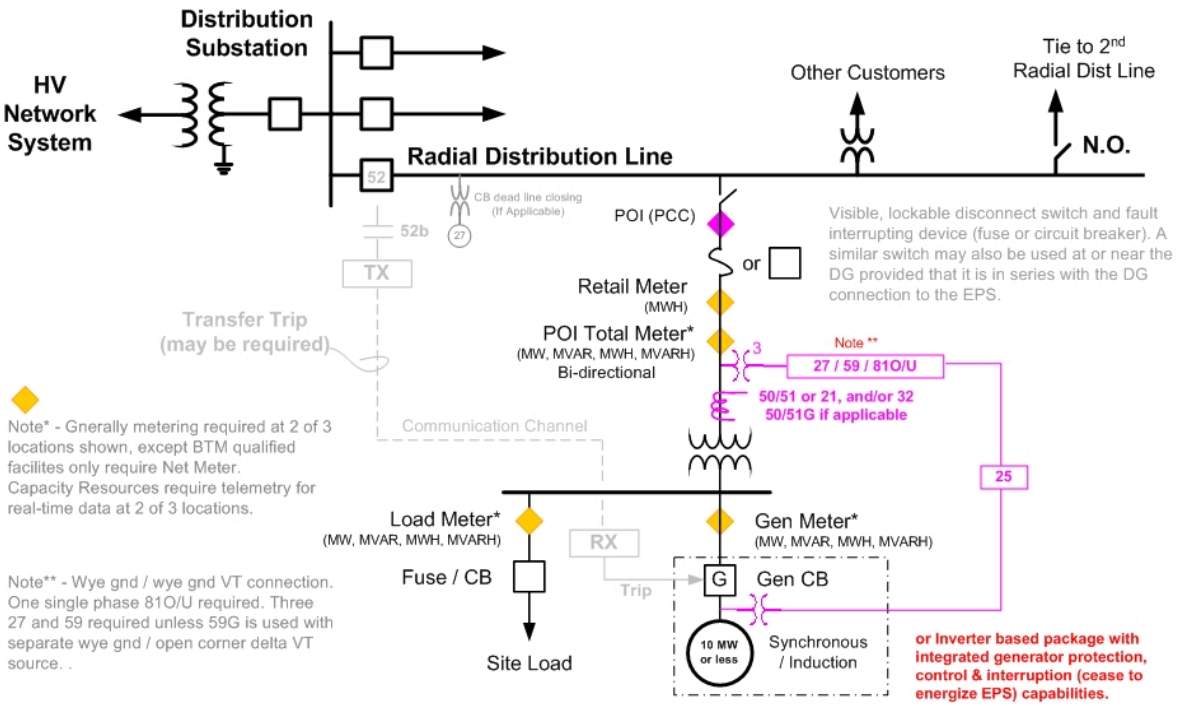

Figure 7B – One-Line Diagram for a Typical Interconnection to a Looped (Network) System

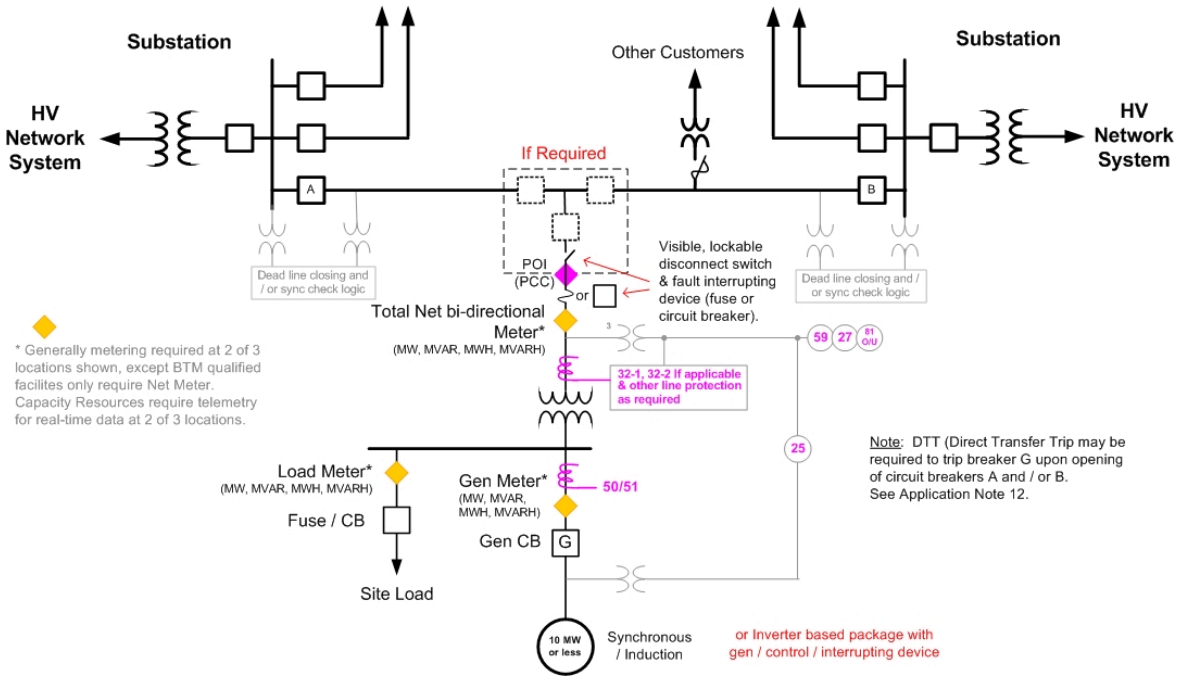

Figure 7C – One-Line Diagram for a Typical Interconnection to a Radial Transmission System

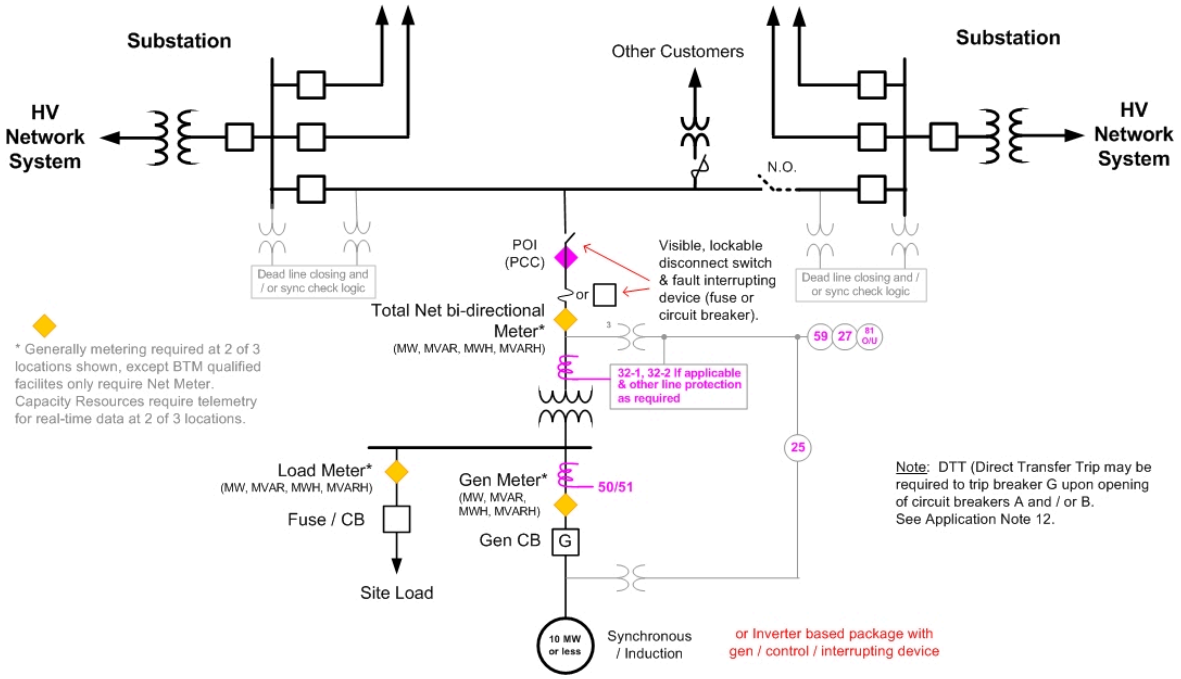

4.2.3 Voltage. (Application Note 8)

In cases where the DG interface is via an ungrounded transformer connection at the PCC, the voltage sensing must be done on the T.O. side of the transformer. This voltage sensing must be Phase - Ground connected for all three phases.

Voltage Unbalance Protection. In accordance with ANSI C84.1, Annex D, Section D.2 Recommendation, voltage unbalance at the point of common coupling caused by the DG equipment under no load conditions shall not exceed 3% (calculated by dividing the maximum deviation from average voltage by the average voltage, with the result multiplied by 100).

4.2.6 Reconnection to Area EPS. (Application Note 9)

For larger generating units, an Area EPS may require verbal communication with the System Operator before returning generation to the system.

4.3.2 Limitation of Flicker induced by DR. (Application Note 10)

Requirement 4.3.2 guidance is provided by IEEE Standard 519 and IEEE Flicker Task Force P1453. However, the requirement which must be met for 4.3.2 is to not cause voltage and /or frequency disturbances which are objectionable to other EPS customers during actual operation of DR.

4.3.3 Harmonics. (Application Note 11)

In addition to the IEEE 1547 Harmonics requirement [i.e., each DG installation must, at its PCC, meet the injected harmonic current distortion limits provided in IEEE 1547 Table 3 (excerpt IEEE 519 Table 10.3)] when multiple DG units are operating at different PCCs, each alone may meet the preceding current injection limit. However, the aggregate impact of all the DG units could still cause voltage distortion, which would impact other non-DG customers. Therefore, the aggregate voltage distortion at EACH PCC must also not exceed IEEE 519, Table 11.1. If the limits described in IEEE 519, Table 11.1 are exceeded, the offending DG is responsible for any appropriate corrective actions taken by the interconnecting transmission owner to mitigate the problem. Studies will be performed to determine if excessive harmonic distortion will occur prior to installation of the DG. However, it may not be possible to predict the net level of voltage distortion before each new DG installation on a given circuit. Voltage distortion in excess of IEEE 519 can be used as a benchmark to trigger corrective action (including disconnection of DG units) if service interference exists.

Note:
Additional PPL Application Note: PPL has a requirement for any one Customer (load, generation, etc.) to limit the voltage THD (Total Harmonic Distortion) to 2.5% or less for distribution voltages and 1.5% at 69 kV. PPL allows a smaller fixed limit for each customer thereby sharing allowable harmonic contribution rather than applying a first-come first-served principle to successive interconnection requests.

4.4.1 Unintentional Islanding. (Application Note 12)

The Unintentional Islanding requirement can be met by the following:

- Transfer trip.
- Sensitive Frequency and Voltage relay settings, with a short tripping time delay, where the maximum DR aggregate generation net output to the EPS is considerably less than the expected minimum islanded EPS load. Typically the islanded load must be greater than two to three times the maximum net islanded DR output.*
- DR certified to pass an anti-islanding test.
- Reverse or minimum power flow Relay limited.
- Other anti-islanding means such as forced frequency or voltage shifting.

* Exceptions to B above:

- PSEG—Option B only applicable to aggregate DR interconnections of 1MW and below.
- PEPCO—Option B generally not applicable for DR interconnections which export energy to the PEPCO system regardless of generation and load mismatch.

In accordance with Section 4.2.2 Area EPS reclosing coordination, a 2-second response time may not be adequate to coordinate with the Area EPS reclosing practices. This may result in damage to the generator upon reclosing of the EPS source. In some instances, on a case-by-case basis, the EPS operator may allow the reclosing time to be increased or add synchronism check supervision to provide coordination. Increasing the reclosing time in some cases will have an unreasonable impact on other customers. Other means, such as transfer trip, must then be used to insure isolation of the generator before automatic circuit reclose.

Options for Satisfying 5.1 Design and 5.2 Production Test Requirements.

- Design and Production tests requirements may be satisfied with certified equipment, although certified equipment is not required, consistent with the following criteria:
- The small generating facility equipment proposed for use separately or packaged with other equipment in an interconnection system shall be considered certified for interconnected operation if (1) it has been tested in accordance with IEEE 1547.1 and the appropriate codes and standards referenced below by any Nationally Recognized Testing Laboratory (NRTL) recognized by the United States Occupational Safety and Health Administration to test and certify interconnection equipment pursuant to the relevant codes

and standards listed below, (2) it has been labeled and is publicly listed by such NRTL at the time of the interconnection application, and (3) such NRTL makes readily available for verification all test standards and procedures it utilized in performing such equipment certification, and, with consumer approval, the test data itself. The NRTL may make such information available on its Web site and by encouraging such information to be included in the manufacturer's literature accompanying the equipment.

- The Interconnection Customer must verify that the intended use of the equipment falls within the use or uses for which the equipment was tested, labeled, and listed by the NRTL.
- Certified equipment shall not require further type-test review, testing, or additional equipment to meet the requirements of this interconnection procedure; however, nothing herein shall preclude the need for an on-site commissioning test by the parties to the interconnection nor follow-up production testing by the NRTL or periodic tests per IEEE 1547 Section 5.5.
- If the certified equipment package includes only interface components (switchgear, inverters, or other interface devices), then an interconnection customer must show that the generator or other electric source being utilized with the equipment package is compatible with the equipment package and is consistent with the testing and listing specified for this type of interconnection equipment.
- Provided the generator or electric source, when combined with the equipment package, is within the range of capabilities for which it was tested by the NRTL, and does not violate the interface components' labeling and listing performed by the NRTL, no further design review, testing or additional equipment on the customer side of the point of common coupling shall be required to meet the requirements of this interconnection procedure.
- An equipment package does not include equipment provided by the utility.
- Any equipment package approved and listed in a state by that state's regulatory body for interconnected operation in that state prior to the effective date of these small generator interconnection technical requirements shall be considered certified under these procedures for use in that state.

C.7 Relevant Codes and Standards

- IEEE 1547 Standard for Interconnecting Distributed Resources with Electric Power Systems (including use of IEEE 1547.1 testing protocols to establish conformity)
- UL 1741 Inverters, Converters, and Controllers for Use in Independent Power Systems
- IEEE Std 929-2000 IEEE Recommended Practice for Utility Interface of Photovoltaic (PV) Systems
- NFPA 70 National Electrical Code
- IEEE Std C37.90.1-1989 (R1944) IEEE Standard Surge Withstand Capability (SWC) Tests for Protective Relays and Relay Systems

- IEEE Std C37.90.2 (1995) IEEE Standard Withstand Capability of Relay Systems to Radiated Electromagnetic Interference from Transceivers
- IEEE Std C37.108-1989 (R2002) IEEE Guide for the Protection of Network Transformers
- IEEE Std C57.12.44-2000, IEEE Standard Requirements for Secondary Network Protectors
- IEEE Std C62.41.2-2002, IEEE Recommended Practice on Characterization of Surges in Low-Voltage (1000V and Less) AC Power Circuits
- IEEE Std C62.45-1992 (R2002) IEEE Recommended Practice on Surge Testing for Equipment Connected to Low-Voltage (1000V) and Less) Power Circuits
- ANSI C84.1-1995 Electric Power Systems and Equipment -Voltage Ratings (60 Hertz)
- IEEE Std 100-2000, IEEE Standard Dictionary of Electrical and Electronic
- NEMA MG 1-1998, Motors and Small Resources, Revision 3
- IEEE Std 519-1992, IEEE Recommended Practices and Requirements for Harmonic Control in Electrical Power Systems
- NEMA MG 1-2003 (Rev 2004), Motors and Generators, Revision 1

Attachment D: Small Generator (greater than 10 MW up to 20 MW) Technical Requirements and Standards

D.1 Scope

The PJM Small Generator Interconnection Applicable Technical Requirements and Standards ("Small Generator Standards – Attachment D-1 ") shall apply to all new generator interconnections, within the PJM footprint, with an aggregate size of greater than 10 MW up to 20 MW at the point of interconnection.

Attachment D-1 shall be read and construed as to be consistent with the PJM Tariff ("Tariff"). In the event of any inconsistency between the terms and conditions of Attachment D-1 and the terms and conditions of the Tariff, the terms of the Tariff shall control. All terms contained in Attachment D-1 shall be defined as defined by the Tariff. While PJM strives to ensure that the information reflected herein is complete, accurate and reliable, it expressly disclaims any warranty, whether express or implied, as to information contained. Entities relying on the information contained herein do so at their own risk.

D.2 Purpose

To align the applicable technical requirements for Small Generator Interconnections (Small Generators are 20 MW and less per PJM's FERC-approved Tariff) used within PJM with the IEEE Standard 1547 for Interconnecting Distributed Resources with Electric Power Systems to facilitate transparency for perspective Generator Interconnection Customers, pre-certification entities (see 5.1 and 5.2) and equipment manufacturers doing business within the PJM footprint.

Because IEEE Standard 1547 and PJM's Applicable Standard "Attachment H" to PJM Manual 14B are limited to a maximum of 10 MW and primarily intended for generator interconnections to radial distribution systems, PJM stakeholders, through the Small Generator Interconnection Working Group, recognized a need to fill the gap between 10 MW and 20 MW by developing a companion Applicable Standard based on the core IEEE 1547 requirements with changes and additions as required to address the larger MW size and greater diversity of Electric Power System configurations to be included.

D.3 Background and Discussion

Attachment D-3 was developed by the PJM Small Generator Interconnection Working Group ("SGIWG"). The Small Generation Standards define the uniform technical requirements that each Interconnected Transmission Owner ("ITO") and Electric Distribution Company ("EDC") require for interconnecting to their facilities. The requirements as defined herein will govern for the interconnection of distributed generation greater than 10 MW up to 20 MW. Attachment D-1

is a companion document to Attachment D: Small Generator (10 MW or Less) Technical Requirements and Standards.

ITOs and EDCs may, by mutual agreement, elect to waive certain IEEE 1547 requirements and associated exceptions and conditions stated herein, but may not add requirements to IEEE 1547 other than the exceptions and conditions contained herein. For Small Generators qualifying for interconnection under state rules, the state-approved technical requirements and procedures shall govern. In the event that a Small Generator has interconnected under state rules and thereafter elects to participate in any PJM market, such Small Generator must comply with the terms of PJM's Small Resource Interconnection Procedure Manual and these Small Generation Standards. The Small Generator must submit a completed Feasibility Study Request (Attachment "N" of the Tariff), and will be responsible for any subsequent study costs. Additionally, the Small Generator will be required to execute PJM's three-party Interconnection Service Agreement with PJM and the local Transmission Owner, and to the extent applicable, an Electric Distribution Company as the case may be.

D.4 General Application Note for Transmission System Interconnections

In its present form IEEE Standard 1547 is primarily intended to address generator interconnections of 10 MVA or less to radial distribution systems. In order to extend the use of IEEE Standard 1547 beyond this scope to include connection to transmission[2] facilities, it is necessary to clarify the meaning of Section 4.2.1 to assure that system protection requirements are compatible with the established reliability criteria used for those systems.

IEEE Standard 1547 Section 4.2.1 (Area EPS Faults) requires that “the DR unit shall cease to energize the Area EPS for faults on the Area EPS circuit to which it is connected.” For Transmission Interconnections this implies that the protection scheme(s) be compatible and coordinate with the Area EPS protection scheme(s) used for the line or substation to which it is interconnected or compatible and coordinates with new protection equipment installed due to the connection of the generation to this facility.

Generator installations greater than 10 MW are not typically interconnected to radial distribution circuits of nominal 13 kV or less. 10 MW to 20 MW generator interconnections will generally be to system voltages of 26 kV and higher which may be operated radially with normally open ties to other lines or networked and operated more similar to higher voltage transmission systems.

2 In the context used here, transmission systems are systems 69 kV or greater, or networked lower voltage systems which are used for backbone energy delivery within smaller geographic areas much the same as most 69 kV systems.

D.5 Tariff / IEEE 1547 Definition Cross-Reference

IEEE Standard 1547	Tariff
PCC (Point of Common Coupling)	POI (Point of Interconnection)
Point of DR Connection	Not Applicable
EPS (Electric Power System)	Interconnected Transmission Owner Facilities
Area EPS Operator	Interconnected Transmission Owner
Not Applicable	Transmission Provider (PJM)
DG (Distributed Generation)	Interconnected Generation Customer Facilities which are not connected to the Bulk Power Transmission System
DR (Distributed Resources)	Interconnected Generation Facility which is not connected to the Bulk Power Transmission System
Interconnection Equipment	Not Applicable
Interconnection System	Interconnection Facilities
Not Applicable	Interconnection Customer Facilities
Electric Power System, local	Not Applicable
Electric Power System, area	Not Applicable
Cease to Energize (Cessation of energy outflow capability)	Not Applicable

Note:
Illustration below is for cross-reference of Tariff and IEEE 1547 terms only.

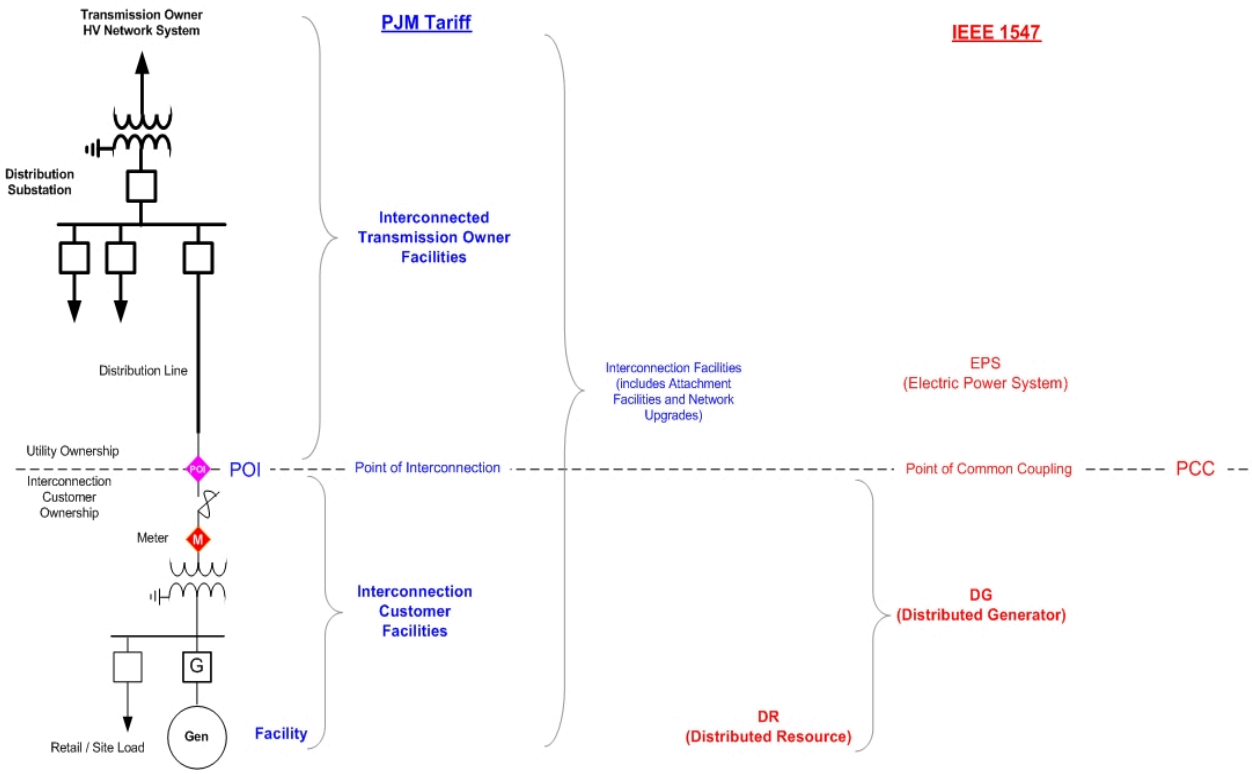

D.6 Applicable Technical Requirements and Standards

IEEE Standard 1547 shall constitute the total technical requirements and standards for interconnection of small generators greater than 10 MW up to 20 MW with the following noted exceptions, additions, and clarifications. IEEE Standard 1547.1 constitutes the requirement for test conformance to IEEE Standard 1547.

IEEE Standard Requirement		Exceptions or Additions
4.1.1	Voltage Regulation	None. See Application Note 1.
4.1.2	Integration with Area EPS Grounding	None. See Application Note 2.
4.1.3	Synchronization	None. See Application Note 3.
4.1.4.1	Distribution Secondary Grid Networks (under development)	Not applicable for generator interconnections 10 MW and above.
4.1.4.2	Distribution Secondary Spot Networks	Generally not applicable for generator interconnections of 10 MW and greater.

IEEE Standard Requirement		Exceptions or Additions
		Rare exceptions to be handled on a case-by-case basis.
4.1.5	Inadvertent Energization of the Area EPS	None.
4.1.6	Monitoring	None. See Application Note 4.
4.1.7	Isolation Device	None. See Application Note 5.
4.1.8.1	Protection from EMI	None.
4.1.8.2	Surge Withstand Performance	None.
4.1.8.3	Paralleling Device Withstand	None.
4.2.1	Area EPS Faults	PEPCO and PSEG exception for Islanding protection. See Application Notes 6, 7 & 11.
4.2.2	Area EPS Reclosing Coordination	None. See Application Note 12.
4.2.3	Voltage	None. See Application Note 7.
4.2.4	Frequency	None.
4.2.5	Loss of Synchronism	None.
4.2.6	Reconnection to Area EPS Voltage Requirement Frequency Requirement	None. See Application Note 8. None. See Application Note 8.
4.3.1	Limitation of DC Injection	None.
4.3.2	Limitation of Flicker induced by the DR	None. See Application Note 9.
4.3.4	Harmonics	PPL exception. See Application Note 10.
4.4.1	Unintentional Islanding	PEPCO and PSEG exceptions. See Application Note 11.
5.1	Design Test	None. See Application Note 13.
5.2	Production Tests	None. See Application Note 13.

IEEE Standard Requirement		Exceptions or Additions
5.3	Interconnection Installation Evaluation	None.
5.4	Commissioning Tests	None.
5.5	Periodic Tests	None.

D.6.1 Application Notes

4.1.1 Voltage Regulation. (Application Note 1)

Depending on size of generation (relative to EPS strength) and location of interconnection, the interconnected generation may be required to provide or absorb reactive power and/or follow a voltage schedule to maintain an acceptable voltage profile on the EPS with the addition of the new generating facility.

4.1.2 Integration with Area EPS grounding. (Application Note 2)

Where new transformers are required:

- AP requires a wye-grounded connection on the T.O. side of the DG step up transformer; and
- PEPCO's requirement for an isolation transformer including its configuration at 13.8 kV and above, will be determined on a case-by-case basis and will depend on the generating facility's location and system configuration.

AP and PEPCO requirements specified above do not apply if a generator is being connected to a system on the low voltage side of an existing Interconnection Customer transformer.

Other Transmission Owners within PJM will accept a delta or wye-ungrounded connection provided that adequate protection is provided by the DG to detect a ground and limit any over-voltage to an acceptable level on the TO's system. Adequate protection includes voltage monitoring on the high side of the DG main transformer using phase to ground connected VTs. Also see Application Note 5 for an additional AEP Application Note for grounding coordination related to operation of isolating devices.

4.1.3 Synchronization. (Application Note 3)

IEEE 1547 Synchronization voltage fluctuation requirement of +/- 5% is applicable as stated. Flicker requirement 4.3.2 guidance is provided by IEEE Standard 519 and IEEE Flicker Task Force P1453. However, the requirement which must be met for 4.3.2 is to not cause voltage and /or frequency disturbances which are objectionable to other EPS customers during actual operation of DR.

4.1.6 Monitoring. (Application Note 4)

Aggregate DR interconnection greater than 10 MW at a single PCC shall have SCADA provisions for monitoring its connection status, real power output, reactive power output, and voltage at the point of DR connection. (See Informative Annex #1 for specific monitored quantities required by each Area EPS Operator.)

- An Internet-based SCADA alternative (see Informative Annex #2), was developed as a reliable and economical alternative to direct SCADA communications with the Area EPS Operator. In addition to generally lower installed cost for the “Internet SCADA alternative,” the Internet ongoing communication costs may be more cost effective to other alternatives, especially those that require leased telephone circuits.
- When full-time dedicated SCADA communications are required (see Informative Annex #1) the DG Owner, PJM or the Area EPS Operator will provide and/or install a suitable SCADA Remote Terminal Unit in accordance with the specifications provided in Informative Annex #2 or an alternative mutually suitable to the DG Owner, Area EPS Operator and PJM.
- The PJM Transmission Owners (TOs) agree to accept the “Internet SCADA alternative” (see Informative Annex #2) in lieu of direct SCADA communications with the TO, except in circumstances where the “Internet SCADA alternative” does not meet certain TO technical requirements specified and justified by the TO.
- If the TO, PJM and DR owner mutually agree, specifications for other suitable interfaces between the DG and TO SCADA can be acceptable. Where applicable, this approach would allow a DR owner to use a SCADA protocol of their choice and provide an interface closer to the TO’s SCADA facility. Such an installation must provide adequate communication performance, suitable to PJM and the TO.
- The Interconnection Customer is responsible for the protection of the communications circuit in accordance with IEEE 487-2000, or later revisions, and any additional requirements of the communications circuit provider.
- Area EPS Operators will typically require SCADA monitoring at the Point of Interconnection as well as at the generating units.

4.1.7 Isolation Device Requirement. (Application Note 5)

When the Area EPS operating practices require an isolation device, that device must be readily accessible to the Area EPS operator, lockable in the open position, and must provide a visible break in the electrical connection between the generator and the Area EPS. The Isolation Device must be rated for the voltage and current requirements of the installation. The Isolation Device may be electrically located anywhere between the point of common coupling and the generator. However, the customer should consider the impact of the electrical location of the Isolation Device. If the Isolation Device is electrically at or near the generator, and the Area EPS Operator uses the Isolation Device to provide clearance for worker safety, the customer will be unable to operate their generator to maintain electric supply to all or a portion of their load on the Local EPS during an outage of the Area EPS.

A drawout breaker may be used to meet the Isolation Device requirement if it is lockable in the withdrawn position and has a visible position indicator.

The Isolating Device required to allow Area EPS Operator personnel to safely isolate the generator must have a ground grid designed and installed in accordance with IEEE 80 and to specifications to be provided by the EDC. This ground grid limits the ground potential rise should a fault occur during switching operations. Operation of this Isolation Device must be restricted to the Area EPS Operator's personnel and properly trained operators designated by the Customer. Designated Customer personnel may be required to learn and adhere to the Area EPS Operator's "Switching and Tagging" procedures.

4.2.1 Area EPS Faults. (Application Note 6, 7, & 11)

Area EPS Fault Protection requirement for typical interconnection: (Figures 6A, 6B and 6C on the following pages are intended to be representative of typical connections to radial and networked lines. Specific requirements will be determined by PJM and the Area EPS Operator during PJM Feasibility and Impact Studies on a case-by-case basis.)

Figure 6A – One-Line Diagram for a Typical Interconnection to a Radial Distribution System

Typical Protective Relaying Functional Requirements	
27	Under-voltage (3 phases, 1 phase if 50/51G can be applied)
59	Over-voltage (3 phases, 1 phase if 50/51G can be applied)
81O	Over-frequency (1 phase required)
81U	Under-frequency (1 phase required)
25	Synchronizing check (1 phase required)
32*	Power* (If required, 1 or 3 phase depending on type)
50/51**	Phase instantaneous and time overcurrent (3 phases if required), or
21**	Phase distance relay (3 phases if required)
50/51G***	Ground instantaneous and time overcurrent (1 if applicable)
* If required due to reverse power limitations. ** 50/51 or 21 but not both required. *** Only if transformer / generator connection allows ground fault current contribution to EPS ground fault.	

Additional Protective Relaying Functional Requirements (as Required)

- Dead line closing control (27 and / or 25 function) at EPS source breaker(s), line recloser(s), etc.

- Larger facilities may require the installation of additional equipment such as directional relaying at the substation feeding the circuit.
- Also see Application Notes 7 and 11 for transfer trip and unbalance functional requirements.
- Voltage Unbalance Protection. In accordance with ANSI C84.1, Annex D, Section D.2 Recommendation, voltage unbalance at the point of common coupling caused by the DG equipment, under no load conditions shall not exceed 3% (calculated by dividing the maximum deviation from average voltage by the average voltage, with the result multiplied by 100).

Note:
The present version of IEEE 1547 is primarily intended to be applicable to interconnection of DR on radial distribution systems (Section 1.3 Limitations - "Installation of DR on radial primary and secondary distribution systems is the main emphasis of this standard,…"). From a practical standpoint, this represents an upper limit of 2.5 to 5 MW on typical 13 kV EDC distribution circuits, unless it is a dedicated circuit constructed for the sole purpose of interconnecting the DR. Larger facilities will generally require interconnection to the EDC's sub-transmission or transmission system. These larger facilities may require additional or specific protection equipment necessary to coordinate with the EDC's protection practices.

Additional AEP Application Note: In its review of the proposed small generator interconnection request, AEP may determine that a lesser percent unbalance limit is required due to voltage unbalance already present from existing customer loads, such as certain compressor motors and power electronic loads, in the electrical vicinity.

Figure 6B – One-Line Diagram for a Typical Interconnection to a Looped (Network) System

- Typical and Additional Protective Relaying Functional Requirements
- Same as Figure 6A above and others as may be required to be compatible with and coordinate with EPS transmission system protection.
- In general, line protection requirements to connect generation greater than 10MW to looped networked sub-transmission systems will be more involved and diverse than those needed for connection to radial distribution systems. Additional considerations may be required.

Figure 6C – One-Line Diagram for a Typical Interconnection to a Radial Transmission System

- Typical and Additional Protective Relaying Functional Requirements
- Same as Figure 6A above and others as may be required to be compatible with and coordinate with EPS transmission system protection.

Figure 6A – One-Line Diagram for a Typical Interconnection to a Radial Distribution System

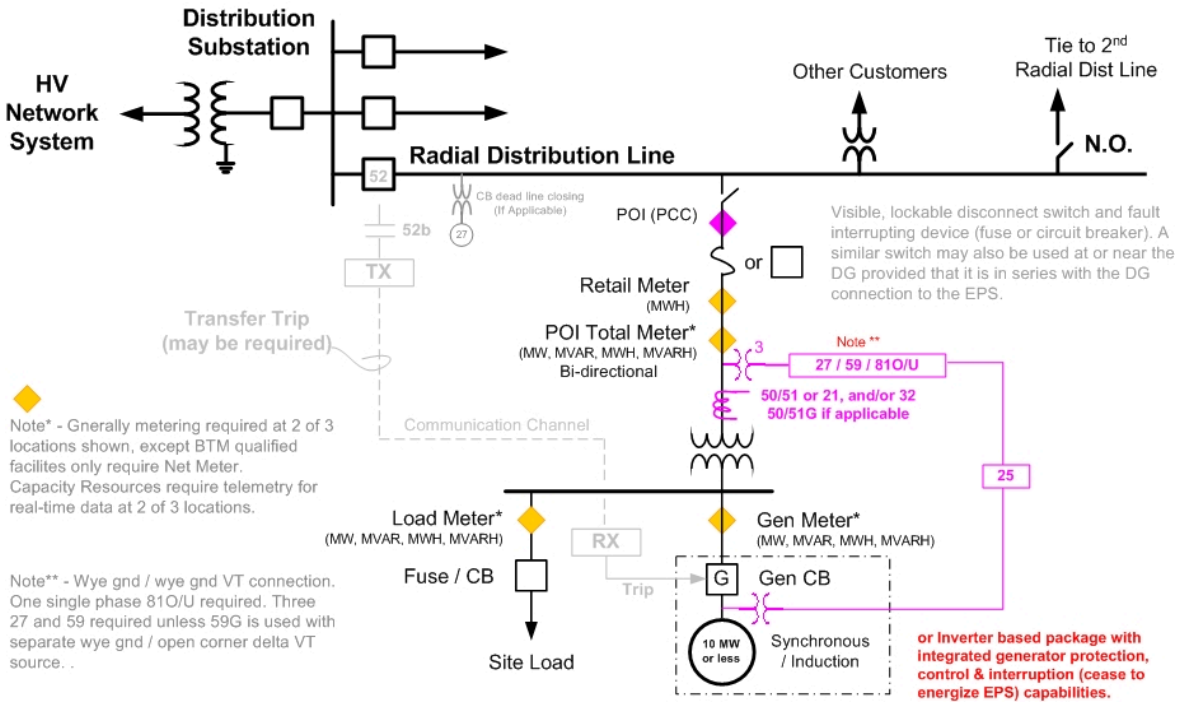

Figure 6B – One-Line Diagram for a Typical Interconnection to a Looped (Network) System

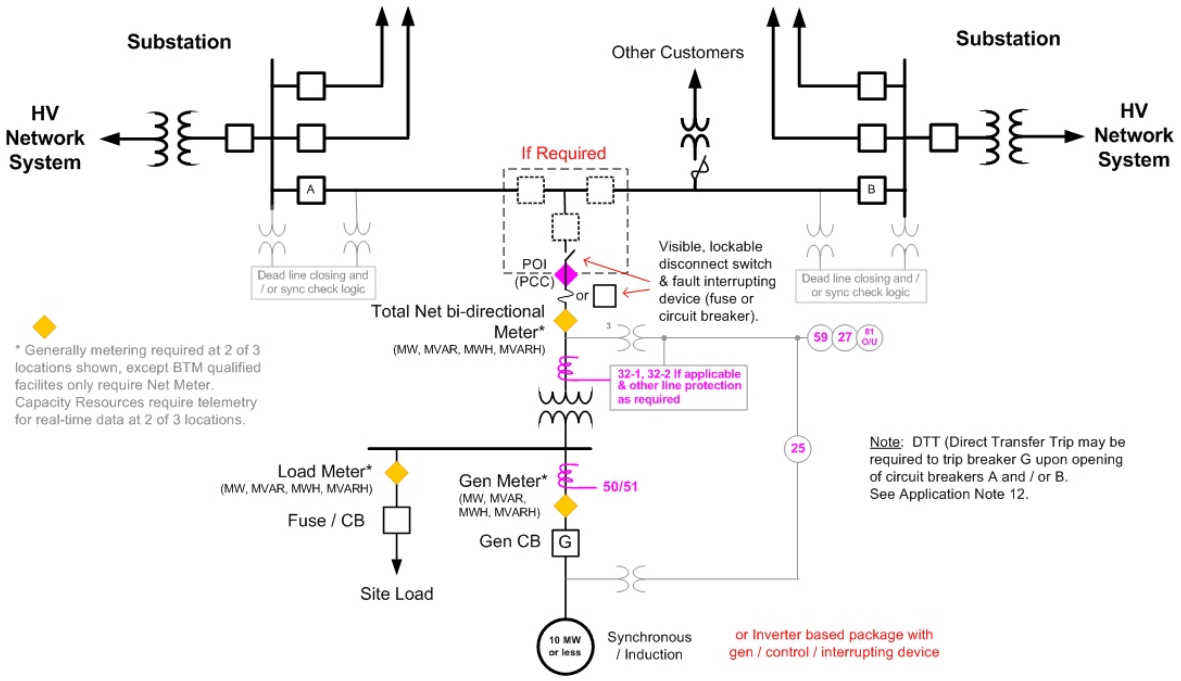

Figure 6C – One-Line Diagram for a Typical Interconnection to a Radial Transmission System

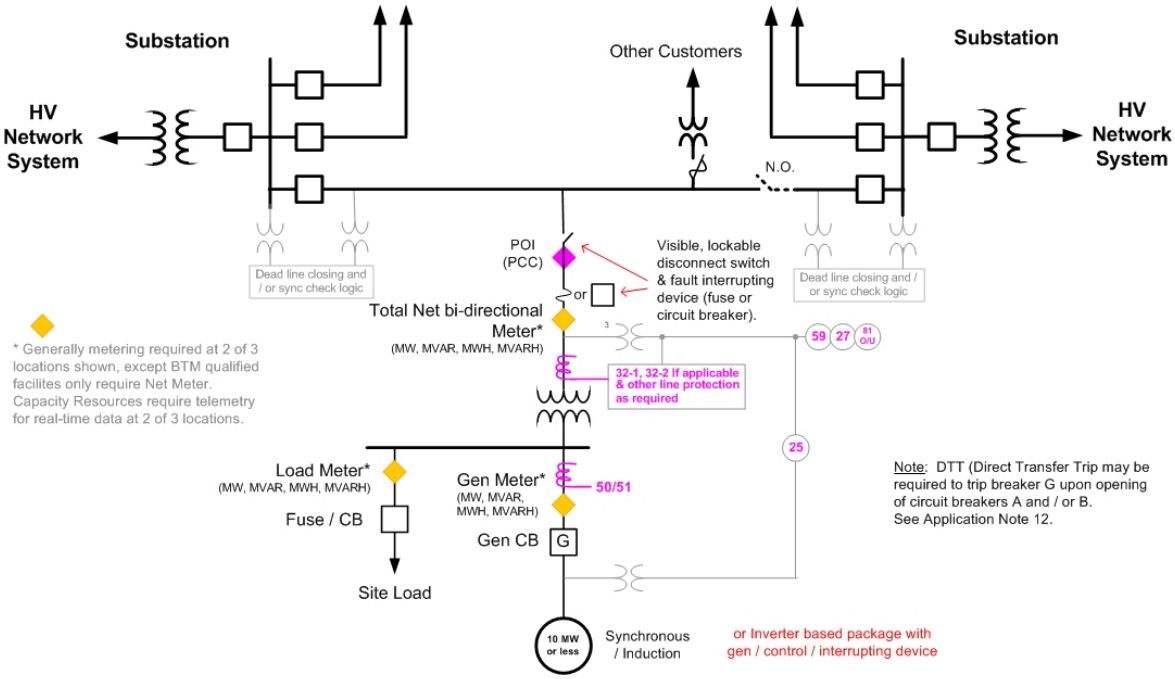

4.2.2 Area EPS Reclosing Coordination. (Application Note 12)

In accordance with Section 4.2.2 Area EPS reclosing coordination, a 2-second response time may not be adequate to coordinate with the Area EPS reclosing practices. This may result in damage to the generator upon reclosing of the EPS source. In some instances, on a case-by-case basis, the EPS operator may allow the reclosing time to be increased or add synchronism check supervision to provide coordination. Increasing the reclosing time in some cases will have an unreasonable impact on other customers. Other means, such as transfer trip, must then be used to insure isolation of the generator before automatic circuit reclose.

Options for Satisfying 5.1 Design and 5.2 Production Test Requirements. (Application Note 13)

Design and Production tests requirements may be satisfied with certified equipment, although certified equipment is not required, consistent with the following criteria:

- The small generating facility equipment proposed for use separately or packaged with other equipment in an interconnection system shall be considered certified for interconnected operation if (1) it has been tested in accordance with IEEE 1547.1 and the appropriate codes and standards referenced below by any Nationally Recognized Testing Laboratory (NRTL) recognized by the United States Occupational Safety and Health Administration to test and certify interconnection equipment pursuant to the relevant codes and standards listed below, (2) it has been labeled and is publicly listed by such NRTL at

the time of the interconnection application, and (3) such NRTL makes readily available for verification all test standards and procedures it utilized in performing such equipment certification and with consumer approval, the test data itself. The NRTL may make such information available on its Web site and by encouraging such information to be included in the manufacturer's literature accompanying the equipment.

- The Interconnection Customer must verify that the intended use of the equipment falls within the use or uses for which the equipment was tested, labeled, and listed by the NRTL.
- Certified equipment shall not require further type-test review, testing, or additional equipment to meet the requirements of this interconnection procedure; however, nothing herein shall preclude the need for an on-site commissioning test by the parties to the interconnection nor follow-up production testing by the NRTL or periodic tests per IEEE 1547 Section 5.5.
- If the certified equipment package includes only interface components (switchgear, inverters, or other interface devices), then an interconnection customer must show that the generator or other electric source being utilized with the equipment package is compatible with the equipment package and is consistent with the testing and listing specified for this type of interconnection equipment.
- Provided the generator or electric source, when combined with the equipment package, is within the range of capabilities for which it was tested by the NRTL, and does not violate the interface components' labeling and listing performed by the NRTL, no further design review, testing or additional equipment on the customer side of the point of common coupling shall be required to meet the requirements of this interconnection procedure.
- An equipment package does not include equipment provided by the utility.
- Any equipment package approved and listed in a state by that state's regulatory body for interconnected operation in that state prior to the effective date of these small generator interconnection technical requirements shall be considered certified under these procedures for use in that state.

4.2.3 Voltage. (Application Note 7)

In cases where the DG interface is via an ungrounded transformer connection at the PCC, the voltage sensing must be done on the T.O. side of the transformer. This voltage sensing must be Phase - Ground connected for all three phases.

Voltage Unbalance Protection. In accordance with ANSI C84.1, Annex D, Section D.2 Recommendation, voltage unbalance at the point of common coupling caused by the DG equipment, under no load conditions shall not exceed 3% (calculated by dividing the maximum deviation from average voltage by the average voltage, with the result multiplied by 100).

4.2.6 Reconnection to Area EPS. (Application Note 8)

For larger generating units, an Area EPS may require verbal communication with the System Operator before returning generation to the system.

4.3.2 Limitation of Flicker induced by DR. (Application Note 9)

Requirement 4.3.2 guidance is provided by IEEE Standard 519 and IEEE Flicker Task Force P1453. However, the requirement that must be met for 4.3.2 is to not cause voltage and /or frequency disturbances that are objectionable to other EPS customers during actual operation of DR.

4.3.3 Harmonics. (Application Note 10)

In addition to the IEEE 1547 Harmonics requirement (i.e., each DG installation must, at its PCC, meet the injected harmonic current distortion limits provided in IEEE 1547 Table 3 [excerpt IEEE 519 Table 10.3]) when multiple DG units are operating at different PCCs, each alone may meet the preceding current injection limit; however, the aggregate impact of all the DG units could still cause voltage distortion that would adversely impact other non-DG customers. Therefore, the aggregate voltage distortion at EACH PCC must also not exceed IEEE 519 limits. If the limits described in IEEE 519 are exceeded, the offending DG (in most cases the last to connect) is responsible for any appropriate corrective actions taken by the interconnecting transmission owner to mitigate the problem. Studies will be performed to determine if excessive harmonic distortion will occur prior to installation of the DG. However, it may not be possible to predict the net level of voltage distortion before each new DG installation on a given circuit. Voltage distortion in excess of IEEE 519 can be used as a benchmark to trigger corrective action (including disconnection of DG units) if service interference exists.

Note:
Additional PPL Application Note: PPL has a requirement for any one Customer (load, generation, etc.) to limit the voltage THD (Total Harmonic Distortion) to 2.5% or less for distribution voltages and 1.5% at 69 kV. PPL allows a smaller fixed limit for each customer, thereby sharing allowable harmonic contribution rather than applying a first-come first-served principle to successive interconnection requests.

4.4.1 Unintentional Islanding. (Application Note 11)

The Unintentional Islanding requirement can be met by the following:

- Transfer trip.
- Sensitive Frequency and Voltage relay settings, with a short tripping time delay, where the maximum DR aggregate generation net output to the EPS is considerably less than the expected minimum islanded EPS load. Typically, the islanded load must be greater than two to three times the maximum net islanded DR output.*
- DR certified to pass an anti-islanding test.
- Reverse or minimum power flow relay limited.

- Other anti-islanding means such as forced frequency or voltage shifting.

* Exceptions to B above:

- PSEG – Option B only applicable to aggregate DR interconnections of 1MW and below.
- PEPCO – Option B generally not applicable for DR interconnections that export energy to the PEPCO system regardless of generation and load mismatch.

D.7 Relevant Codes and Standards

- IEEE 1547 Standard for Interconnecting Distributed Resources with Electric Power Systems (including use of IEEE 1547.1 testing protocols to establish conformity)
- UL 1741 Inverters, Converters, and Controllers for Use in Independent Power Systems
- IEEE Std 929-2000 IEEE Recommended Practice for Utility Interface of Photovoltaic (PV) Systems
- NFPA 70 National Electrical Code
- IEEE Std C37.90.1-1989 (R1944) IEEE Standard Surge Withstand Capability (SWC) Tests for Protective Relays and Relay Systems
- IEEE Std C37.90.2 (1995) IEEE Standard Withstand Capability of Relay Systems to Radiated Electromagnetic Interference from Transceivers
- IEEE Std C37.108-1989 (R2002) IEEE Guide for the Protection of Network Transformers
- IEEE Std C57.12.44-2000, IEEE Standard Requirements for Secondary Network Protectors
- IEEE Std C62.41.2-2002, IEEE Recommended Practice on Characterization of Surges in Low-Voltage (1000V and Less) AC Power Circuits
- IEEE Std C62.45-1992 (R2002) IEEE Recommended Practice on Surge Testing for Equipment Connected to Low-Voltage (1000V) and Less) Power Circuits
- ANSI C84.1-1995 Electric Power Systems and Equipment -Voltage Ratings (60 Hertz)
- IEEE Std 100-2000, IEEE Standard Dictionary of Electrical and Electronic
- NEMA MG 1-1998, Motors and Small Resources, Revision 3
- IEEE Std 519-1992, IEEE Recommended Practices and Requirements for Harmonic Control in Electrical Power Systems
- NEMA MG 1-2003 (Rev 2004), Motors and Generators, Revision 1

Attachment E: Generator Reactive Deficiency Mitigation Process

E.1 Scope

The mitigation process is to address a reactive deficiency of an existing synchronous generator caused by an increase of its output (capacity or energy) resulting in that the generator reactive capability cannot meet the existing PJM power factor requirements as stated in the Tariff. The mitigation process and the associated business rules will also be applied to all new interconnection requests regarding an increase of capacity or energy to an existing generator.

The mitigation process is not intended for:

- Wind or non-synchronous generators,
- Existing generators not requesting an increase of capacity or energy,
- Previous requests for capacity or energy increases

The process is in compliance with the existing Tariff requirements and the associated business rules and does not require a change in the existing Tariff.

Reactive Deficiency Definition

A Reactive Deficiency is defined as the difference between the Mvar capability of a generator after the upgrade for meeting the PJM power factor requirements and the actual Mvar capability of a generator after the requested increase in capacity or energy.

For existing generators that do not have a signed FERC Proforma Interconnection Service Agreement (ISA), the Mvar capability before the upgrade is the grandfathered Mvar capability determined by PJM. For generators that have a signed ISA, the Mvar capability before the upgrade is determined by the Mvar for meeting the power factor requirements as stated at Part VI, Att. O, App. 2, Section 4.7.1 of the Tariff.

For the incremental MW increase, the corresponding power factor requirements can be calculated according to the requirements stated at Part VI, Att. O, App. 2, Section 4.7.1.2 of the Tariff. Hence, the Mvar capability of a generator after the upgrade for meeting the PJM power factor requirements is defined as the sum of the grandfathered Mvar capability or the Mvar requirements stated in the Tariff and the Mvar requirement corresponding to the incremental MW increase.

After the upgrade, the actual Mvar capability of the generator is the Mvar, defined by the generator's reactive capability curve, corresponding to the Maximum Facility Output of the generator before the upgrade plus the incremental MW increase.

The reactive deficiency, if any, is determined during the Feasibility and the System Impact Study phases of an interconnection request regarding an increase of capacity or energy to an existing generator. The Interconnection Customer will be notified of the deficiency and the proposed mitigation before the execution of the Construction or Interconnection Service Agreement.

Mitigation Process

Currently, the Tariff allows the Interconnection Customer, at its expense, to install power factor correction or other equipment at the generation plant to mitigate the reactive deficiency and to enable the generator to meet the PJM reactive power design criteria during operation. (Tariff at Part VI, Att. O, App. 2, Section 4.7.3) If the Interconnection Customer fails to mitigate the reactive deficiency, PJM can request the affected Transmission Owner to install Static Var Compensator (SVC) or similar dynamic reactive devices, at the Interconnection Customer's expense in the form of a Reactive Deficiency Charge, to mitigate the identified reactive deficiency. A shunt capacitor application could be considered but its application will require PJM review on a case by case basis.

For a generator reactive deficiency less than 50 Mvar, the Reactive Deficiency Charge will be equal to the reactive deficiency (in Mvar) multiplied by the most recent average cost estimates (in $/Mvar) for installing SVCs on the PJM system. There will be two SVC cost estimates to be developed and updated annually by PJM – one for installations at or above 230kV and one for installations below 230kV. The applicable deficiency charge is based on the voltage at the high side of the generator step up transformer. In the event that a shunt capacitor application is allowed, the charge will be based on the most recent cost of similar shunt capacitor installation.

For a generator reactive deficiency greater than or equal to 50 Mvar, the affected Transmission Owner will be responsible to provide either the cost estimate (in $/Mvar) for installing a SVC in its system which will be used to calculate the Reactive Deficiency Charge or the cost estimate (in $) of a specific SVC or SVCs necessary to mitigate the reactive deficiency as determined by PJM and the affected Transmission Owner in the System Impact Study.

Reactive Deficiency Charge Payments

The Reactive Deficiency Charges can be paid in cash or via a letter of credit. The collected charges will be used to fund reactive projects in the Transmission Owner's zone in which the Interconnection Customer's generator is located. The affected Transmission Owners shall be responsible to construct, own and maintain these reactive projects.

If the Reactive Deficiency Charge for an individual Interconnection Request is less than $2M and is insufficient to fund a planned reactive project, PJM can choose to use the collected charge to provide partial funding to this project. Alternatively, PJM can hold the collected charges in an account until sufficient funds have been collected to fund the entire project.

If the Reactive Deficiency Charge for an individual Interconnection Request is more than the cost of a planned reactive project, PJM can choose to use the collected charge to fund this

project and hold the remaining fund in cash (not to exceed $2M) or in a letter of credit as a security for use to fund future reactive projects. These funds will be used as soon as a reactive upgrade has been identified. Alternatively, PJM can develop a different reactive project to be funded entirely by the collected charge.

If the Reactive Deficiency Charge is more than $2M and a reactive project has not been developed, PJM will require the Interconnection Customer to provide a letter of credit for use to fund a reactive upgrade as soon as it has been identified.

Review of and Modification to the Mitigation Process

NERC standards require that PJM, as the Transmission Operator, shall acquire sufficient reactive resources within its area to protect the voltage levels under normal and contingency conditions. PJM will continue to assess the reactive capability of the system and serve as the backstop to recommend modifications to the mitigation process and the associated business rules when and if there are insufficient reactive resources on the system to maintain system reliability.

Attachment F: SCADA Requirements by Transmission Owner Region

	MW and Voltage Threshold for SCADA Requirement		Must match Legacy SCADA[1]	SCADA POINTS													
	Distribution	Transmission		Gen[2] CB Control	PQ data[3]	CB Status	Volts	TT Status	Amps	MW	MVAR	MWH	MVARH	Harmonics	Freq.	V Flicker	Sag & Swell
PJM	All Capacity Resources, Energy Resources >10 MW and all Resources able to set LMP.	All Capacity Resources, Energy Resources >10 MW and all Resources able to set LMP.	No	No	No	No	No	No	No	Yes	Yes	Yes	Yes	No	No	No	No
AE	3MW & above	3MW & above	No	No	No	Yes	Yes	No	Yes	Yes	Yes	Yes	Yes	No	No	No	No
AP	case by case basis	All require full SCADA & RTU	No	No	Yes	Yes	Yes (3ph)	No	Yes (3ph)	Yes	Yes	Yes	No	Y-32 orders	No	Yes	Yes
AEP	generally > 2MW	All	No	Yes - trip only	Yes	Yes	No	No	No	Yes	Yes	Yes	No	No	No	No	No
BG&E	All	All	No	Yes - trip only	Yes	Yes	No	Yes	No	Yes	Yes	Yes	No	No	No	No	No
ComEd	2.5MW & up if TT is req'd or 10MW & up	All	No	No	Yes	Yes	Yes	Yes	No	Yes	Yes	Yes	No	Yes	Yes	Yes	Yes
Dayton	As determined by Dayton	As determined by Dayton	No	Yes	No	Yes	No	No	No	Yes	Yes	Yes	No	No	No	No	No
Delmarva	3MW & above	3MW & above	No	No	No	Yes	Yes	No	Yes	Yes	Yes	Yes	Yes	No	No	No	No
Dominion	If Local Light load to Gen MWs ratio < 5	3MW & above	No	Yes - Trip only	No	Yes	Yes	Yes	Yes	Yes	Yes	Yes	No	No	No	No	No
Duquesne	Case by case, all 5 MW & above	1 MW & above	Yes	No	No	Yes	Yes	No	Yes	Yes	Yes	Yes	No	No	No	No	No
FE	case by case basis	All	No	Yes - trip only	No	Yes	Yes	Yes	Yes	Yes	Yes	Yes	No	No	No	No	No
ODEC	2 MW & above	2 MW & above	No	No	No	Yes	No	Yes	No	Yes	Yes	Yes	No	No	No	No	No
O&R	1 MW & above	All	No	No	No	Yes	No	No	No	Yes	Yes	Yes	No	No	Yes	No	No
PECO	5 MW & above	5 MW & above	No	No	Yes	Yes	Yes	Yes	No	Yes	Yes	Yes	No	No	No	No	No
PEPCO	All - case by case exceptions	All - case by case exceptions	No	Yes - Trip only	Yes	Yes	Yes	No	Yes	Yes	Yes	Yes	No	No	No	No	No
PPL	2.5 MW & above	All - 69 kV & above	Yes	Yes - Trip only	No	Yes	Yes	Yes	Yes	Yes	Yes	Yes	No	No	Yes	No	No
PSEG	case by case basis	All	No	Yes - Trip only	No	Yes	Yes	Yes	Yes	Yes	Yes	Yes	No	No	No	No	No
UGI	1 MW & above	1 MW & above, and All 66 kV & above	Yes	Yes - Trip only	No	Yes	Yes (3ph)	No	Yes (3ph)	Yes	Yes	Yes	No	No	Yes	No	No

1 PPL and Duquesne (69kV and above) and UGI (1MW and above or 66kV and above) require that customer matches their company's SCADA equipment. SGIWG Internet option not permitted.
2 May be generator CBs (interrupting devices) and/or main CB (interrupting device)
3 May also require installation of Power Quality monitoring device

Attachment G: Surplus Interconnection Study Data

G.1 Scope

This Surplus Interconnection Study data attachment to Manual 14G is intended to provide a listing of the data which is required so that a Surplus Interconnection Customer may complete their submission through Queue Point using the link provided below. This listing of data is required is not exhaustive since the required data fields in Queue Point will change depending on the selections made by the user. Completion of the data requirements through Queue Point is one of the requirements for a Surplus Interconnection Request to be deemed a valid request.

Link location for Queue Point:

https://pjm.com/planning/services-requests/new-service-requests.aspx

G.2 Data Requirements for Surplus Interconnection Studies

The data required for the Surplus Interconnection Study must be submitted to ensure proper modeling of Surplus Interconnection Requests. Surplus Interconnection Studies are conducted to confirm that there are no new network upgrades required to accommodate the requests, no impacts affecting the determination of what upgrades are necessary for the New Service Customers in the New Service Queue and no material impacts on the transmission system with regards to short circuit capability limits, steady-state thermal and voltage limits or dynamic system stability response, given the addition of your Surplus Interconnection generation on to the PJM network. The data that is submitted is required to perform the power flow, short circuit and dynamic simulation analyses which are necessary for the study.

PJM uses the following programs to perform the System Impact Study Analysis:

1. PSS/E from PTI, Inc. (power flow and dynamic simulation)
2. Aspen from Advanced Systems for Power Engineering, Inc. (short circuit)

All data must be provided on an individual unit basis in Queue Point. If the final unit specifications are not certain an approximation must be made. When more information is available, the Surplus Interconnection Customer must provide an update to PJM so that the typical model may be replaced with a detailed model based on the actual unit purchased.

For a listing of the Surplus Interconnection Study data requirements, which are similar to the System Impact Study data requirements, refer to the System Impact Study data form in Attachment B-2 of this manual.

Revision History

Revision 8 (07/26/2023):

- Manual 14G updates to incorporate Interconnection Process Reform Tariff changes filed in Docket ER22-2110-000.
  - Introduction section was updated to include applicability language.

Revision 7 (10/20/2021):

The following sections were updated to clarify and more adequately document processes related to Behind the Meter Generation business rules on status changes:

- Section 1.6 - Updated terminology to ensure consistency with the Behind the Meter Generation definition in the OATT.
- Section 1.6.1 -Updated to clarify information required in generation interconnection request to designate capability as Generation Capacity Resource and/or Energy Resource.

Administrative Change (03/16/2021):

- Updated document ownership from Jason Connell to Jason Shoemaker

Revision 06 (09/01/2020):

Manual 14G changes to incorporate PJM's FERC Order 845 Second Compliance Filing Tariff Changes. The following sections were impacted:

- Sections 1.9, 1.9.1 and 1.9.2 - Added sections outlining the process for evaluating Surplus Interconnection Requests
- Section 4.5 - Clarified that an Interconnection Customer must submit to PJM in writing any modification to its project
- Section 4.5.3 – Added new section that outlines the process for evaluating requests to incorporate technological advancements
- Attachment G – Added new attachment that outlines the data requirements for Surplus Interconnection Requests.

Revision 05 (07/01/2020):

The following changes were identified as part of the manual periodic review:

- Section 1.1 - updated the references to PJM Manuals to align with their current titles
- Section 1.3 - updated New Services Queue Swim Lane diagram to improve readability
- Section 2.1 - updated section title for consistency

The clarifying changes were identified as part of the manual periodic review:

- Section 2.2 - added clarification on the existing requirement for submittal of one-line diagrams stamped by a Professional Engineer in Tariff Attachment Y section 8. One-line diagrams must be stamped by a Professional Engineer licensed in the state where the generating facility is located.
- Section 2.4 - added clarification on site control requirements to indicate that developers are prohibited from submitting evidence of site control of the same land for multiple queue requests unless the total size of such land is adequate to support all facilities contemplated by all the queue positions.

Revision 04 (04/01/2020):

Manual 14G updates to incorporate FERC Order 845 and 845-A Tariff changes:

- Capitalized reference to Generating Facility in Section 2.4 to indicate that the term is a defined term in the Tariff
- Added new section 1.8: Service below Generating Facility Capability

Manual 14G administrative changes:

- Updated the dynamic model study requirements Attachment A-1 Feasibility Study Data Form and Attachment B-2 System Impact Study Data form to align with current PJM process

Revision 03 (12/19/2019):

- Section 2.2: Modified to include tendering a WMPA within 90 days of receipt of a non-FERC jurisdictional Attachment Y that has no identified Transmission System Impacts.

Revision 02 (06/27/2019):

Manual 14G Updates and Corrections to Links/References

- Section 1.7 Demand Response: Updated Content
- Section 2.4 Site Control:
  - **Term** for Site Control must be 3 years (*2 years for 20 MW or less*) commencing on the first day of the New Services Queue in which the Interconnection Customer submits its Generation Interconnection Request.
  - **Extensions** to site control must have been already exercised by the Developer at the time site control evidence is provided to PJM. *(If initial term is less than the required 2 or 3 year term)*
- Attachment B-2: System Impact Study Data Form: Stability Models
  - Modified Section on Stability Models to be consistent with PJM requirements to meet the following NERC Standards:
    - *MOD 26 – Plant Modeling: Volt/VAR Control*

        - *MOD 27 – Plant Modeling: Power/Frequency Control*
        - *MOD 32 – Data for Power System Modeling and Analysis*
    - References link to NERC's Acceptable Models List
- ***Corrections to References/Links:***
    - Sections Section 2, Attachments A, A-1, B, B-2 and C6: Corrected Queue Point Link
    - Section 4.5: Removed reference to PJM Manual
    - Section 5.3: Removed incorrect reference banner for System Impact Studies
    - Section 5.5: Removed incorrect Attachment reference.

Revision 01 (01/24/2019):

- Updated manual owner from Dave Egan to Jason Connell
- Updated Attachment A-1 and B-2 to include latest User Defined Model List for Wind Turbines and Inverter Based Resources

Revision 0 (07/26/2018):

New Manual 14G is a division out of Manual 14A. Manual 14A, Revision 23 was separated into two manuals:

- Updated Manual 14A: New Services Requests Study Process
    - Maintained general application procedures, study process and agreements tendered for any New Services Customer type in the updated Manual 14A.
    - Added new Section 1 Overview
- New Manual 14G: Generation Interconnection Requests
    - Moved requirements specific to generator interconnection requests to this new manual
    - Added new Section 1 Overview
    - Added new Section 3 for Reports and Agreements
    - Added new Section 6 for Large Generation Interconnection Requests
    - Moved generator-specific Attachments from M14A to new M14G

Revision 00 (07/26/2018):

- This document is the initial release of the PJM Manual for Generation Interconnection Requests