PJM Manual 01:

Control Center and Data Exchange Requirements

Revision: 49

Effective Date: October 31, 2024

Prepared By
System Operations Division

PJM © 2024

Table of Contents

Table of Exhibits 4

Approval 5

Current Revision 6

Introduction 7

About PJM Manuals 7
About This Manual 7
Using This Manual 8

Section 1: PJM Systems 9

1.1 Energy Management System (EMS) 10
1.2 Virtual Backup Control Center (VBUCC) 11
1.3 Synchrophasor System 12
1.4 Data Historian System 12
1.5 ExSchedule 12
1.6 Markets Gateway 12
1.7 Dispatch Management Tool (DMT) 13
1.8 Open Access Same-time Information System (OASIS) 13
1.9 Other PJM Tools (Power Meter, InSchedule, DR Hub, FTR Center) 13
1.10 Planning Systems 14

Section 2: Member Control Center Requirements 15

2.1 PJM Control Center Categories 15
2.2 PJM Member Data Exchange 16
2.3 Computer System Requirements 17
2.4 Communications Requirements 21
2.5 Facilities Requirements 21
2.6 Control Center Staffing 27
2.7 PJM Member Back Up Capability Required to Support PJM in its TOP Role 28
2.8 Control Center, EMS or Networking Changes Communication 29

Section 3: Data Exchange Requirements 30

3.1 Introduction 30
3.2 Energy Management System (EMS) Data Exchange 30
3.3 Synchrophasor System Data Exchange 38
3.4 OASIS Information Exchange 39
3.5 EMS Backup Communications 40
3.6 Real-Time Analysis Monitoring Requirements for System Security 40
3.7 Dispatching Requirements 42
3.8 Planning, Coordination and Notification of System Changes and Events 43

Section 4: Interpersonal Communication Capability 51

4.1 Dispatch Voice & Facsimile Communications 51
4.2 Alternative Interpersonal Communication Capability 52
4.3 Additional Methods of Interpersonal Communication 53
4.4 Interpersonal Communication Capability Failure 54
4.5 PJM Communication Protocol 55

Section 5: Metering System Requirements 60

5.1 Purpose & Criteria 60
5.2 System Control and Monitoring (Instantaneous data) 64
5.3 Billing (Accumulator data) 76

Attachment A: Data Specification and Collection 81

Attachment B: Schedule of Data Submittals 112

Attachment C: PJMnet ICCP Failover Tests 113

Attachment D: Tie Line Meter Placement and Telemetry 118

Attachment E: Reliability Guidelines to Mitigate the Unplanned Loss of EMS Real Time Assessment (RTA) Capabilities 122

Attachment F: Overview and Requirements for Remote Operations of Market Operations Centers due to Exceptional Circumstances 125

Revision History 129

Table of Exhibits

Exhibit 1: Primary Transducer Accuracy Guidelines 67

Exhibit 2: Generation Scheduling Services 84

Exhibit 3: EMS Services 89

Exhibit 4: Historical EMS Data Services..... 96

Exhibit 5: Transmission Maintenance Planning Services..... 99

Exhibit 6: Transmission Services 103

Exhibit 7: Energy Transaction Services..... 106

Exhibit 8: PJM Administration Services..... 109

Approval

Approval Date: 01/02/2024
Effective Date: 10/31/2024

Ryan Nice, Manager

EMS Support

Current Revision

Revision 49 (10/31/2024):

- Periodic Review
- Section 1.10 Planning Systems, Added reference to Manual 20A Resource Adequacy Analysis.
- Section 3.2.4.1
  - Requirements for Electronic Alternate Data Communication Method.
  - Replaced original text (#2 section of table) of early iterations of alternative non-EMS SCADA communications with latest description and guidance, including diagram.
  - Updates to all rating and monitored equipment language to be consistent for alignment Tariff and M03A.
- Section 4.5.3 Definitions
  - Update "rating" to "Transmission Facility Rating" to be consistent for alignment with Tariff and M03A.
  - Replaced "When the final Step is cancelled" to "When all Capacity Emergency Procedure Steps (1-10) are cancelled" for clarity and precision.
  - Replaced "Load shed" with "Load Shed Directive" for appropriate term use.
- Section 4.5.3, Update "facility rating" to "Transmission Facility Rating" for alignment with Tariff and M03A.
- Attachment A: Data Specification and Collection, Table B: EMS Services, changed definition of #8 for row B.6, which makes state of charge required for Open-Loop Hybrid Resources in addition to existing Energy Storage Resource Model Participant
- Attachment E: Reliability Guidelines to Mitigate the Unplanned Loss of EMS Real Time Asessment (RTA) Capabilities, added text based on recent enhancements to View-Only Mode to cover downstream output links.
- Attachment F: Overview and Requirements for Remote Operations of Market Operations Centers due to Exceptional Circumstances, updated PJM personnel contacts.

Introduction

Welcome to the *PJM Manual for Control Center and Data Exchange Requirements*. In this Introduction, you will find the following information:

- What you can expect from the PJM Manuals in general (see “About PJM Manuals”).
- What you can expect from this PJM Manual (see “About This Manual”).
- How to use this manual (see “Using This Manual”).

About PJM Manuals

The PJM Manuals are the instructions, rules, procedures, and guidelines established by the PJM Interconnection, L.L.C. for the operation, planning, and accounting requirements of the PJM RTO and the PJM Energy Market. The manuals are grouped under the following categories:

- Transmission
- PJM Energy Market
- Generation and transmission interconnection
- Reserve
- Accounting and Billing
- PJM administrative services

For a complete list of all PJM Manuals, go to the Library section on PJM.com.

About This Manual

The *PJM Manual for Control Center and Data Exchange Requirements* is one of a series of manuals within the Transmission Owners manuals. This manual focuses on the requirements for control centers of signatories to the Operating Agreement of PJM Interconnection, L.L.C. The manual describes the telecommunication linkages to the PJM Interconnection, L.L.C. and the recommended characteristics of these control center computer systems and the buildings housing these systems. It also summarizes the computer services and systems at the PJM Interconnection, the standards for billing quality MWh meters, and meter accuracy standards.

PJM staff will review and update this manual on an annual basis and review the updates with PJM control center operators.

The *PJM Manual for Control Center and Data Exchange Requirements* consists of five sections and four attachments. These sections are listed in the table of contents beginning on page 2.

Intended Audience

The intended audiences for the PJM Manual for Control Center and Data Exchange Requirements are:

- Applicants to the Operating Agreement of PJM Interconnection, L.L.C.
- All PJM Members Company Control Rooms
- PJM staff

References

There are some other reference documents that provide both background and detail. The *PJM Manual for Control Center and Data Exchange Requirements* does not replace any of the information in these reference documents. These documents are the primary source for specific requirements and implementation details.

Using This Manual

Because we believe that explaining concepts is just as important as presenting the procedures, we start each section with an overview. Then, we present details and procedures. This philosophy is reflected in the way we organize the material in this manual. The following paragraphs provide an orientation to the manual's structure.

What You Will Find In This Manual

- A table of contents that lists two levels of subheadings within each of the sections
- An approval page that lists the required approvals and a brief outline of the current revision
- Sections containing the specific guidelines, requirements, or procedures including PJM actions and PJM Member actions
- Attachments that include additional supporting documents, forms, or tables in this PJM Manual
- A section at the end detailing all previous revisions of this PJM Manual
- PJM Operations Manager will review this manual on a minimum of an annual basis for updates and changes and review with the PJM Systems Operation Subcommittee.

Section 1: PJM Systems

Welcome to the *PJM Systems* section of the *PJM Manual for Control Center and Data Exchange Requirements*. In this section you will find the following information:

- Descriptions of the PJM control centers systems (see “PJM Systems”).

PJM Systems

PJM operates several functional systems that directly interface with PJM Members. Systems that are wholly internal to PJM and have no direct PJM Member interface are not listed.

The following systems are used to operate the PJM RTO and support the Energy Market:

- Energy Management System (EMS)
- Virtual Backup Control Center (VBUCC)
- PJM SCADA System
- PJM Synchrophasor System
- Data Historian System
- ExSchedule
- Markets Gateway
- Dispatch Management Tool (DMT)
- Operations Planning Tools
- Available Transfer Capability (ATC) Program
- Open Access Same-Time Information System (OASIS)
- Dispatcher Analysis and Reporting Tool (eDART)
- Other eSuite Tools (Power Meter, InSchedules, FTRCenter, DR Hub)
- PJM Voice Communications
- Reliability Coordinator Information System (RCIS)
- Security Constrained Economic Dispatch (SCED)

The following systems are used for planning purposes:

- Generator Availability Data System (eGADS)
- Capacity Reporting Program (Capacity Exchange)
- Central Planning Database
- Transmission Planning Tools

1.1 Energy Management System (EMS)

The PJM EMS performs the real-time monitoring, security analysis, and generation control functions for the entire PJM region. The EMS major subsystems:

Real-Time EMS

- The Real-Time EMS is responsible for monitoring, analysis, and real-time coordination of the PJM region. It includes a full complement of monitoring, generation control, state estimation and security analysis software. PJM Members supply telemetered data to the PJM real-time EMS and may receive data and control signals from the PJM real-time EMS.

Front End Processor (FEP)

- The FEP communicates to remote devises via Distributed Network Protocol (DNP). This allows PJM to communicate directly with individual generators or smaller Control Centers.
- The FEP allows transfer of both generation and revenue data to PJM as well as Automatic Generation Control (AGC), set point, device control, and other functions to the data concentrator (e.g. Remote Terminal Unit, Generator Control System, etc.) at the Member's site.

Dispatcher Training Simulator (DTS)

- DTS is used to train PJM dispatchers. Member company operators participate in Fall Restoration Drills using PJM's DTS.

Development System

- The Development System allows the PJM staff to develop software, database, and displays for the Real-Time EMS, and DTS systems, without interfering with the operation of those systems. There is no direct interaction between PJM Members and the Development System.

Stage System

- The Stage System provides an independent test environment to validate changes developed on the Development System, prior to installing them on the Real-Time EMS. PJM Members may exchange telemetry with the Stage System to verify telemeter points, to test data communications, to test communications failover capabilities and to test application programs.

Quality Assurance System (QAS)

- The QAS is a parallel test system with access to live data used to test and verify software and database changes prior to promoting those changes to the on-line production EMS. There is no direct interaction between PJM Members and the QAS system.

EMS Reliability Configuration

- For reliability purposes, each of the Real-Time EMS systems described above is configured in a redundant or fault tolerant manner (depending on the nature of the subsystem) at each site (Valley Forge and Milford). In addition, the two sites are synchronized and operated from continuously staffed Control Centers at the respective locations.
- The Core elements of the Real-Time EMS systems (ICCP, SCADA, and AGC) are operated in a Dual Primary mode (both sites have these elements of the EMS as primary), with either site having the functionality of continuing to operate the grid by itself in the event of failure of the other.
- The Transmission Network Applications are operated in a Primary/Secondary mode with the configuration updates synchronized to the secondary so that it can either be slaved off of the primary or operate independently and still be ready to take over for the primary in the event of a primary failure or routine switchover.
- In the event of a catastrophic failure of systems at both sites, rapid recovery procedures are in place to recover the systems. While that recovery is occurring, Transmission Operating Authority would be temporarily turned over to the Transmission Owners and the VBUCC System would be used by PJM Dispatchers to provide the Balancing Authority function.

EMS Support Systems

- The functionality as well as reliability requirements of each support system dictate its configuration:
    - Test is site redundant/fault tolerant at each site and has a presence at each site as well as operates in modes (e.g. Dual Primary) like the Real Time EMS in order to support testing of new functionality.
    - QAS is configured for a single system at each site that operates in modes (e.g. Dual Primary) like the Real Time EMS to support testing of (for example) new model functionality.
    - Development as well as DTS are single systems. Development is located at Valley Forge, DTS is located at Milford

1.2 Virtual Backup Control Center (VBUCC)

The PJM VBUCC presently solves a backup Area Control Error (ACE) calculation and in the case of a dual AC1 and AC2 failure would mitigate the effects. It includes provision for all core SCADA and EMS applications, including for example AGC, SE and DMT, and interoperates with Markets through SCED. It is connected to other PJM EMS systems but has dedicated independent infrastructure and networking and has its own separate ICCP and DNP data links with member companies. The VBUCC is intended to be able to fully control the grid in the event of an AC1 and AC2 failure, pending further testing and development.

1.3 Synchrophasor System

A dedicated, secure Wide Area Network is streaming system data from member synchrophasors to PJM data centers, and between PJM and other RTOs and ISOs. The data is used in support of voltage stability, oscillation monitoring and detection, situational awareness, the archival system, model analysis, and as a Wide Area View, etc. It provides for the exchange of information among those who need synchrophasor and operating reliability data in support of their reliability responsibilities.

1.4 Data Historian System

The Data Historian System serves as a data archive for operational data in near-real-time. It provides visualization tools for presenting data to operators and provides a permanent archive of data for post-event study and analysis. Telemeter data is archived from EMS and other operational data is imported from other sources, including Market Systems.

1.5 ExSchedule

The ExSchedule records customer requests for interchange transactions, the bulk power scheduled between PJM and neighboring regions. PJM personnel use ExSchedule to process and schedule these transactions. ExSchedule validates PJM ramp, use of transmission reservation rights, and other PJM scheduling business rules as described in Manual 10: Pre-Scheduling Operations.

1.6 Markets Gateway

PJM Markets Gateway is the system that PJM Market Participants use to participate in the Day-Ahead Energy Market, Real-Time Energy Market, Synchronized Reserve Market and Regulation Market. Market Participants can use PJM Markets Gateway to:

- Prepare and submit generation offers
- Prepare and submit regulation offers
- Prepare and submit synchronized reserve offers
- Prepare and submit demand bids
- Prepare and submit increment offers and decrement bids
- Prepare and submit load response bids
- Enter bilateral regulation transactions
- Enter bilateral synchronized reserve transactions
- Enter resources adjustable parameters and status intra-day for the Real-Time Energy Market

- Review public and private Day-Ahead Energy Market results
- Review public and private Ancillary Services Market results

For more information on PJM Market Operations and business rules, please refer to Manual 11: Energy & Ancillary Services Market Operations.

1.7 Dispatch Management Tool (DMT)

The Dispatch Management Tool (DMT) is a software tool that is designed to enable the PJM dispatchers to manage generating unit and transmission constraint information and administer the Real-Time Regulation Market. Since many of the current dispatcher logging activities are position independent, the DMT allows each dispatcher position to view the same generation and transmission constraint information simultaneously. This real-time sharing of logging information provides the PJM dispatchers with an efficient communication vehicle to help them perform their job functions more effectively.

The DMT is used by the PJM dispatchers to:

- View and record real-time unit generation information
- View and record unit generation scheduling information
- Review the chronological log of generation events
- Analyze system resources
- Record and calculate regulation assignment information
- Record and calculate Synchronized Reserve assignment information
- View and record real-time transmission constraint information

1.8 Open Access Same-time Information System (OASIS)

The PJM OASIS system maintains transmission and ancillary services information for PJM Members. OASIS operates on a collection of PJM and PJM Member computers linked by private and public networks. For additional information, see the ***OASIS User Guide.***

1.9 Other PJM Tools (Power Meter, InSchedule, DR Hub, FTR Center)

The other PJM tools are all Web-based tools that PJM members use to facilitate the exchange of information with PJM and support various PJM market activities.

Curtailment Service Providers will retrieve PJM real time Energy market dispatch instructions, PJM emergency event notifications, PJM emergency test event notifications, and PJM synchronized reserve event notifications on a 1 minute basis from PJM DR Hub system through published Web Service standards in DR Hub web service User Guide. PJM will post dispatch instructions in DR Hub based on economic demand response registration or economic demand

response dispatch group that has been dispatched in the real time energy market. PJM will post in DR Hub emergency event notifications and instructions when it calls an emergency demand response event. PJM will post in DR Hub synchronized reserve event notifications when it calls a synchronized reserve event.

CSP must maintain communication link and continuously check for dispatch instructions and event notifications and provide PJM an acknowledgment for receipt of each dispatch instruction and notification. PJM can provide generic and unsupported software client to perform the required requests and acknowledgements. This is offered as an aid for CSPs that currently do not have web service capabilities.

1.10 Planning Systems

PJM operates several planning systems which are used to run studies for reliability and capacity planning and for transmission planning. Reliability and capacity planning includes the Generating Availability Data System (GADS) database and Capacity Exchange are computer programs and databases used for entering, storing, and reporting generating unit data concerning outages, unit performance, and fuel performance. In addition, PJM Members provide information to the PJM Central Planning Database, a database containing planning information relating to generation production costs, load flow analyses, short circuit and system dynamics studies, and LSE load data. Additional details about these planning functions may be found in Manual 19: Load Forecasting and Analysis, Manual 20: PJM Resource Adequacy Analysis, and Manual 20A: Resource Adequacy Analysis.

PJM also performs transmission planning studies. For example, PJM Members provide transmission planning capacity and load data to the PJM Transmission Planning Tool which generates performance adequacy and reliability assessments (see Manual 02: Transmission Service Requests).

Section 2: Member Control Center Requirements

Welcome to the *Control Center Requirements* section of the PJM Manual for *Control Center Requirements*. In this section you will find the following information:

- A description of the different categories of control centers (see “PJM Control Center Categories”).
- An overview of PJM Member responsibilities (see “PJM Member Data Exchange”).
- Computer system requirements for Control Centers (see “Computer System Requirements”).
- Communications requirements (see “Communications Requirements”)
- Requirements for control center physical facilities (see “Facilities Requirements”).
- Control center staffing recommendations (see “Control Center Staffing”).

2.1 PJM Control Center Categories

PJM Members may be involved with transmission ownership, generation ownership, load service operations, and/or PJM Energy Market participation. Depending upon the functions they perform and the services they require from PJM, the control center for each PJM Member will fall into one or more of the designations defined below. The specific functions, systems, and communications capabilities of that control center depend upon the responsibilities of the PJM Member:

- Transmission Owner Control Center — An entity that participates in the Operating Agreement of PJM Interconnection, L.L.C. (Agreement) and assists PJM in operating and controlling Designated Transmission Facilities establishes a Transmission Owner (TO) Control Center to facilitate its responsibilities regarding the security of the PJM RTO.
- Market Operations Center — An entity that participates in the Agreement and assists PJM in operating and controlling generation within the PJM RTO establishes a Market Operations Center (MOC) to facilitate its responsibilities regarding the security of the PJM RTO.
- Load Service Center — An entity that participates in the Agreement and operates and controls load (but without generation or Designated Transmission Facilities) establishes a Load Service Center (LSC) to facilitate its responsibilities for its load in the PJM RTO. Entities responsible for load that also assist PJM in operating or controlling transmission and/or generation may not need an LSC, as they can discharge these responsibilities from a TO or MOC.
- Marketing Center — An entity that participates in the Agreement as a Power Marketer, Wholesale System User, Other Supplier, or Transmission Customer establishes a Marketing Center to facilitate communications with PJM concerning its participation in the PJM Energy Market.

Many PJM Members are involved in more than one of the four areas of responsibility discussed above. Each member is obligated to be in compliance with the Code of Conduct requirements established in FERC Order 2004. Entities participating in the PJM Energy Market may establish a separate MOC. All of these four categories of control centers are referred to collectively in this manual as “control centers”.

2.2 PJM Member Data Exchange

PJM Members support a variety of PJM functions appropriate to their business requirements and level of participation requirement in PJM. For each of the PJM services described in this section, data is exchanged between PJM and one or more of the categories of PJM Member control centers. The following PJM services are further defined in Attachment A, Information Services Matrix.

- Generation Scheduling Services — MOCs input generation, pre-scheduling, scheduling, Synchronized Reserve bids, and regulation bids, and outage data to PJM, and PJM output hourly and daily generation scheduling information to TOs, MOCs, and LSCs (see Manual 10: Pre-Scheduling Operations and Manual 11: Energy & Ancillary Services Market Operations).
- EMS Services — TOs, MOCs and LSCs input real-time transmission and generation information plus generator regulation and availability data and PJM outputs real-time transmission status, generation status, generation dispatch and regulation signals, and operations & emergency information (see Manual 12: Balancing Operations).
- Synchrophasor Services – TOs and MOCs input real-time transmission and generation information (see Manual 14D: Generator Operational Requirements).
- Transmission Maintenance Planning Services — TOs input transmission maintenance schedules which are confirmed by PJM to all PJM Members (see Manual 03: Transmission Operations).
- Transmission Services — OASIS is used at LSCs and Marketing Centers to input transmission reservations and by PJM to output Available Transmission Capacity, energy transactions, transmission congestion information, approved transmission reservation requests, and other market information to all categories of control centers (see Manual 02: Transmission Service Requests and the OASIS User Guide.
- Energy Transaction Services — bilateral energy transactions are input from all categories of control centers and are confirmed by PJM (see Manual 11: Energy & Ancillary Services Market Operations and Manual 12: Balancing Operations).
- Long-term Planning Services — TOs, MOCs, and LSCs input capacity, load, system characteristics information, generator events, production costs, outage reports and long-term planning information and PJM outputs the results of studies and assessments to all categories of control centers (see the PJM Regional Transmission Planning Process Manuals (14 Series))

- PJM Administration Services — PJM outputs general administrative information and FERC filings to all PJM Members via the PJM Web site.

2.3 Computer System Requirements

Each PJM Member's control center serves as the primary operating link to the PJM control centers and includes computer system hardware and software that supports their responsibilities under the Agreement.

2.3.1 Transmission Monitoring Capability

Transmission Owners (TOs) shall provide transmission monitoring at their Control Centers including monitoring of circuit loading, voltages, limit violations and contingency analysis. Basic software should include Real-time Assessment (i.e. State Estimation and Security Analysis functions to monitor actual and contingency conditions. This should include functionality to bring any important deviations in operating conditions to the attention of operating personnel.

PJM shall conduct a Real-time Assessment at least once every 30 minutes. In the event that PJM's monitoring systems are unavailable, or PJM experiences a failure of its Real-time Assessment capability for longer than 15 minutes, PJM may notify TOs that they are the sole monitor for their portions of the bulk power transmission system (NERC Standard TOP-001 R13). In that scenario, PJM will communicate the situation via the All-Call system. TOs shall use their monitoring systems to:

1. conduct a Real-time Assessment at least once every 20 minutes (assess the reliability of their portions of the bulk power transmission system through a combination of state estimation and contingency analysis and SCADA) until PJM informs the TOs that PJM's Real-time Assessment capability is restored;
2. communicate any contingency or limit violations on any bulk electric system facility to PJM as soon as possible.

If the TO determines that corrective actions are necessary to preserve system reliability, then PJM shall approve the corrective action, unless immediate action is necessary. If immediate action is necessary, the TO shall implement the action and report to PJM any actions taken as soon as possible. If the various PJM real-time analysis tools are not functioning for the present operating state (possibly because of an EMS outage), PJM shall coordinate with the appropriate TOs to determine if their tools are functioning. If neither the TO's nor the PJM's EMS is functioning, then PJM will work with the TO(s) to return the system to a known operating condition.

Note:
PJM Transmission Owners that own BES facilities and serve load greater than 300 MW must have a real-time analysis package or have their BES facilities be observable within another TO analysis package. Any exceptions to this requirement must be formally approved by PJM.

PJM relies on Transmission Owners to serve as a back-up to PJM, monitoring BES facilities, when the PJM EMS is inoperable. PJM Transmission Owners shall notify PJM dispatch within 15 minutes when their TO analysis packages are unavailable. In general, PJM may be in an unknown state when both PJM and TO analysis packages are unavailable.

The continuous calculation and monitoring of post-contingency voltages for nuclear power plants (for the loss of the nuclear unit) is an important requirement to ensure that adequate voltage is always available for the operation of the nuclear safety systems. Given this requirement, the nuclear power plant(s) shall be notified in cases where the transmission monitoring capability (at PJM and the Transmission Owner) becomes unavailable and the ability to calculate the post-contingency voltages is lost. There may be situations where the calculations are only being performed at PJM. In this case, loss of the PJM capability shall trigger the notification to the nuclear power plant(s) within 30 minutes. The notification will go via the All-Call from PJM to the Transmission Owner(s) who will then communicate with the applicable nuclear power plant(s).

System Availability

The computer hardware and software at each control center shall achieve a long-term 99.95% availability level for those reliability functions directly affecting the successful operation of PJM. Any application that supplies operational data to PJM, accepts generation control signals from PJM, or otherwise links to the real-time operational aspects of the PJM control system is considered vital to reliability. Other applications may be considered to be vital to a PJM Member's operations and therefore, shall also achieve 99.95% availability. Redundant hardware configurations with automatic failover schemes are generally necessary to achieve 99.95% availability.

PJM Member Transmission Owners shall [TOP-010-1(i) R1 and R4]:

1. Implement an Operating Process or Operating Procedure[1] to address the quality of Real-time data necessary to perform Real-time monitoring and Real-time assessments, as appropriate. The Operating Procedure or Operating Process shall include actions to address Real-time data quality issues when data quality affects Real-time monitoring or Real-time Assessments, as appropriate.

[1] Operating Process, Operating Procedure and Real time Assessments are defined in the Glossary of Terms used in NERC Reliability Standards

2. Utilize their data quality indicators to indicate the quality of Real-time data to their System Operators,
3. Have an alarm process monitor that provides notification(s) to their System Operators when a failure of their Real-time monitoring alarm processor has occurred.

Note:
In addition to the requirements above, it is recommended that PJM and PJM Member Transmission Owners follow the reliability guidelines listed in Attachment E of this manual to minimize the impacts and duration of the loss of Real Time Assessment capabilities.

2.3.2 Data Backup & Archiving

All PJM Members shall prepare and implement a backup and archiving plan which minimizes the loss of vital data upon the occurrence of any hardware failure or a catastrophic system loss.

2.3.3 Computer System Security

Control centers with electronic data links to the PJM computer systems require rigorous computer system security provisions to prevent unauthorized access and unintentional operation. Due to the sensitive nature of both operational and financial data, control center computer systems shall include appropriate techniques such as password log-on for internal users, hardware and software security controls for external users, and on-line virus detection capabilities. Telecommunication circuits connected to any control center computer system shall utilize firewall technology to prevent unauthorized access from external sources.

2.3.4 System Maintenance

Due to the operational requirements and economic benefits of a PJM Member's control center computer system, a computer system (hardware, software, and network) maintenance service arrangement with 24-hour, 7 day/week call-out provisions or on-site staff, is required to ensure appropriate levels of system availability to implement database changes, and to modify user interface displays.

2.3.5 Expansion Capability

PJM Member computer system hardware, software, and network shall be expandable to accommodate growth in their system and operations and to accommodate future changes to the organization and responsibilities of the PJM RTO and the PJM Energy Market. PJM services and marketing activities are all expected to increase and the control center computer systems shall be expandable to accommodate this expected growth. System design shall provide for orderly addition of computer hardware, software, and network through adherence to accepted system standards and Good Utility Practice.

2.3.6 Data Integrity

PJM maps quality codes sent by member companies into four EMS quality codes:

1. Good (valid data)
2. Manually Substituted by company
3. Telemetry Failure
4. Suspect (usually indicating value is bad)

Member companies should only send valid quality codes. In particular, companies with front-end data servers should ensure that the front-end server does not initiate data transfers with PJM until the front-end server has begun receiving valid and current data from the company EMS or other data source. Sending even a single scan with zero values or other bad data for analog or switch statuses can cause massive alarm generation and improper operation of State Estimator and other vital functions.

PJM provides new members and existing members the testing requirements for system commissioning and on-going support. The required tests include:

For new members:

1. Server to server communication verification over PJMnet.
2. Exchange of NERC ICCP Association Information Exchange Form.
3. Exchange of client and server data points needed before ICCP Association testing.
4. Ability to initiate an ICCP Association with PJM.
5. Ability to support an ICCP Dual direction Client-Server Association.
6. Ability to provide real-time SCADA data during testing along with the ability to change values and quality codes.
7. Ability to participate in testing with the designated PJM test or stage system.
8. Participation in Failover testing to verify required network, server, and communication redundancy (see Attachment C of this manual for PJMnet Failover Tests).

For existing members:

1. All of the above (1 to 8) new members testing requirements.
2. The ability to test with the designated PJM test or stage system while supporting the real time PJM EMS system.
3. The ability to test changes with the PJM designated test or stage system before putting the changes in production with the real time PJM EMS system.
4. The ability to support Failover testing to verify required network, server, and communications redundancy for existing member changes while still supporting the real time PJM EMS system.

5. PJM Member companies are required to successfully complete the **PJMnet ICCP Communications Failover Test** before going into production with the PJM real time EMS system (see Attachment C of this manual for PJMnet Failover Tests). The purpose of this test is to verify redundancy from company ICCP servers to PJM ICCP servers. In the process of doing this ICCP server to server Failover testing all network hardware components such as: routers, firewalls, and PJMnet communication lines will have their redundancy validated.
6. In order to accomplish site to site failover between AC1, AC2, and VBUCC, depending on situation, member company ICCP systems must be able to support up to four IP addresses in their ICCP association start up sequential server hunt list.

2.4 Communications Requirements

Telecommunications (voice and data) circuits, which must be reliable and secure, shall be tested regularly and/or monitored on-line, with special attention given to emergency channels. These communications will include:

- Provisions to monitor communications 24 x7.
- Voice communications between Transmission Owners and Distribution Providers in the Transmission Owner area.
- Voice communications between Transmission Owners and Generator Operators in the Transmission Owner area.
- Voice communications between Transmission Owners and neighboring Transmission Owners both internal to and external to PJM.
- Data communications between Transmission Owners and neighboring Transmission Owners both internal to and external to PJM (either directly or through PJMnet).
- Use of predetermined communication paths (phone numbers, etc.) to talk to neighboring Transmission Owners internal and external to PJM.
- Testing of voice communications with all neighboring Transmission Owners both internal and external to PJM.

2.5 Facilities Requirements

This section discusses the control center facility considerations for a PJM Member, including the physical space housing operations staff and, if appropriate, a computer room, communications room, and power supply area. While these considerations apply to all PJM Member categories, the specific implementation of control center facilities considerations shall be appropriate for the nature of the computer systems and communications equipment installed.

2.5.1 Environmental Characteristics

In order to ensure the PJM Member's computer system availability and data reliability discussed in the previous section, its control center facilities shall provide an environment that is suitable for its equipment and personnel during the hottest and coldest outdoor temperatures that can be anticipated.

- The range of control center temperature and humidity shall be controlled appropriately for the installed computer systems and communications equipment. The most restrictive temperature and humidity characteristics of any item of equipment in each room of the control center, the total heat load of that equipment, and the projected growth shall establish the design criteria for the heating, ventilating, and air conditioning systems provided.
- Control room operators, technical staff, and maintenance personnel should be able to function comfortably.
- Where feasible, heating, and air conditioning equipment shall be backed up with redundant or auxiliary systems to allow operations to continue indefinitely following the failure of any single temperature controlling device or motor control center.
- If the control center is located in the proximity of a polluting atmosphere, a positive pressure shall be maintained in the computer room using filtered air to minimize the accumulation of airborne contaminants on the computer system circuit boards and components.

2.5.2 Power Supply & Conditioning

Because of the importance of non-stop operation of the PJM RTO and the sensitivity of computer equipment to minor power disturbances, a stable and secure supply of AC power for the equipment in the control room, computer room, and communications room shall be provided and installed in compliance with current National Electric Code provisions.

- An uninterruptible power supply (UPS) (i.e., battery charger, battery, and inverter) and a backup generator is necessary to supply power to operator display equipment, computer systems and communications equipment. A completely redundant power supply with dual UPS may also be utilized.
- K-rated transformers and oversized neutral conductors shall be employed as necessary to mitigate the effects of harmonic distortion created by non-linear loads.
- The UPS battery shall have sufficient capacity to operate the computer system and communications equipment until stable emergency generation can be achieved. Periodic maintenance and testing of the battery cells and inter-cell connections shall be performed.
- The backup generator shall be tested periodically under load to ensure its availability under loss of power conditions. Fuel supply for the backup generator should be sufficient for a five-day period. If applicable, redundant backup generators should be considered.
- An emergency lighting system should be provided with adequate battery capacity for several hours.

- The heating, cooling, and ventilation equipment shall also be powered by the backup generator (but not by the UPS).
- A high quality, common earth ground shall be provided, in accordance with IEEE standards, for the computer system and communications equipment to provide a low impedance path for rapid clearing of electrical faults and to reduce electromagnetic interference.
- If UPS power is not provided, TVSS protection for power and communications circuits shall be provided to mitigate the effects of lightning strikes and AC power excursions.
- Where warranted, external power to the control center shall be supplied from two sources, such as two distribution feeders that follow diverse routing from separate electric substations.

2.5.3 Area Access Security

Access to PJM Member control rooms should be restricted. For example, access could be controlled by means of a single entry point monitored by office personnel during business hours and, at other times, either by control room personnel via closed-circuit TV monitors and remotely controlled locks or by a cipher/key/badge-reader lock. Emergency exits/entrances should be sealed and alarmed in conformance with local fire regulations.

2.5.4 Information Flow to Control Room Personnel

A protocol shall be established concerning information transfer from PJM Member staff to the appropriate staff members and their supervisor responsible for coordinating and directing work in the PJM Member's control center. Topics covered shall include the following:

- Inquiries to the shift team and their on-shift supervision.
- Access control to the control room.
- Approvals for Computer outages.
- The PJM shift supervisor and Support Center shall be notified of any computer system outages.
- In case of implementation of PJM Emergency Procedures, all non-essential personnel shall leave the control center and non-essential computer system hardware and software maintenance should be terminated.

2.5.5 Smoke & Fire Protection

Smoke and fire detection equipment shall be installed to detect smoke and fire, warn personnel to hand-extinguish the fire or evacuate the facility, and, where warranted, automatically extinguish the fire. Smoke and fire protection equipment shall conform to the current version of NEC, local, state, and national codes.

2.5.6 Recovery Procedures

In accordance with NERC Standard BAL-005-02b: Automatic Generation Control, PJM, as the Balancing Authority, provides adequate and reliable backup power supplies and performs weekly tests (system conditions permitting) at both control center locations to ensure continuous operation of AGC and vital data recording equipment during loss of the normal power supply.

The AGC program is monitored by a function called the “Multi-Computer System (MCS) function.” This function monitors all vital EMS programs, including AGC, and initiates a failover to the backup server if a problem is detected with the application. Data links to each member company are also monitored such that any interruption in data feed is indicated via alarm messages and an indicator on the main menu and by individual quality codes on all data affected by the link outage. In addition, the generation dispatcher has graphic presentations of ACE and other AGC data in front of them at all times so any interruption in the program or its calculations are readily apparent as a flat-line on the graphs.

PJM Members shall comply with PJM recovery procedures. For PJM Members that interface with the PJM EMS, all the necessary backup voice and data circuits must be provided between the Control Center and PJM. Generation owners should design their generation control systems with the capability to accept alternate control inputs from PJM AGC systems (i.e. AC1, AC2, and VBUCC) including manual operation as directed by PJM operations personnel.

Each PJM Member TO must have a plan for loss of control center functionality and maintain copies at both the primary control center and the location providing back functionality. PJM Member TO’s plan is to include requirements as they relate to NERC Standard EOP-008 and are outlined in the TO/TOP Matrix. When a PJM Member TO has experienced a loss of its primary or backup functionality, or anticipates that the loss of primary or backup functionality will last for more than six calendar months, the PJM Member TO shall provide a plan showing how it will re-establish primary or backup functionality to PJM so that PJM can meet its reporting requirements. PJM Member TO’s recovery plan shall include procedures and responsibilities for providing annual training to ensure that operating personnel are able to implement the plan. The results of the tests shall be documented by demonstrating backup functionality for a minimum of two continuous hours, and accounting for the transition time between the simulated loss of a primary control center functionality and the time to fully implement the backup functionality (EOP-008 R7).

All PJM Members shall develop a backup recovery plan to cover various contingencies, including maintaining an off-site storage location for updated copies of all software and data files necessary to restore control center functions. The backup recovery plan is subject to review by PJM.

PJM systems provide multiple levels of redundancy in order to mitigate various levels of Control Center functionality degradation. This redundancy and the associated Business Continuity Plans developed by PJM ensure that PJM can meet its responsibilities under the PJM Operating Agreements as well as NERC standards. The following descriptive material provides a high

level view of key areas included in the Business Continuity Plan and in detailed PJM operating procedures.

Portions of the PJM Control Center capability are housed in diverse physical locations. The PJM campus in Valley Forge, PA houses one control center and a second control center is located in Milford Township, PA. Each control center has access to the both AC1 and AC2 EMS and maintains redundant communications capability for data and voice.

Generation Control: PJM is capable of calculating Area Control Error (ACE) via AC1, AC2 or VBUCC. AC1 and AC2 are physically located at different sites to increase redundancy. The PJM Operator has the ability within each tool to select alternative tie sources to correct for poor data quality.

PJM Actions

- PJM Dispatcher verifies accuracy of ACE calculation.
- PJM Dispatcher controls to appropriate ACE by manually correcting any inaccurate data inputs.
- PJM Dispatcher notifies support personnel of data quality issue.
- PJM Dispatcher switches to alternative system in the event of a widespread data quality issue.
- PJM returns to normal operations when data/ACE calculation issues are resolved.

Transmission Analysis: PJM is capable of performing transmission analysis via either Primary EMS site. System Operators have the ability to switch between EMS's in real time. Testing is scheduled on a weekly basis. Transmission Owners are responsible to monitor/control their transmission system in the event that both PJM primary EMS's are unavailable.

PJM Actions

- PJM Dispatcher verifies the accuracy of the Network Applications (NA) results.
- PJM Dispatcher attempts to resolve inaccurate NA results by troubleshooting data inputs and manually over riding incorrect device statuses, tuning parameters, etc.
- PJM Dispatcher notifies support personnel of issue.
- If appropriate, PJM Dispatcher switches to alternate EMS.
- PJM Dispatcher notifies companies via the All–Call of NA status.
- PJM Dispatch notifies Transmission Owners and external systems via RCIS if unable to monitor system via alternate EMS.
- PJM returns to normal operations when appropriate.

Data Integrity: PJM is capable of failing ICCP links from AC1 to AC2 communication servers. System Operators have the ability to switch servers in real time. Testing is scheduled on a weekly basis.

PJM Actions

- PJM Dispatcher verifies the accuracy/status of the data links.
- PJM Dispatcher notifies support personnel of data quality issue.
- PJM Dispatcher, if appropriate, will switch servers in real time on the PJM EMS.
- PJM Dispatcher, if appropriate, will switch EMS's if communication problems exist on both primary and stand by communication servers on either EMS.

Voice communication: Voice communications are available from either control room. Within each site there are multiple levels of redundancy, including dedicated ring-downs, manual dial, business voice systems, cellular, satellite, all-call and facsimile communications. Testing is conducted on a periodic basis.

PJM Actions

- PJM Dispatcher will utilize the appropriate phone system, based on availability, following this hierarchy: British Telecom (BT), Tradenet, office phone, cell, satellite.

These plans and procedures for maintaining PJM Control Center functionality are integrated into the PJM Business Continuity Plan. Periodic training on the plan elements and specific actions required by System Operators is included in PJM's normal operating training curriculum. The Business Continuity Plan is tested on a semi-annual basis via drills and procedural exercises. System Operators are responsible for conducting the periodic tests, participating in the Business Continuity Exercise and participating in debriefing activities designed to identify and implement improvements to the overall process. Detailed operating procedures are documented in the Business Continuity Plan.

2.5.7 Disclosure of EMS Data to Transmission Owners

PJM will implement a technical solution to provide Transmission Owners with read-only access to PJM's EMS system. In order to ensure that this solution is implemented in a secure, protected manner, members are required to implement the following:

- Procedural controls to ensure that this information is viewed only from a location within the member's control center.
- Provide PJM's Network Infrastructure department configuration information needed for establishing and authenticating connections.
- Limit access to the workstation utilized in viewing PJM's EMS screen to those with authorized access to the member's control center.
- Share credentials for this access only with individuals who have authorized access to the member's control center. This should be documented in accordance with the member's controls for CIP 004 R4.
- Report to PJM immediately any incidents leading to loss, theft or destruction of the authentication devices.

- Data Security: Protect the information displayed in accordance with PJM's Operating Agreement, Section 18.17, as well as member's own policies, standards and procedures.
- PJM may request evidence for any or all of these steps during PJM's TO Audit.

2.6 Control Center Staffing

PJM Member control centers must be staffed with competent personnel trained (see Manual 40: Training and Certification Requirements) for all normal and emergency situations that might be anticipated. Control room operator staffing levels should be prudently determined based upon the impact of the PJM Member's operations. Possibilities for control room staffing include combinations of the following:

- One or more operators in the control room 24 hours a day, 7 days a week
- One or more operators in the control room during business hours or hours of operation
- Responsible personnel not in the control room but able to be contacted by the PJM dispatcher within one minute

While staffing guidelines cannot cover all situations, the following general guidelines may be useful:

- Transmission Owners, Generation Owners, and other Load Serving Entities that participate in the operation and security of the PJM RTO and/or that must respond to generation adjustment or load shedding during normal or emergency conditions must staff their control center 24 hours a day, 7 days a week, with 100% availability of staff.
- Owners of generation which operates infrequently may require continuous control center staffing only during the hours of their units' operation. They must be able to answer telephone questions and directions within one minute of a call initiation by PJM.
- Market Participants must be able to respond to telephone questions about their scheduled transactions within one minute of a call initiation by PJM.

2.6.1 Staffing Upon Loss of an EMS or a 765 kV, 500 kV, or 345 kV RTU

If a PJM Member's EMS becomes unavailable, some PJM Members move their dispatchers to a backup control center while others send staff to man their vital operational facilities. PJM Members should continue to stay in contact with and provide as much information as possible to PJM. If an EHV substation RTU becomes unavailable, the respective Transmission Owner may be required to send staff to that substation to telephone information to the Transmission Owner and to PJM.

2.7 PJM Member Back Up Capability Required to Support PJM in its TOP Role

It is recommended that PJM and PJM Member Transmission Owners follow the reliability guidelines listed in Attachment E of this manual to minimize the impacts and duration of the loss of Real Time Assessment capabilities. However, if a PJM Member primary EMS capability becomes unavailable, PJM will need back up capability (may include backup EMS or backup functionality or staffing critical substations, etc.) from the PJM Member Transmission Owner to be available (within 2 hours per EOP-008 R1.5) so that PJM can continue to perform its functions as the TOP during such interruptions. Specifically, PJM requires the following from the PJM Members during the loss of the transmission owner EMS:

- NERC Standard TOP-003 R1, R3 and R5 require data to be provided to PJM to ensure PJM can fulfill its operational and operational planning responsibilities. If such data is interrupted by unavailability of the PJM Member EMS, then the PJM Member is required to have a backup capability to ensure that the necessary data continues to be provided to PJM.
- NERC Standard TOP-001 R1 requires the TOP to act to maintain the reliability of its Transmission Operator Area via its own actions or by issuing Operating Instructions. If the PJM Member is unable to execute Operating Instructions issues by PJM, such as, switching or load shedding, due to the unavailability of its EMS or other operational tools, then the PJM Member is required to have a backup capability to be able to execute these actions.
- NERC Standard TOP-001 R12 and R14 require the TOP to operate within the limits of its IROLs, and to initiate its Operating Plan to mitigate SOL exceedances identified as a part of the TOP's Real-time monitoring or Real-time Assessment.
    - If the data for monitoring the IROLs and SOLs passes through the PJM member EMS and that capability is lost, then the PJM Member is required to have a backup capability to ensure that the necessary data continues to be provided to PJM.
    - PJM may need to take immediate action to mitigate potential and actual IROL or SOL exceedances that may become violations, which often requires the PJM Member to execute actions requested by PJM. In accordance with TOP-001 R1 stated above, if the unavailability of the PJM Member EMS or other tools prevents the execution of those actions, then the PJM Member is required to have back up capability to ensure that it can execute actions requested by PJM.
- In the event that a TO is transitioning to its back up facility, PJM will continue to monitor the TO Transmission System during the transition state to the extent data quality permits per NERC Standard EOP-008-1 R1.6.2.

2.8 Control Center, EMS or Networking Changes Communication

Some Control Center changes and activities trigger special requirements to notify and communicate to PJM. Any changes that will or potentially could affect the availability or accuracy of telemetry or data provided to PJM for EMS related activities have special notification and communication requirements. See Section 3.8 of this manual for details about the requirements and procedures.

Section 3: Data Exchange Requirements

Welcome to the *Data Exchange Requirements* section of the PJM Manual for *Control Center and Data Exchange Requirements*. In this section, you will find the following information:

- Data exchanges with new PJM Members (see “Introduction”).
- Data exchanged between PJM and PJM Member’s EMS systems (see “Energy Management System (EMS) Data Exchange”).
- Data exchanged between PJM and PJM Member’s Synchrophasor systems.
- Information available to Market Participants (see “OASIS Information Exchange”).
- Data exchanged over telephone and facsimile machines (see “Dispatch Voice and Facsimile Communications”).
- Usage of backup communications systems (see “Alternative Voice Communications”).
- Requirement to support both PJM dispatch centers (see “EMS Backup Communications”).

3.1 Introduction

Communications between PJM Members and PJM depend upon a combination of electronic data, dispatch and business voice links, facsimile, Internet communications (e.g., to OASIS), and data storage and paper reports sent by courier or US mail.

- PJM Members (and PJM) may require additional time after signing the Operating Agreement to establish electronic data links.
- PJM Members with real-time data to be exchanged with PJM and with a significant participation in the supply of information to the PJM RTO require electronic communications via the EMS and eSuite data exchanges.
- New PJM Members with a small amount of data to be exchanged and that do not require real-time links to PJM should use facsimile and voice communications for their PJM communications.
- New PJM Members already communicating with PJM through another PJM Member’s electronic communications systems should arrange to continue using those communications systems where this is feasible; separate electronic communications links can be planned and installed subsequently if necessary.

3.2 Energy Management System (EMS) Data Exchange

Energy Management System (EMS) information is exchanged between PJM EMS and the EMS of PJM Members primarily to support real-time functions such as PJM RTO network monitoring, generation control, and security analysis as well as non-real time functions, such as generation

scheduling, accounting information, messages, and reports. The information exchange occurs periodically, by exception, and upon demand.

3.2.1 EMS Communications System

PJM and PJM Members exchange EMS information between their respective EMS computer systems via PJMnet or via the Internet using Jetstream.

3.2.1.1 PJMnet Communications System

PJMnet is a dual-redundant MPLS network that PJM utilizes as the primary wide-area network for communicating Control Center data to and from PJM. PJMnet will support:

- Inter-Control Center Communications Protocol (ICCP) data links to Control Centers
- SCADA links to plants via remote terminal units (RTUs) using Distributed Network Protocol (DNP3)

PJMnet connects PJM Member control centers and generating plants to PJM's dual redundant Control Centers. The number of physical interfaces and their capacity will be determined by the impact of the PJM Member's facilities on overall PJM Operations. PJM Members are expected to install metering and use their own EMS/GMS/SCADA or equivalent system to collect data. PJM will provide PJMnet network connections and router(s) at the member company location.

All Transmission Owner Control Centers used for PJM controlled transmission facilities will receive a redundant PJMnet connection with optional additional circuit(s) to their disaster recovery location(s).

Availability and qualification for other links is described in Exhibit 3 of Manual 14D: Generator Operational Requirements.

Exhibit 4 in Manual 14D: Generator Operational Requirements shows the types of equipment necessary for exchanging generation data with PJM.

PJM will supply a PJMnet connection to Transmission Owners, and to generation sites per customer eligibility as indicated in Manual 14D: Generator Operational Requirements. This will include installation of the MPLS connections (local loop, etc.) and routers as well as ongoing Network Operations Support and maintenance of the PJMnet components. If dual circuits are provided, PJM will route them as diverse from each other as practicable within the existing infrastructure. Installation will be completed within 90 calendar days of the completion of the site survey contingent upon timely completion of the PJM Member supplied items. The PJM Member will be responsible for the following:

- AC power within five (5) feet of equipment site.
- Power outlet(s) will be quad box outlet on a separate breaker for each router.
- Adequate cooling.
- Mounting location for PJMnet router and modem equipment.

- An environment clean and free from excessive dust or debris, dry (5 to 95% humidity, non-condensing), of moderate temperature (32 to 104 degrees F), well-ventilated and well-illuminated.
- Adequate station ground.
- Dial up modem lines for out of band router access by NOC.
- Attend Scheduled kickoff conference call to discuss PJMnet site-specific IP addressing, protocols to be used and timeline requirements. During this call, details should be agreed to, before proceeding with the installation.

By utilizing the PJMnet Communications system, PJM Member agrees to abide by all terms and conditions contained in the User Agreements governing such utilization, as updated from time to time located at the following links:

- For Qualified Connection provided pursuant to Schedule 9 of the Open Access Transmission Tariff (No fee assessed)
- For Purchased Connection provided pursuant to Schedule 11 of the Open Access Transmission Tariff (Fee assessed)

Per CIP-012, responsible entities are required to document a plan(s) to mitigate the risks posed by unauthorized disclosure and unauthorized modification of Real-time Assessment and Real-time Monitoring data in transit between applicable Control Centers. As part of this plan, entities are required to identify what, and where, security protections are applied to mitigate the risks posed by unauthorized disclosure or modification of Real-Time Assessment and Real-time monitoring data.

For PJMNet users, PJM owns and operationally manages the communication links and endpoint equipment (routers) between PJM and PJM Member companies, otherwise known as “PJMNet”. In this scenario, PJM is responsible for protecting all Real-time Assessment and Real-time monitoring data, through PJMNet, while in transit between PJM Control Centers and the PJMowned routers physically located at PJM Member control centers. PJM accomplishes this by ensuring that all PJMNet data transmitted between PJM Control Centers and PJM Member control centers is encrypted.

3.2.1.2 JetStream

Jetstream is a data system to connect remote assets and PJM to satisfy real-time, market and other data transactions. Small generators, load response assets and other market participants can communicate with the PJM Energy Management System through the Jetstream system. The connecting network is the Internet and the data protocol is DNP3. High levels of security are provided using Transport Layer Security and a Public Key Infrastructure. This system is described in technical and procedural documents which can be found on the PJM website.

Jetstream can only be used for qualifying generation assets, which are described in Exhibit 4 Manual 14D: Generator Operational Requirements.

3.2.2 PJM EMS Communication Protocols

PJM EMS utilizes 2 types of communication protocols:

- Inter-control Center Communications Protocol (ICCP)
- Distributed Network Protocol (DNP3)

ICCP is a comprehensive, international standard for real-time data exchange within the electric power utility industry. It is intended to support inter-utility real-time data exchange which is vital to the operation of interconnected systems. PJM uses ICCP protocol to connect with PJM Member control centers and qualifying generating plants over PJMnet.

PJM supports ICCP Block 1 (scanned data) and ICCP Block 2 (exception data) of the ICCP protocol. PJM Members are required to support ICCP Blocks 1 and 2 at a minimum to exchange data with PJM via ICCP.

DNP3 over TCP/IP is a widely used communication protocol in the electric industry. It is intended as a substation protocol to support real-time SCADA data exchange. PJM uses the DNP3 protocol to connect with PJM Member substation RTUs over PJMNet for qualifying generators or Jetstream for smaller plants.

PJM supports Object 30 Variation 2 for Analog data, Object 1 Variation 2 for Discrete data and Object 20 Variation 1/Object 21 Variation 1 for Accumulator data. PJM Members are required to support Object 30 Variation 2 and Object 1 Variation 2 at a minimum to exchange data with PJM via DNP3.

Data types, message structures and other interoperability details are discussed and coordinated between PJM and the connecting member prior to integration.

3.2.3 EMS Data Exchange

EMS data is exchanged between each PJM Member's EMS and the PJM EMS periodically on one of several fixed cycles, as well as on demand, by exception, and interactively.

- The EMS data sent cyclically from PJM Members to PJM includes the following types of information sent with associated data quality codes:
  - data needed for the PJM control programs
  - data needed for monitoring generation
  - data needed for monitoring transmission
  - data needed for monitoring interchange
- The EMS data sent cyclically from the existing PJM EMS to each PJM Member's EMS includes the following types of information:
  - System control data
  - Generation and transmission information required for monitoring and security analysis programs

    - Area Regulation data
- Cyclic data exchanged at the fast scan rate (i.e., two seconds) is used to develop the PJM Area Control Error (ACE) and associated individual PJM Member Area Regulation megawatt values. Cyclic data exchanged at a slower scan rate (i.e., every ten seconds) is used to develop dispatch control values, security monitoring, and data tracking.
- PJM Members are responsible for the accuracy of the data they send to PJM. A maximum of 2% overall inaccuracy in the repeatability of data from transducers or potential transformers/current transformers (PTs/CTs) is allowed for instantaneous monitored values (see Section 5.2). Hourly MWh readings data must be provided to PJM daily to ensure accurate billing. Regular calibration of PJM Member metering is necessary to keep the data as accurate as possible (see Section 5.3).
- Data exchanged either by exception, on demand, or interactively between PJM Member's and the PJM EMS include the following:
    - Breaker, disconnect, and line status changes, with associated data quality code information (integrity scans for exception data shall be at 30 minute intervals)
    - Emergency messages in text format

PJM members with an ICCP connection to PJM EMS shall provide ICCP data definition files to PJM that includes all the measurements available to PJM via ICCP with the following information:

- ICCP Object ID
- Equipment and Measurement Description (i.e. Station, Voltage Level, Equipment Name, Measurement)

An updated ICCP data definition file should be provided to PJM at least every 6 months or upon PJM's request.

3.2.4. Data Exchange during EMS Datalink Outages

Each PJM Member is responsible for determining data quality indicators for all data transmitted to PJM (See Section 2.3.6 for quality codes). Both failed individual values and any value calculated using a failed point must be flagged. At times, state estimated values may suffice for an interim period.

If PJM encounters any real-time data quality issues that affect Real-time Assessments, PJM will notify the PJM Member via email or phone call. When notified, PJM Member shall address the data quality issue (see Section 2.3.1).

PJM Members shall send data to PJM during planned and unplanned outages based on the type of outage, the available alternative communication method and the thresholds for reporting listed below.

Below are the acceptable alternate methods of communication based on the outage type in order of preference:

1. RTU/Device Outages (when the ICCP/DNP3 communication is up, but a specific data set is lost due to RTU or telemetry device outage):
    a. The PJM Member operator shall manually replace the failed measurement data within their EMS, which is communicated to PJM automatically via the existing EMS data link. See Section 3.2.4.1 for requirements.
    b. The PJM Member operator shall call PJM Control Room to verbally communicate the failed measurement data needed by PJM Control Room. See Section 3.2.4.2 for requirements.
    c. The PJM Member shall securely transfer measurement data files using a mutually acceptable transfer protocol. See Section 3.2.4.1 for requirements.
2. EMS Link Outages (when the data link is down and all incoming EMS data from the member company is telemetry failed):
    a. The PJM Member shall securely transfer measurement data files using a mutually acceptable transfer protocol. See Section 3.2.4.1 for requirements.
    b. The PJM Member operator shall call PJM control room to verbally communicate the measurement data. See Section 3.2.4.2 for requirements.

3.2.4.1 Requirements for Electronic Alternate Data Communication Method

AltSCADA

PJM provides an alternative communication path as an emergency backup for ICCP links, in particular between TOs and PJM, Using relatively simple and robust technologies, such as sftp (PJM SecureShare), simple file formats (.CSV), and low periodicity updates(max read every 5 minutes), keeps the initial setup and maintenance very low while also being independent and separate from many core SCADA components. This system can bridge events where the TO ICCP server, the networking (PJMnet) or the PJM ICCP client have failed, including potentially cyber attacks.

During use, members package a snapshot of all data mapped through the relevant ICCP link, by any means optimal for them, into a compliant CSV file, which is uploaded via SecureShare to PJM, which PJM can process as a full SCADA update. This would allow for sufficient updates to satisfy critical SCADA functionality, such as supporting RTAs and real-time markets, while SCADA or network fault conditions were repaired. TOs must at least be receiving a nominal degree of updates from substations and RTUs and PJM's core SCADA system data processing must still be operational. During actual emergency use of the AltSCADA system, TOs should continue to verbally communicate significant events per 3.2.4.2.

AltSCADA is currently optional for all PJM TOs, but all are encouraged to participate. Interested parties should reach out to EMSSupport@pjm.com for details, setup and testing. PJM may expand usage in the future to include GOs or similarly send PJM data snapshots to members.

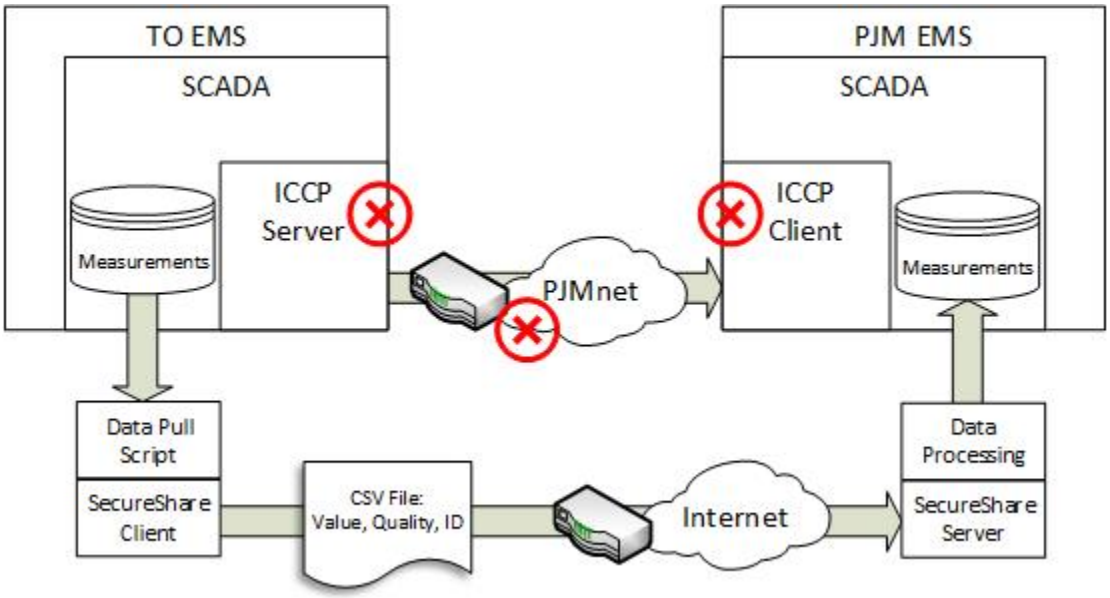

If using AltSCADA or manually entering values, the PJM Member shall follow the procedure below:

1. The following measurement data shall be updated at least every 30 minutes via manually entered values or via the secure data file transfer:
    a. Tie Line Flows, both internal and external
    b. Transmission MW and MVAR flows and bus voltages at ≥ 100 kV
    c. Generation MW and MVAR flows at ≥ 25 MW capacity
    d. Facility Rating values for all monitored Transmission Facilities with dynamic (telemetered) Transmission Facility Ratings, depending on the interim ratings approach the facility owner decides to take during a dynamic rating outage per Manual 03 Section 2.1.1.2.

2. In addition to the regular electronic updates above, if one of the significant events described below occurs, the PJM Member shall verbally notify the PJM control room immediately:
   a. The loss of any equipment ≥ 100kV
   b. A change of ≥ 25 MW of any generator MW flow
   c. A change of ≥ 100 MW flow at ≥ 500kV
   d. A change of ≥ 50 MW flow at < 500kV
   e. A transformer tap position change occurs at ≥ 230kV
   f. A breaker status change at ≥ 100kV
   g. A change to the dynamic Transmission Facility Ratings, depending on the interim approach the facility owner decides to take during a dynamic rating outage per Manual 03 Section 2.1.1.2.

If the actual measured values cannot be given for the measurement data described above, the PJM Member shall provide the best data available, i.e. MVA, state estimated data, etc.

3.2.4.2 Requirements for Verbal Alternate Data Communication Method

If the PJM Member is unable to send a secure transfer file or manually replace values, then the PJM Member shall follow the procedure below:

1. The PJM Member shall check at least every 30 minutes whether there are any significant changes in their system compared to the last measurements verbally or electronically communicated to PJM Control Room. If there are, the PJM Member operator shall call PJM control room to verbally communicate these changes. Significant events include:
   a. The loss of any equipment ≥ 100kV
   b. A change of ≥ 25 MW of any generator MW flow
   c. A change of ≥ 100 MW flow at ≥ 500kV
   d. A change of ≥ 50 MW flow at < 500kV
   e. A transformer tap position change at ≥ 230kV
   f. A breaker status change at ≥ 100kV
   g. A change to the dynamic ratings, depending on the interim approach the facility owner decides to take during a dynamic rating outage per Manual 03 Section 2.1.1.2.

If the actual measured values cannot be given for the measurement data described above, the member company shall provide the best data available, i.e. MVA, state estimated data, etc.

Members should use the appropriate notification procedures for each outage of data provided to PJM. See Section 3.8 for notification requirements.

3.3 Synchrophasor System Data Exchange

Synchrophasor System information is exchanged between the PJM Synchrophasor System and the Synchrophasor System of PJM members as well as other RTOs and ISOs to support real-time and off-line functions such as voltage stability monitoring, oscillation monitoring and detection, situational awareness, the archival system, modal analysis, and a Wide Area View.

3.3.1 Synchrophasor Network

PJM and PJM members exchange phasor information between their respective Synchrophasor systems via high-speed real-time data acquisition networks, using the protocol specified in IEEE C37.118 communication standard. From PJM member's phasor data concentrator (PDC) to PJM's super phasor data concentrator (SPDC), PJM will support the following:

- Dedicated dual-redundant Multiprotocol Label Switching (MPLS) network (Phasornet)
- Dual-redundant MPLS network (PJMnet) shared with the existing ICCP datalinks.

The Synchrophasor system connects PJM to PJM member Transmission Owners (TOs), Market Operations Centers (MOCs) or generating plants. The number of physical interfaces and their capacity will be determined based on the impact of the PJM member's facilities on overall PJM Operations. TOs, MOCs or generating stations are expected to install phasor measurement unit(s) and use their own Synchrophasor system to collect data. PJM will provide either Phasornet or PJMnet network connections, and router(s) at the PJM member company location as appropriate to the application.

The responsibilities of PJM and PJM Members for the initial establishment and on-going maintenance of the Synchrophasor communication system are to those of EMS communication system which is specified in Section 3.2.4.

3.3.2 Synchrophasor Data Exchange

Synchrophasor data is exchanged between PJM Members' Phasor Data Concentrators (PDC) and PJM Super Phasor Data Concentrator (SPDC) continuously at a rate of 30 samples per second.

Synchrophasor technical guidelines for PMU and PDC configurations can be found on the PJM website.

All data items, regardless of type, are collected and disseminated at a frequency of 30 samples per second, and must be sent to PJM with the associated data quality codes in compliance with IEEE C37.118 communication standards.

The following types of synchrophasor data are sent continuously from PJM Members to PJM with the associated quality codes:

- Data needed for monitoring generation (See Manual 14D: Generator Operational Requirements, Section 4.3.4)

- Data needed for monitoring transmission, which includes system frequency, positive sequence current and voltage

PJM Members are responsible for the availability and the quality of the synchrophasor data they send to PJM. The table below shows the data quality requirements applicable to synchrophasor data.

Metric Type	Minimum Accuracy	Definition
Link Availability	99.80%	Link availability is defined as the uptime of the TCP/IP connection of the C37.118 stream from the site PDC to PJM SPDC.
Good Quality Data	97.00%	Good quality data is defined by the IEEE C37.118 protocol as a “0x0000” status word per PMU within the stream.

PJM members shall report the outage of any data communication equipment (i.e. PMUs, PDCs, and data links) connecting the facility to the PJM Synchrophasor system using the following email address: phasoroutages@pjm.com. Scheduled outages shall be reported one day in advance, and again prior to switching the equipment out of service. Any unscheduled outage of Synchrophasor equipment shall be reported immediately after such an occurrence. When the in-outage equipment is returned to service, PJM Member shall notify phasoroutages@pjm.com to validate that the data is being retransmitted to PJM.

To support the recovery of PMU data, the member shall maintain storage of PMU data locally as defined within the technical guidelines.

3.4 OASIS Information Exchange

PJM is responsible for providing the Open Access Same-time Information System (OASIS) for PJM RTO Transmission Providers and Customers (see the OASIS User Guide). The information on the OASIS network includes Available Transfer Capability and other important transmission and ancillary services data. Market Participants are responsible for establishing Market Operations Centers which implement the necessary communications with OASIS.

3.4.1 Transmission Customer Communications

Transmission Customers use the public Internet to access PJM OASIS. OASIS Customers must register with PJM before they access the PJM OASIS system and login each time a connection is established. The primary interface to request transmission or ancillary service and to provide information to PJM OASIS is on-line data entry forms available on the OASIS display pages. These forms are used to request the purchase of services and to offer products for sale, as well as to post other transmission-related information. Instructions on how to interface with OASIS

are available on the OASIS display pages or from the PJM OASIS Account Administrator. If a Transmission Customer enhanced OASIS connections, a direct connection is available, at additional cost.

3.4.2 Transmission Provider Communications

Transmission Providers may connect to the PJM OASIS system via the Internet and it is possible for them to use SQL*NET protocol and ORACLE Forms user interface software to display and post information to the OASIS. ORACLE Forms are used to post and modify data, approve purchase requests, offer products for sale, and post “Want” ads. PJM is responsible for administering and posting information associated with the provision of transmission service as required by FERC.

3.5 EMS Backup Communications

PJM utilizes two systems (AC1 and AC2) for PJM EMS control information as backups for one another. PJM requires all ICCP members to send identical sets of data to both systems by use of two ICCP Links. Members may also use these links to receive identical PJM ICCP data from both systems, or utilize a third ICCP Links that will be used to receive data from PJM. This third link must have the ability to connect to AC1 and AC2 to receive data.

PJM Transmission Owners with Ties to transmission systems external to PJM will provide tie line information to the PJM VBUCC system as a backup to the PJM AC1 and AC2 systems.

3.6 Real-Time Analysis Monitoring Requirements for System Security

PJM analyzes the system security of the PJM system using information telemetered from PJM Members. Phase and line-end location of metering is as mutually agreed between the two connected systems, must be consistent with established system metering, and must be coordinated with PJM. The following analog and status information is required for this analysis:

3.6.1 Required SCADA Data

Required Analog Data:

- Voltages for buses at 34 kV and above (or 69 kV and above, if lower voltage equipment is not monitored)
- MW and MVAR values for generating units greater than 1 MW including steam, nuclear, hydro and combustion turbine units and non-utility generator units (usually individual unit generation but total station generation may be telemetered in special circumstances) if connected directly to the transmission system
- MW and MVAR values (both ends) for designated transmission lines at 69 kV and above (if single-phase metering is employed, the B-phase is preferred)

- Transformer phase angle regulator (PAR) tap positions for modeled and controlled transformers (high side metering or low side with a loss calculation)
- MVAR values for synchronous condensers
- MVAR injection on 34 kV and above buses (or 69 kV and above if lower voltage equipment is not monitored)
- Load Tap Changing (LTC) transformers tap position for transmission transformers with a rated low side voltage of 100kV or greater and the ability to change taps while energized and loaded.
- Load Tap Changing (LTC) transformers tap position for Generator Step-Up (GSU) transformers with a rated high-side voltage of 100kV or greater and the ability to change taps while energized and loaded.
- Selected station frequencies
- Frequency of Acquisition — ≤ 10 seconds

Required Status Data:

- Circuit breaker status for each modeled facility at 69 kV and above
- Breaker and disconnect statuses as modeled
- Frequency of Acquisition — Upon change of status.

PJM Members have the capability to validate SCADA data and send accurate manually adjusted data until inaccurate metering is corrected if state estimated data will not suffice. In case of a computer failure or outage, all data should be sent once the computer reinitializes. See Manual 03: Transmission Operations for more information.

3.6.2 Required Synchrophasor Data

For substations with three or more non-radial transmission lines at 200 kV or above, and for substations with four or more non-radial transmission lines between 100 kV and 200 kV, Synchrophasor measurements are required for the following equipment types (see the applicability of requirements below). All measurement points must be in the form of positive sequence values.

- Voltages for busses at 100 kV and above
- Line-terminal voltages and currents (both ends) for transmission lines at 100 kV and above
- High-side/low-side voltage and current values for transformers with a rated low side voltage of 100 kV or greater
- Dynamic reactive device power output (SVCs, STATCOMs, Synchronous condensers, etc.)

Note:
These Synchrophasor data requirements shall only apply to new Regional Transmission Expansion Plan (RTEP) projects, other than network upgrades for the purpose of interconnecting a new generator, presented to the Transmission Expansion Advisory Committee (TEAC) and/or the Sub Regional RTEP Committees (SRRTEP) for inclusion or integration in the RTEP on or after June 1, 2021. PMUs will increase the level of observability allowing PJM to better perform its reliability obligations, and facilitate compliance with the applicable NERC reliability standards as the grid continues to evolve. In situations where the installation of a Synchrophasor device causes technical challenges resulting in unusually high installation costs, PJM may, on a case-by-case basis, waive the requirement or approve an alternative Synchrophasor device installation plan proposed by the Transmission Owner or Designated Entity. Supporting equipment (PDC, GPS clock, etc.) installed per this requirement shall include necessary design and configuration to make the device 'CIP ready'. PJM will evaluate the effectiveness of the Synchrophasor measurement requirements on a periodic basis and work with PJM stakeholders to modify such requirements as necessary.

3.7 Dispatching Requirements

The following requirements are intended to assure reliable dispatch and operation of the PJM system:

- External Tie Line MW data is telemetered to PJM as well as the neighboring balancing authority area, control area, or electric system region, and emanates from a common agreed upon source using common primary metering equipment. See Section 5.2 for PJM's definition of Tie Lines and associated metering requirements.
- Tie Line MWH data for each hour is reported to PJM on a daily basis via Power Meter. PJM Dispatch utilizes an EMS alarming process to compare State Estimator data to Tie Line telemetry in order to detect data accuracy issues on a more frequent basis than hourly intervals. See Section 5.3 for associated Billing Meter requirements.
- Combustion turbines supply accurate real-time status information and report failure-to-start situations.
- 500 kV and significant 345 kV and 230 kV locations require disturbance recording equipment for post-disturbance analysis. These devices should have the capability to retain historical data for future analysis.
- PJM Members participate in the payback of the accumulation of inadvertent interchange as directed by PJM.
- The amount of generator regulating capacity reported to PJM is accurate and committed to the system.
- The amount of generator reserve capacity reported to PJM is accurate and committed to the system.

PJM Members, generating stations, and fault recorders are time synchronized to assure accurate recording times for system events.

3.8 Planning, Coordination and Notification of System Changes and Events

PJM EMS Advanced Applications solves a single State Estimator solution, which serves as the basis for the PJM Security Constrained Economic Dispatch application (SCED) and Network Applications Package. Interruptions to data or processing of inaccurate data may result in non-convergence to the state estimator, which adversely impacts the efficiency of generation dispatch and could result in the inability of PJM to monitor the transmission system. Since PJM operates a single state estimator, unnecessary ICCP link outages or database maintenance should be avoided.

Any scheduled system change or event that affects or could potentially affect data received by or sent by PJM must be coordinated per Section 3.8.1. Additionally, emergency or unscheduled changes or events must be immediately handled per Section 3.8.2.

Major system changes or events, beyond regular maintenance and operations activities, require more advanced planning notification and coordination through PJM Member Relations, as detailed Section 3.8.3.

In all cases, data outages are tracked and reported as detailed in Section 3.8.4.

3.8.1 Regular Planned System Outages

Members and PJM should provide an email coordination notice to all affected parties 24 business hours in advance of regular system changes or events that could affect ICCP data link communications or the data exchange with PJM. Some typical events that fall under this category include:

1. Any action affecting ICCP data sent to PJM (EMS/GMS Database updates, server failovers, …)
2. Significant Software Enhancements
3. Communication line outages
4. Backup center testing
5. Failovers to alternate sites
6. Network and Firewall maintenance
7. RTU outages or changes to RTU data sent to PJM for RTUs connected to EHV (345kv and above) facilities.

The PJM EMS Networking group will coordinate technical details or additional support as needed with the member company.

Members providing notification should send it to the following email address (outage@pjm.com).

The notification should include:

1. The action being taken by the member company (see 1 above)
2. Planned length and expected time of the outage
3. Potential impact to PJM
4. Member contact information

Member Company System Operator should coordinate final outage with the PJM Dispatch Supervisor (610-666-8806) at least 15 minutes prior to the event.

PJM staff has the authority to:

- Reschedule or cancel a member company scheduled planned outage based on system conditions.
- Reschedule or cancel a member company scheduled planned outage based on existing ICCP data link outages.
- Deny a request for a member company planned outage if requested time has been previously scheduled.

PJM will communicate any additional system conditions which would cause the outage to affect system reliability even if the conditions are not directly related to the requesting company. This communication can be through either a PJM Dispatcher or a member of the EMS Networking group working with the impacted member company. The communication will not contain any information that can identify another member company but will contain enough information to let the affected member company understand the severity of the situation.

PJM fully understands the logistics and economic effect a delay or postponement can have on a member company. If the member company wishes to challenge or contest the delay or postponement, they should contact the PJM Shift Supervisor.

PJM will notify member companies of PJM initiated outages via an email list at least 24 business hours in advance through a self-subscribing alias Exchange list.

In order for a Member Company to receive an email alert of a PJM generated outage, the company must have a permanent email group address for this purpose. PJM will send outages to that email group address, not the address of an individual person, since individuals are frequently reassigned and change responsibilities. Additionally, the member company must subscribe to the outage list at pjm-linkoutage@lists.pjm.com.

PJM will follow-up significant outages with an All Call message 15 minutes prior to the outage.

In order to ensure the reliability of the system, the following time periods are not allowed for planned outages:

- Outages should not be planned for execution during specific resource critical times including PJM quarterly model build days, due to heightened operational and technical complexity and risk. The PJM Model Build Schedule is posted on the PJM Data Management Subcommittee webpage. PJM will make all efforts to announce and post any schedule changes at least one week in advance.
- Outages are not allowed during other unique and infrequent major events for PJM, such as major EMS upgrades or major company integrations. Major PJM events will be specially communicated to all impacted members.
- PJM holidays are not preferred for outages, due to constrained resource availability. The PJM Business Holiday Calendar is posted on the Billing, Settlements and Credit webpage.
- Multiple company ICCP data link outages can result in PJM EMS Security Analysis and potential system reliability issues if permitted to occur simultaneously, even during moderate load levels. No more than one member company planned outage will be accepted in any given time period.
- Further restrictions may be enforced when peak load operations are projected in any Control Zone.

Exceptions may be requested through outage@pjm.com.

3.8.2 Emergency or Unscheduled System Outages

Any unscheduled system change or event that affects or could potentially affect data received by or sent by PJM must be immediately communicated.

To the extent possible, emergency changes should occur prior to 11:00 EPT during summer operations and between 10:30 – 14:30 EPT during winter operations. If emergency work that cannot be delayed or rescheduled requires an outage, the PJM Shift Supervisor will work with the emergency coordinators for approval and scheduling.

During an emergency or unscheduled outage, PJM will perform the following actions:

- The PJM System Operator will:
  - Contact the member company operator to discuss communications issue fully describing extent of communication problems to ensure the member company understands the magnitude of the problem.
  - Contact PJM support staff to resolve communication issue, providing the member company contact person and phone number obtained from the member company operator if not already known.
- The PJM Support Staff will:
  - Contact the member company support staff to resolve communication issue.

  - Notify the member company support staff and the PJM System Operator when system has returned to normal.

The following requirements apply to all Transmission Owners (TOs) and Generation Owners (GOs) during an emergency or unscheduled system outage:

- The TO/GO operator shall:
  - Contact PJM Control Room to discuss communication issue fully describing extent of communication problems to ensure PJM Control Room understands the magnitude of the problem.
  - Contact support staff to resolve communication issue.
  - Provide a consistent contact person and phone number to PJM Control Room to enhance efficiency of communications avoiding potential reliability issues.
  - Notify PJM Control Room when system has returned to normal
- The TO/GO support staff shall:
  - Call the PJM EMS Networking Rapid Response Phone Line to coordinate a response to the emergency/unscheduled system outage at 610-666-8978.
  - Attempt to provide input into the expected length of the outage.
  - Notify PJM support staff when system has returned to normal.
- Incoming data to PJM should be updated as outlined in Section 3.2.3 of this manual.

In addition, the following actions apply during a Generation Owner (GO) emergency or unscheduled system outage:

- The GO operator (MOC Operator) shall:
  - Recognize previous SCED approved base-points are stale while ICCP link problems exist.
  - Verbally communicate manual dispatch directions to plants if communication problems are not resolved within 10 minutes.
  - Log manual dispatch direction.
- The PJM System Operator will:
  - Recognize previous SCED approved base-points the member is receiving are stale while ICCP link problems exist.
  - Communicate zonal cost if communication problems are not resolved within 10 minutes.
  - Communicate targeted generation dispatch if transmission constraints arise.
  - Log manual dispatch direction.
  - Reassign regulation to other MOC units as necessary.
  - Elevate PJM/MOC communication to Shift Supervisor level if reliability issues arise.

In addition, the following actions apply during a Transmission Owner emergency or unscheduled system outage:

- The TO member company operator (TO Operator) shall:
  - Contact PJM Dispatch regarding transmission constraints.
  - Where necessary, staff critical substations to support transfer of critical data to PJM.
- The PJM System Operator will:
  - Communicate impact on ability to monitor transmission system.
  - Update EMS with the critical data provided by the Transmission Owner.
  - Manually redispatch, as necessary, to control transmission constraints based on Transmission Owner's analysis.
  - Ensure all actions are logged.

3.8.3 Major System Changes and Events

Any change to a communication path is considered a significant change requiring advanced notification and detailed coordination among multiple groups at PJM. Some examples of this kind of activity include new network circuits, new EMS systems, IP address remapping, or major software upgrades.

The PJM and member activities that are required, summarized here, include:

1. Communication to PJM Member Relations: custsvc@pjm.com
2. Point to Point Data Validation – PJM Telemetry Support: PJMTelemetrySupport@pjm.com
3. Link and Failover Testing – PJM EMS Networking: emsnet@pjm.com
4. Regulation Market Coordination and Testing – PJM Real Time Market Operations and Performance Compliance: RegulationTesting@pjm.com

These required activities required to accommodate the PJM Member's proposed EMS cutover are listed here in detail:

1. Communication to PJM Member Relations
    a. All changes that impact a server to server communication path should be communicated to PJM Member Relations one month prior to the production date. These include:
        i. Implementation of a new EMS system
        ii. Implementation of new PJMnet communication circuits
        iii. Replacement or operating system upgrade of ICCP Servers
        iv. New or replaced Network equipment such as Firewalls, Routers, and Switches. (Only Failover Testing is required)
        v. Upgrade to ICCP Software, MMS Stack, and New Version of EMS Vendor Software.
        vi. Change of IP Addressing of ICCP Servers by member
    b. PJM Member Relations will coordinate a conference call with all required parties to discuss the testing and cutover plan. The plan should be documented by the PJM Member and sent to PJM Member Relations for distribution.
2. Point to Point Data Validation
    a. Requires the following prerequisites to be in place:
        i. Review and coordination of the complete ICCP point list exchanged between the member and PJM a week prior to the scheduled testing.
        ii. The data feeding the PJM stage system needs to be live and updating, not a copy of the members existing EMS.
    b. Testing to the PJM Stage system should be requested at least 2 business days in advance.
    c. Testing is to be performed on the PJM Stage system at least two weeks prior to the cutover. Testing will include:
        i. The member manually replacing and failing both analog and status points to ensure proper quality code configuration.
        ii. PJM will compare all of the data the member is sending to Stage from their new system to their legacy system to verify data accuracy. Any data found to be incorrect will need to be retested at a future date, prior to the cutover.

3. Link and Failover Testing
    a. Requires the following prerequisites to be in place:
        i. Previous Agreement between Member and PJM on the System configuration and how the testing will be performed. (See Attachment C: PJMnet ICCP Failover Tests)
        ii. Point to Point Data Validation
    b. The Link and Failover Testing needs to test all the links operated in all of the possible combinations. (See Attachment C)
    c. All testing needs to be completed and approved by PJM prior to the cutover to Production.
4. Regulation Market Coordination and Regulation Testing, see Manual 12: Balancing Operations, Section 4.5.1 for information on the Regulation Qualification Test
    a. Requires the following prerequisite to be in place: Member should send the list of units that participate in the Regulation market to RegulationTesting@pjm.com at least one week prior to the cutover.
    b. An hour prior to scheduled cutover, and until retest the resources will not be qualified to offer regulation. Generation providing regulation must be taken out the Regulation Market.
    c. Regulation testing will likely be required on all or some of the generators to recertify that the Regulation functionality has been restored, and that the generators can respond accurately and timely.
    d. After successful completion of Regulation Performance Testing Requirements and Test Scoring, PJM Real Time Market Operations will enable any generation affected by the cutover to be available to bid again into the Regulation Market.
5. Cutover to Production - Coordination led by EMS Networking
    a. Requires the following prerequisite to be in place: Communication and testing must be completed and approved by PJM.
    b. The date and time for cutover should be agreed upon by all parties at least one week prior to the cutover.
    c. Members should send an email to outage@pjm.com 24 business hours in advance of significant system changes that could affect ICCP data link communications, or the data exchange with PJM. This process is described in PJM Section 3.8.
    d. Member to contact EMS Networking prior to the production cutover to coordinate any special link configurations and communicate with PJM Dispatch.
    e. PJM Telemetry Support will validate all ICCP points in the production system.
    f. EMS Networking ensures the links are in the final configuration, and communicates with the member and PJM Dispatch that the changes are complete.

See Attachment C for details about the different modes of failover testing that may be required.

3.8.4 Outage Tracking

All outages (planned and unplanned) causing link reliability to drop below 99.8% in a 24 hour period will be reported and tracked with a cause code by PJM.

In the event that PJM detects a member outage of one hour or greater, PJM will immediately email the appropriate SIS representative in order to alert that representative and facilitate determination of outage details.

The following information items will be tracked for outages:

1. Company Identifier (3 letter)
2. Outage length (in minutes)
3. Cause code (see table):

Code	Description
PTV	PJM Telecom Vendor
MTV	Member Telecom Vendor
PPO	PJM Planned Outage
MPO	Member Company Planned Outage
PUO	PJM Unplanned Outage
MUO	Member Company Unplanned Outage
OTH	Other

Section 4: Interpersonal Communication Capability

The following sections document PJM's Interpersonal Communication and Alternative Interpersonal Communication capabilities in accordance with NERC Standard COM-001. The purpose of these Interpersonal Communication capabilities is to ensure necessary voice and facsimile communication methods are established to maintain the reliability of the Bulk Electric System (BES).

4.1 Dispatch Voice & Facsimile Communications

As required by NERC Standard COM-001, the dispatch voice system provides high-priority Interpersonal Communication capability. This capability is between the PJM Control Centers at Valley Forge and Milford, as well as between PJM and PJM member Transmission Operators (TOPs), Transmission Owners (TOs), Generation Operators (GOPs), Generation Owners (GOs), Distribution Providers (DPs) and other internal entities, and external Reliability Coordinators (RCs), Balancing Authorities (BAs), TOPs and TOs, as described below.

PJM also uses Polycom video conferencing units to enhance communications between the Valley Forge and Milford Control Centers.

The dispatch voice system hardware consists of the All Call system, Ring Down circuits, and manual dial circuits. Equipment at PJM includes a British Telecom (BT) digital switch and a Nortel Meridian PBX. Access and interfacing to the communications service providers is configured so that either switch can operate in stand-alone mode, but economy and performance are optimized when they are operating together.

Communications via facsimile machines is another redundant means of exchanging information between PJM operations, accounting, and other parties, including PJM Members, other internal entities and external entities, as described below.

4.1.1 All Call System

The All Call system is used by PJM operators to contact Transmission Owner (TO) Control Centers, Market Operations Centers (MOCs), and Load Serving Centers (LSCs), either individually or simultaneously for information exchange under both normal and emergency situations. The All Call is based on the Dialogic Communications Corp. Communicator, an emergency notification system that provides PJM system operators the ability to broadcast voice, text or fax messages. The All Call operates over PSTN (Public Switched Telephone Network). The system is capable of sending messages to 72 numbers simultaneously. If the more than 72 locations must be contacted the system will dial the additional numbers as lines become available. Continuous retry logic ensures 100% of the facilities are contacted by cycling through primary, secondary, and tertiary numbers until positive confirmation of message receipt. Both real-time displays and reports of response status are available to PJM System Operators.

Each control facility is required to have a dedicated PSTN line for the primary All Call number. Secondary and tertiary do not have to be dedicated to the All Call System; they may be PBX or cellular, not pager. Acknowledgement of message receipt by each participant is required. Logs of responses and response times are provided to PJM's Performance Compliance department for analysis.

4.1.2 Ring Down Circuits

Private Lines with automatic ringing (PLAR) or dual central office (DCO) lines are used to provide Ring Down or simulated Ring Down capability to TO Control Centers, some Market Operations Centers, and Load Service Centers. These circuits provide virtually instantaneous point to point access between PJM and PJM Members.

4.1.3 Manual Dial

In addition to private line capability, the PJM BT switch also interfaces with both the PJM Meridian PBX and Central Office (CO) Lines to provide manual dial capability to all categories of PJM Members via the Public Switch Telephone Network (PSTN). Manual dial serves as backup to the Ring Down system in case that system fails.

4.1.4 Facsimile Communications

Facsimile communications is widely used in the PJM Control Center to communicate with all PJM Members. Facsimile machines support energy marketing, energy scheduling, unit scheduling, accounting, dispatch operations, and system restoration. These facsimile machines are connected to either the PJM Nortel Meridian PBX or CO Lines.

4.1.5 Member Communications Requirements

As required by NERC Standard COM-001 and TO/TOP Matrix, each Member shall have internal Interpersonal Communication capabilities for the exchange of information necessary for the Reliable Operation of the BES between the Member TO Control Center and field personnel, each Distribution Provider, Generator Operator, neighboring Member TOs internal to PJM, and neighboring TOs/TOPs external to PJM as applicable.

4.2 Alternative Interpersonal Communication Capability

The dispatch voice system (All Call, Ring Down, and manual dial PBX) is designed to provide voice communications during normal circumstances. Should the PJM primary All Call System, Ring Down, Manual Dial, and Facsimile Communication fail, the satellite telephone system will serve as Alternative Interpersonal Communication capability.

Transmission Owners shall designate an Alternative Interpersonal Communication capability for voice communications with PJM, neighboring Transmission Owners, internal or external to PJM, and neighboring TOPs, as appropriate per NERC Standard COM-001 R4.3. Transmission Owners shall test the designated Alternative Interpersonal Communication capability for voice

communications at least once every calendar month. If the test is unsuccessful, Transmission Owners shall initiate action to repair or designate a replacement Alternative Interpersonal Communication capability for voice communications within 2 hours per NERC Standard COM-001 R9.

4.2.1 Satellite Telephones

Satellite telephones are used by PJM dispatchers as Alternative Interpersonal Communication capability for voice communications. These telephones are used to protect against loss of common carrier services.

Transmission Owners shall have satellite phone capabilities at both their primary and back-up facilities. Satellite phones are required for all Generation Operator (GO) control centers which control one or more units totaling 500 MW or greater.

If the emergency plan for a generator control center is to co-locate with a transmission control center which has a satellite phone, this will meet the requirement, however, companies need to examine the systems for availability of both transmission and generator communications under emergency conditions.

Companies need to also provide similar (radio, satellite, etc.) redundant communications from their control centers to their plants. PJM may also require specific vital generation units to maintain a satellite phone.

Functional Requirements for Satellite Phones:

- Compatible with PJM satellite network
- Ability to receive dedicated all-call
- Ability to bypass the ground phone (PSTN) network

4.3 Additional Methods of Interpersonal Communication

In addition to the satellite phone system that serves as Alternative Interpersonal Communication capability, the following systems provide further methods of Interpersonal Communication capability in the event the normal system becomes unavailable:

4.3.1 Business Voice System

Each dispatch position is provided with a standalone phone set, configured with speed dial using CO Lines, which serve as a backup for the PJM BT switch to provide communication between the PJM control center and all PJM Members in the event of BT switch failure.

4.3.2 Cellular Telephones

Cellular telephones are used by PJM dispatchers as an alternate method of voice communication. Cellular phones can be used to coordinate activities while physically moving personnel to the PJM emergency dispatch center.

4.4 Interpersonal Communication Capability Failure

In the event that PJM detects a failure of its Interpersonal Communication capability that lasts 30 minutes or longer, PJM will notify member Transmission Owners, Generator Operators, adjacent Reliability Coordinators, Balancing Authorities, and synchronously-connected Transmission Operators within 60 minutes of the detection of the failure of its Interpersonal Communication capability.

Each Transmission Owner shall notify PJM and the following entities within 60 minutes of the detection of a failure of the Transmission Owner's Interpersonal Communication (voice communication) capability that lasts 30 minutes or longer:

- Distribution Providers in the Transmission Owner area
- Generator Operators in the Transmission Owner area
- Neighboring Transmission Owners external to PJM with standing Interpersonal Communication paths to the PJM Transmission Owner

PJM System Operations Division employs multiple forms of voice communications that are available from both PJM control rooms (Valley Forge and Milford). Within each PJM control room site there are multiple levels of communication redundancy, including dedicated ring-downs, manual dial, business voice systems, cellular, All-Call, and facsimile communications. Likewise, PJM Member TOs employ multiple forms of voice communications with multiple levels of redundancy, for example, but not limited to, dedicated ring-downs, manual dial, business voice systems, cellular, and radio. All of these may, collectively, form the basis of a TO's Interpersonal Communication capability.

The notification requirements associated with NERC Standard COM-001 R10 and associated tasks identified in the TO/TOP Matrix apply to the designated Interpersonal Communication systems.

And, for this reason, Member TOs are required to deploy the notifications established in the assigned tasks for COM-001, R10 only when the Alternative Interpersonal Communication is the sole communication(s) available, which occurs after a failure of all other Interpersonal Communication that form the basis for the Member TOs Interpersonal Communication capability. A loss of any elements within the Interpersonal Communication capability (e.g. manual dial and radio fail) does not require notification when the member has other forms of voice communications that it has designated as forming the basis of its Interpersonal Communication capability (e.g. cell phone) as long as all applicable parties have a viable shared communication path.

4.5 PJM Communication Protocol

4.5.1 Purpose

PJM has developed these Communication Protocols in accordance with NERC Standards COM-002 and TOP-001. The purpose of these protocols is to improve communications for the issuance of Operating Instructions to reduce the possibility of miscommunication that could lead to action or inaction harmful to the reliability of the Bulk Electric System (BES).

4.5.2 Applicability

These protocols apply to all PJM operators and operators/dispatchers at member companies that issue and/or receive Operating Instructions.

4.5.3 Definitions

Operating Instruction – A command by operating personnel responsible for the Real-time operation of the interconnected Bulk Electric System to change or preserve the state, status, output, or input of an Element of the Bulk Electric System or Facility of the Bulk Electric System.

Note:
A discussion of general information and of potential options or alternatives to resolve Bulk Electric System operating concerns is not a command and is not considered an Operating Instruction.

Note:
Examples of Operating Instructions (not all-inclusive):

- Ordering transmission equipment in or out of service
- Load shed instructions
- Ordering generation MW/MVAR output changes
- Ordering generation online or offline (either in real time or scheduled in advance)

Note:
Examples of communications not considered Operating Instructions (not all-inclusive):

- Confirmation of ratings or power flows
- Discussions of operational options
- Discussions of generator status or availability

Three Part Communication – Verbal communication process between an issuer and receiver whereby:

1. Issuer clearly delivers the message
2. Receiver repeats (not necessarily verbatim) the message OR
   a. requests the issuer to reissue the message
3. Issuer confirms the receiver's response if the repeated message was correct OR
   a. reissues the message if the repeated information was incorrect or if requested by the receiver OR
   b. takes an alternative action if a response is not received or if the message was not understood by the receiver.

Note:
It is the issuer's responsibility to ensure the key components of the message were repeated correctly.

All-Call – Verbal message delivered to PJM members via a one-way single party to multiple parties burst messaging system.

Emergency – NERC Reliability Standard COM-002 requires that RC, BA and TOP communications utilize three-part communication when issuing or receiving Operating Instructions. In addition, the Standard has a 'zero tolerance' for failures to utilize three-part communication during an Emergency. The term Emergency as used in this section is applicable to the NERC terms "Emergency", "BES Emergency", "Capacity Emergency" and "Energy Emergency".

To distinguish between the two operating modes (normal vs Emergency) the following table has been developed to identify the criteria that define when an Emergency begins and ends on the PJM BES. If PJM or a Transmission Owner (TO) determines that the current system condition as listed in the "Point at which the Emergency Begins" column has been reached, PJM and the TO shall follow the communication requirements in the following steps until the conditions in the "Point at which the Emergency Ends" have been reached.

Point at which the Emergency Begins	Point at which the Emergency Ends
Any real-time (actual) IROL exceedance	Real-time IROL exceedance ended
Any real-time (actual) SOL exceedance above a facility's emergency thermal Transmission Facility Rating.	When the real-time SOL exceedance is below the emergency thermal Transmission Facility Rating.
Any real-time (actual) SOL exceedance below a facility's emergency low voltage Transmission Facility Rating.	When the real-time SOL exceedance is above the emergency low voltage Transmission Facility Rating.
PJM Manual 13, Section 2.3.2 'Capacity Emergencies': Steps 1 through 10	When all Capacity Emergency Procedure Steps (1-10) are cancelled
PJM Manual 13, Section 5.2 'Transmission Security Emergency Procedures': Steps 1 through 10	When all Capacity Emergency Procedure Steps (1-10) are cancelled
Load Shed Directive issued	Load Shed Directive has mitigated the emergency condition

4.5.4 Communication Protocols

System Operators must use the Communication Protocols for all Operating Instructions.

- All operators should use their last name (at a minimum) and company name when answering a phone call and identify themselves using their last name (at a minimum) and company when initiating a phone call.
- All operators shall issue and receive written and oral Operating Instructions using the English language.
- All operators shall issue and receive Operating Instructions using Three Part Communication (as defined above) during both normal and emergency operations.
    - If PJM or a PJM Member Transmission Owner (TO) determines that the current system condition as listed in the "Point at which the Emergency Begins" column (as defined above) has been reached, the compliance implications for not utilizing three-part communication are more severe (as applied in COM-002, R5) until the conditions in the "Point at which the Emergency Ends" have been reached.
- PJM shall confirm or verify that an Operating Instruction was received by at least one party when delivering the Operating Instruction via the All-Call system.

Note:
PJM Members can acknowledge receipt and understanding of All-Call messages by pressing two on the telephone keypad.

PJM operators can verify receipt of All-Call by recipients on the All-Call system and via an email report from the All-Call system.

Note:
When delivering All-Call messages, PJM operators will announce, their name (or position) and the type and number of messages at the start of the All-Call. The All-Call will be concluded with the operators name (or position) and “That is all”.

- For Operating Instructions that are issued with a time reference, the time identification shall be in 24 hour format. For Operating Instructions to entities in different time zones, the appropriate time zone shall be included (i.e. 17:00 EDT). Time identification is not required for Operating Instructions that are expected to be implemented immediately.
    - For Operating Instructions that reference transmission lines (including Transmission interface Elements and Transmission interface Facilities), the line identification shall include Terminal to Terminal designation, voltage level and line numbe r. When referencing other equipment at a substation in an Operating Instruction, the designation shall include substation name, equipment number and equipment type. Voltage level can be used as a clarifier if needed. When referencing a generating unit in an Operating Instruction, the designation shall include the generating station name and unit number.

Note:
Examples:

• Transmission Line: Bedington-Black Oak 500 kV 544 line

• Substation Equipment: Limerick 325 CB (500 kV)

- For Operating Instructions that reference alphanumeric information, phonetically correct alphanumeric clarifiers can be used, if needed, to minimize misinterpretation.
- Prior to taking actions to control transmission thermal or voltage constraints, PJM and TO operators must verify the validity of the problem by verifying the monitored element, the Transmission Facility Ratings, the actual flow or voltage and the contingency flow or voltage, as applicable.
- PJM members are obligated to follow all instructions as described in the PJM Operating Agreement, NERC Standards and PJM Manuals. If a PJM member is unable to comply with a PJM Operating Instruction, the member should notify PJM of the restriction (based

on safety, loss of life, damage to equipment, or regulatory or statutory requirements) so PJM is able to implement other actions to alleviate the operational problems.

- Refer to Manual 13: Emergency Operations, Section 5 for communications of long lead unit commitments.

4.5.5 Communications Protocols Training Requirements

All operators listed in Section 4.5.2 are required to complete initial training on these Communication Protocols and Definitions prior to issuing and/or receiving Operating Instructions. PJM will make this training available through the PJM LMS and track operator completion of this required training. Member company training liaisons will also ensure completion of this training by the required operators.

4.5.6 Communication Protocol Assessment

Each entity listed in Section 4.5.2 shall assess adherence to these Communication Protocols following the process below.

- This assessment of the individual operators will:
  - Evaluate each of an entity's operators/dispatchers adherence to the Communication Protocols outlined in Section 4.5.4 at least once every 12 months.
  - Provide feedback to each operator based on the results of this assessment.
  - Take corrective actions, as deemed necessary by the entity, to address deviations from the documented protocols.
  - These corrective actions could include performance coaching, additional training or other methods determined by the entity as effective in correcting the identified deficiency.

Note:
If the assessment reveals that these protocols were not used in an emergency, it may constitute a violation of COM-002 R5, R6 or R7.

- PJM will utilize the System Operations Subcommittee to assess the effectiveness of these Communication Protocols at least once every 12 calendar months.
- The assessment of the Communication Protocols will:
  - Evaluate any operating errors or events that involved communication errors or misunderstandings
  - Evaluate the effectiveness and efficiency of operator communications utilizing the Communication Protocols.
  - Evaluate whether or not any modifications to the Communication Protocols are required (while ensuring continued compliance with COM-002).

Section 5: Metering System Requirements

Welcome to the *Metering Requirements* section of the PJM Manual for Control Center and Data Exchange Requirements. In this section, you will find the following information:

- A general description of the different types of meters in use in PJM and the purpose of having metering requirements (see Section 5.1)
- The requirements for the different types of metering systems (see Sections 5.2 and 5.3).

5.1 Purpose & Criteria

The purpose of these PJM metering requirements is to ensure all electricity metering systems are installed, operated and maintained to provide PJM with system control and monitoring data and an accurate record of the energy quantities supplied to and received by all market parties. Each PJM Member is responsible for properly maintaining its metering systems. This section provides the minimum requirements for metering data - MW, MVAR, kV, AMP (for Geomagnetic Induced Currents), HZ, and MWH values - when communicating information to PJM.

The minimum requirements specified in this section do not supersede more restrictive agreements. In cases in which requirements or standards differ, the most restrictive criteria takes precedence. More specific requirements or standards may be required by local, state, or federal regulations, host utilities, service providers, or as are mutually agreed upon between parties.

This section is not comprehensive in regards to where metering and telemetry is required. Some subsections, such as Section 5.2.1.1, dictates minimum required metering placement and location. However other governing documents - for example Interconnection Agreements, standards, or other PJM Manuals - may also require metering at specific locations or for specific criteria. In those cases the metering system performance requirements are still here in Section 5.

Refer to Manual 11: Energy & Ancillary Services Market Operations, Section 10 for metering requirements specific to Demand Resources.

Refer to Manual 14D: Generator Operational Requirements for related telemetry and measurement requirements for generators.

5.1.1 Applicability by Date

The applicability of Section 5 depends on the installation date of the equipment in question and the start date of each requirement.

The effective date is December 1st, 1997, or alternately the date of integration into PJM for companies that integrated after December 1st 1997, for the following requirements:

- 5.2 System Control and Monitoring, External Tie Lines, MW and MVAR req.
- 5.2 System Control and Monitoring, Area Regulation, MW and MVAR req.
- 5.2 System Control and Monitoring, Generation Dispatch, MW and MVAR req.
- 5.2 System Control and Monitoring, Generation Reserve, MW and MVAR req.
- 5.2 System Control and Monitoring, System Restoration, MW and MVAR req.
- 5.3 Billing (Accumulator Data)

The effective date is January 1st, 2017 for the following requirements:

- 5.2.6 General Telemetry, MW and MVAR req.
- 5.2 System Control and Monitoring, All kV requirements except for 5.2 External Tie Lines
- 5.2.1 System Control and Monitoring, all Tie Line Primary Meter telemetry requirements for “dual port” meters that are required to telemeter directly to two entities (note that due to NERC BAL-005 requirements, for any External Tie Line both BAs must still have access to system control & monitoring data from the primary meter, regardless of the telemetry path)
- 5.2.1.3 System Control and Monitoring, Control Zone Ties, the Scan frequency requirement for any Tie Lines less than 100 kV

Metering systems that are grandfathered because the installation date precedes the effective date of the requirement can still be investigated and possibly redressed according to Section 5.2.8.

Replacing, upgrading or modifying existing grandfathered metering systems may cause the installation date to be reset and the system to be no longer grandfathered. This includes any work that substantially changes the system or individual components of the system to an extent that re-design or new design already being performed creates a reasonable opportunity to bring the system into compliance with the latest requirements. Examples of substantial modification include replacement of CTs, PTs, or IEDs, or similar related work. It is recognized that replacement of individual components with existing stocks of in-kind spare parts or stocks of newer but functionally similar parts may not be a reasonable opportunity to bring the whole system up to the latest performance requirements. Other architectural limitations such as physical space limits may also preclude a reasonable way to bring the overall system up to these performance requirements. In these cases the equipment may remain grandfathered as long as those limiting conditions prevail.

5.1.2 Applicability by Equipment

In Section 5, the word “metering” means any system of components that measures something relevant to electric power – MW, MVAR, kV, AMP (for Geomagnetic Induced Currents), HZ, and MWH values – and is the source of that measurement for PJM. This may include devices that are technically considered an actual electrical meter, which satisfy ANSI standards for meters,

or furthermore a revenue grade meter which tend to meet the highest accuracy thresholds. This may also include devices that are *not* typically considered an electrical meter, such as protective relays or transducers, which by design and function will often have lower accuracy than an actual meter; this is sometimes referred to as “operational metering”. The requirements described in Section 5 either apply or do not apply to any given system of devices or components based on the provided criteria and definitions of the data the device or system provides, regardless of what the actual devices or components are.

It is intended that all measurements being provided to PJM fall into at least one category in Section 5 for clear and explicit requirements. In the case a metering system falls into more than one category, the more restrictive requirements apply. If a measurement provided to PJM does not clearly fall into any category, the equipment owner should contact PJM for clarification.

In general, the Section 5 requirements apply to generation and transmission, not distribution. However voltage level is not a full proof indicator of applicability for transmission and distribution owners. All equipment at a Designated Facility or PJM OAT Tariff Facility or a facility otherwise participating in any PJM market (ex. generation facility in capacity market) must comply with these requirements. A list of transmission facilities, including a flag for PJM OAT Tariff Facility status, is available on Transmission Facilities page.

5.1.3 Accuracy Determination

Accuracy is one of the fundamental requirements of metering. Accuracy is expressed in this section as a percentage to be interpreted as the maximum acceptable percent greater than or less than true value.

Because any metering system may be composed of many components and subcomponents that themselves have their own accuracy ratings and performance characteristics that contribute to the accuracy of the system, these requirements affect all components of the system. The metering system to which these requirements apply includes everything from first analog measurement to first digitization of the measurement, at which point it is expected that no further loss of accuracy will occur downstream.

Metering system performance is a complex metric with many factors, making consistent calculation and determination difficult across all systems. For this reason the accuracy requirement applicable to a metering system may be met by satisfying at least one of any three methodologies:

- Calculate Using Nameplate Accuracy:
  - The nameplate accuracy of all components is calculated into the expected system accuracy by taking the square root of the sum of all inaccuracy percentages squared.

$$Total\ System\ Error = \sqrt{\left(CompError_1^2 + CompError_2^2 + \ \ldots\ \right)}$$

- Calculate Using Designed and As-built Loads:

  - Using the same calculation as above, but the error derives not just from simple nameplate rating for error, but the calculated error of each component for a certain loading point consistent with owning company's design philosophy.
  - The calculated error should take into account important design elements such as the CT turns ratio and burden. It is expected that the design loading point would fall within a range of 70% to 130% of nominal system conditions, where nominal system conditions are derived either from the nameplate rating of the equipment or the thermal load limit for the related equipment as submitted to PJM operations.
  - Companies may request review and approval from PJM for loading points not falling within 70% to 130%.

- Test:
  - Using a qualified tester to field test actual equipment or otherwise physically verify performance to ascertain the overall system error with reasonable confidence. Tester should be able to provide official test results including methodology and measurements.

5.1.4 Preference for Best Available Accuracy

The efficiency, reliability and fairness of PJM operations and markets for all members and customers are impacted by the accuracy of the metering covered in Section 5. Wherever possible, the most accurate metering available should be telemetered to PJM. This is especially true for Tie Lines or other points of large energy transaction, where the real-time telemetry data is often used to verify revenue grade billing data.

5.1.5 Metering and Telemetry

Telemetry is the measuring and transmission of data across and between diverse companies' systems and networks. The metering system requirements in this section often have relation to telemetry requirements, which are also captured in Manual 14D: Generator Operational Requirements for generation.

The scan frequency requirements presented here are to ensure the rate at which PJM can poll the serving entity for the data. However, if the upstream system has any link scans at a slower rate than the final PJM polling rate, then there is no benefit of PJM scanning at a faster rate. For example if a meter only measures a real time value at once every 10 seconds, there is no benefit for PJM to scan that value at once every 4 seconds. Therefore it is preferred that the telemetry system between the meter and PJM not present any measurement or scan rate limitations that would reduce the actual rate of update to PJM.

Precision is how exact a value is. Data value precision is often described by how many decimal places are provided for a given value. The telemetry system between the metering system and PJM should not at any point reduce data precision to a degree that would effectively reduce the

accuracy of the telemetered values received by PJM. Telemetry precision requirements for generation are further detailed in Manual 14D: Generator Operational Requirements.

Latency is not directly addressed in PJM Manuals as a requirement as of the publication of this manual revision. However it is preferred and beneficial that data latency, the time between measurement and PJM receipt of data, be kept as low as reasonably possible.

5.1.6 Types of Metering Systems

There are two major types of metering systems defined in this section, characterized by use and data type.

1. **System Control and Monitoring (Instantaneous data):** PJM dispatch utilizes data from these metering systems to continuously match generation with demand and to assure system security. An important subtype of System Control and Monitoring metering is System Control (Balancing) metering installed on internal or external Tie Lines.
    a. Requirements for System Control and Monitoring are specified in Section 5.2.
2. **Billing (Accumulator data):** PJM utilizes data from these meters to settle transactions between market participants. Billing meters are often referred to as being “revenue grade”, would typically provide “interval data”, and often measure energy at the Point of Interconnection (POI) between two parties.
    a. Requirements for Billing Metering and meter data are specified in Section 5.3.

5.2 System Control and Monitoring (Instantaneous data)

There are six classes of system control and monitoring data:

- Tie Lines
- Area Regulation
- Generation Dispatch
- Generation Reserve
- System Restoration
- General Telemetry

For each class of System Control and Monitoring data the metering system accuracy and periodicity of data transmission is specified in each section.

5.2.1 Tie Lines

PJM defines a Tie Line as a physical circuit or dynamic transfer, connecting two balancing authority areas, control areas, or fully metered electric system regions. The “fully metered” distinction refers to an electric system region having the capability to report hourly revenue energy flows for all its boundary ties, as well as the hourly revenue net output of all the generators within the region to PJM via Power Meter. Accurate modeling and data acquisition

for Tie Lines are particularly significant due to their impact on Automatic Generation Control (AGC) parameter calculations, network model connectivity, and market settlements.

Tie Lines have special telemetry and network requirements related to exchange of data over a network appropriately matched to the operational importance of the asset. These requirements are in regard to the actual final connection to PJM and do not regard any aspect of telemetry further upstream to the target facility, though it is preferred that the entire path of the data be similarly regarded for reliability and uptime. Often the PJM network for a Tie Line or Dynamic Transfer will already be in place for an ICCP link and sufficient for use, but for new circuits these criteria will apply. This table of network requirements is complimentary with the Telemetry requirements detailed elsewhere in Section 5.2.1.

Tie Line Voltage or Power	***Allowed Networks (supported data protocols)***
Tie Line ≥ 69kV Dynamic Transfer ≥ 100 MW	Redundant PJMnet (ICCP or DNP)
Dynamic Transfer < 100 MW and ≥ 10 MW	Redundant PJMnet (ICCP or DNP) Non-redundant PJMnet (ICCP or DNP)
Tie Line < 69kV Dynamic Transfer < 10 MW	Redundant PJMnet (ICCP or DNP) Non-redundant PJMnet (ICCP or DNP) Internet (DNP)

There are 4 main categories of Tie Lines recognized by PJM for varying operational and settlements purposes - External Tie Lines, Dynamic Transfers, Internal Tie Lines and Special Cases, each of which will be defined in this section. Dynamic Transfers are not strictly Tie Lines in the physical sense, but have many overlapping operational and market considerations, and so are categorized as a Tie Line in this section.

For all Tie Lines the Primary Meter is the meter on the primary side of the Tie Line. The Backup Meter is on the same side of the Tie Line as the Primary Meter. The Secondary Meter is on the side of the Tie Line opposite the Primary Meter. PJM requirements for a “backup/secondary” meter can be satisfied with either a Backup Meter or Secondary Meter.

Any Tie Line as defined in this section is considered a Tie Line even if the line is below typical BES voltage levels (≥ 100kV). Refer to Section 5.1.1 for related details.

Note:
The TO is required to submit new Tie Line requests before the 1st of the month prior to the month of the requested Tie Line being energized at the PJM SOS meeting. The request should identify the primary side metering point and expected date the line is to be energized.

All required telemetry shall be available 2 weeks in advance of the Tie Line being energized.

All Tie Line ICCP Object ID changes shall be communicated to PJM two weeks in advance of change.

These requirements apply to all types of Tie Lines (External Tie Lines, Dynamic Transfers, Internal Tie Lines and Special Cases) described in this section.

Note:
Metering issues or outages impacting accuracy of available telemetry should be brought to PJM's attention by the TO or GO owning the metering along with an estimate on when the issues will be resolved.

Note:
Tie Line Primary Meters that telemeter to more than one party are often referred to as "dual ported". Prevailing NERC CIP standards may or may not make dual porting a meter difficult or impossible, depending on each individual interpretation of the standards and circumstance. Notify PJM of exceptions taken to Tie Line Primary Meter requirements if it is interpreted they conflict with NERC CIP standards for mutual review and documentation.

5.2.1.1 External Tie Lines

External Tie Lines are circuits that connect the PJM Balancing Authority area with an external Balancing Authority area. They are a direct input into the Actual Net Interchange (NI_A) component of the PJM ACE equation. This is to align PJM tie line category with the NERC definition of Tie Lines (as set forth within the NERC Glossary of Terms) to which all related NERC Standards requirements are applicable.

External Tie Line Requirements

A primary meter and a backup or secondary meter is required**.**

Meter	Accuracy	Scan Frequency	Telemetry
Primary	+/- 2%	4 sec. or less between scans	Primary meter telemeters to both TOs at each end of the line. Both TOs telemeter

Meter	Accuracy	Scan Frequency	Telemetry
			to their respective BA. BAs telemeter to each other.
Backup /Secondary	+/- 5%	4 sec. or less between scans	Backup/Secondary meter telemeters to the secondary end TO. TO telemeters to the secondary end BA. The BA telemeters to the primary end BA.

Note:
See Attachment D: Exhibit 1 & 2 for example.

External Tie Lines have additional NERC BAL requirements. The NERC accuracy guideline results in an overall metering accuracy better than 2% and satisfies the NERC BAL standard.

Primary Transducer	Accuracy Guideline
Frequency Transducers	0.001 Hz
Potential Transformers	0.30% of Full Scale
Current Transformers	0.50% of Full Scale
MW/MVAR/Voltage Transducers	0.25% of Full Scale
Remote Terminal Units (A/D)	0.25% of Full Scale

Exhibit 1: Primary Transducer Accuracy Guidelines

Note:
NERC Frequency Transducer requirements apply only to the PJM Time Error devices in the PJM Control Center. The requirements do not apply to telemetered frequency measurements provided to PJM. However, PJM still receives and references frequency telemetry from members. The highest accuracy frequency available is requested.

5.2.1.2 Dynamic Transfers

Dynamic Transfers (Pseudo-Ties and Dynamic Schedules) are special cases of energy transfers between the PJM balancing authority area and an external balancing authority area. They are virtual External Tie Lines defined in Manual 12: Balancing Operations, Attachment F and are referenced in this Tie Line section due to their comparable impact on the PJM Area Control Error (ACE) equation.

Pseudo-ties are included in the Actual Net Interchange component (NI_A) of the PJM ACE equation in the same manner as an External Tie Line, while Dynamic Schedules are included in the Scheduled Net Interchange component (NI_S) in the same manner as an Interchange Schedule.

Note:
For PJM Members, any Dynamic Transfer over 10 MW uses PJMnet for telemetry. See Manual 14D: Generator Operational Requirements for more information about PJMnet. PJM must be notified as soon as possible of new Dynamic Transfers and PJM will determine if the time line is achievable.

Pseudo-Tie and Dynamic Schedule Requirements

A primary meter is required.

Meter	Accuracy	Scan Freq.	Telemetry
Primary	+/- 2%	4 sec. or less between scans(2 sec. preferred)	One primary meter is at each Point of Interconnection. Each primary meter telemeters to the owning MOC/TO. The MOC/TO telemeters to PJM and the native BA.

Note:
See Attachment D: Exhibit 3 for example.

5.2.1.3 Internal Tie Lines

These Tie Lines connect zones or systems within the PJM Balancing Authority Control Area. They do not directly affect the PJM ACE equation, and are more significant for internal PJM modeling, AGC operational parameter calculations, and market settlements.

Internal Tie Lines Include:

- Control Zone Tie Lines
- Transmission Zone Tie Lines
- Fully Metered EDC Tie Lines
- East EHV Tie Lines

Control Zone Tie Lines

This can be defined as a circuit connecting two Control Zones within the PJM RTO. PJM defines a Control Zone as a subset of a control area that has a separate regulation and spinning reserve requirement based on NERC criteria. The currently defined PJM Control Zones are:

- MAD (PJM Mid-Atlantic)
- APS (FE South)
- ATSI (FE West)
- AEP (American Electric Power)
- DOM (Dominion, Virginia Electric and Power Company)
- DEOK (Duke Energy Ohio Kentucky)
- EKPC (East Kentucky Power Cooperative)
- ComEd (Commonwealth Edison Company)
- Dayton (Dayton Power and Light Company)
- DLCO (DUQ, Duquesne Lighting Company)

It is at this level of granularity, from one station within Control Zone A to another station within Control Zone B, that Internal Ties are defined for PJM AGC Tie Line monitoring. Control Zone Tie Lines are significant for PJM AGC calculations, as they are used to determine Control Zone Loads & Generation Transfers, which in turn serve as inputs into PJM Load Forecast applications.

Control Zone Tie Line Requirements

A primary meter and backup or secondary meter is required.

Meter	Accuracy	Scan Freq.	Telemetry
Primary	+/- 2%	4 sec. or less between scans(2 sec. preferred)	The primary meter telemeters to the primary end TO. Primary end TO telemeters to PJM.
Backup /Secondary	+/- 5%	4 sec. or less between scans(2 sec. preferred)	The backup/secondary meter telemeters to the secondary end TO. Secondary end TO telemeters to PJM.

Note:
See Attachment D: Exhibit 4 for example.

It is optional but preferred that the primary meter also telemeter to the secondary end TO and the secondary end TO telemeters to PJM.

Transmission Zone Tie Lines

This can be defined as a circuit connecting two Transmission Zones within the PJM RTO. PJM Control Zones are also Transmission Zones, with the exception of the PJM Mid-Atlantic Control Zone, which is subdivided into the following Transmission Zones:

- AEC (Atlantic City Electric Company)
- BG&E (Baltimore Gas and Electric Company)
- DPL (Delmarva Power and Light Company)
- JCPL (Jersey Central Power and Light Company)
- ME (Metropolitan Edison Company)
- PE (PECO)
- PN (PENELEC, Pennsylvania Electric Company)
- PPL (PPL Electric Utilities Company)
- PEPCO (Potomac Electric Power Company)
- PSE&G (Public Service Electric and Gas Company)
- RECO (Rockland Electric)
- UGI (UGI Utilities Inc.)

Other special assets are sometimes treated like a Transmission Zone, such as generation facilities or DC to DC converters that own and operate their own transmission facilities. These facilities also must follow these Transmission Zone metering system requirements.

Therefore, all Control Zone Tie Lines are Transmission Zone Tie Lines, although the reverse is not always true. Transmission Zone Tie Lines are significant for state estimation of transmission zone loads and load busses in the PJM EMS model, transmission zone load forecasts, and zonal load settlement calculations.

Note:
The term “Transmission Zone” is not strictly defined in any PJM Manual or Agreement. However, a Transmission Zone can be loosely defined as a zone encompassing all the facilities owned by a recognized PJM Transmission Owner. A Transmission Owner is defined in the PJM OATT as “Each entity that owns or leases or otherwise has possessory interest in facilities of electric energy in interstate commerce under the Tariff.”

Fully Metered EDC Tie Lines

This can be described as a Tie Line connecting two fully metered Electric Distribution Companies (EDCs) within PJM. For purposes of this manual, an EDC is defined as “a PJM Member that owns or leases with rights equivalent to ownership electric distribution facilities that are used to provide electric distribution service to electric load within the Control Area”. Most

Transmission Zones are also fully metered EDC service territories, with some exceptions where the Transmission Zone is split into two or more sub-regions which are each identified as an EDC. It is at this lowest level of granularity, from one station within an EDC to another station within a different EDC, that PowerMeter ties are defined. Fully metered EDC Tie Lines are significant for state estimation of transmission zone loads and load busses in the PJM EMS model, transmission zone load forecasts, and zonal load settlement calculations.

Note:
The term "fully metered EDC" is also used in Manual 28: Operating Agreement Accounting. Consistent with all other descriptions of categories of metering systems in Section 5 of this manual, this description is not intended for use in approving or determining the validity of fully metered EDCs.

East EHV Tie Line

Specifically for the PJM Mid-Atlantic region, the East EHV (Extra-High Voltage) Tie Line is also recognized. This can be defined as a tie connecting the PJM East EHV 500 kV network with the remaining bulk electric system. It exists as a result of the joint ownership by multiple PJM Transmission Owners of the PJM East 500 kV network. For settlements purposes, East EHV Tie Lines are defined in order to facilitate PJM's East EHV loss calculations, and transmission zonal load settlements.

Transmission Zone, Fully-Metered EDC, East EHV Tie Line Requirements

A primary meter is required.

Meter	Accuracy	Scan Freq.	Telemetry
Primary	+/- 2%	10 sec. or less between scans	The primary meter telemeters to the owning TO and other end TO. Both TOs telemeter to PJM.

If for any reason it is not possible or preferred to "dual port" the primary meter such that two separate parties independently receive data, then the following alternative conditions including two "single port" meters can be met to satisfy PJM requirements.

Meter	Accuracy	Scan Freq.	Telemetry
Primary	+/- 2%	10 sec. or less between scans	The primary meter telemeters to the primary end TO. Primary end TO telemeters to PJM.
Backup /Secondary	+/- 5%	10 sec. or less between scans	The backup/secondary meter telemeters to the secondary end TO.

Meter	Accuracy	Scan Freq.	Telemetry
			Secondary end TO telemeters to PJM.

5.2.1.4 Special Cases and Transformer Ties

Any ties that are actually a transformer and not a transmission line are considered a Transformer Tie. Transformer Ties may be external or internal depending on their use.

Specials Cases and Transformer Ties Requirements

A primary meter is required.

Meter	Accuracy	Scan Freq.	Telemetry
Primary	+/- 2%	10 sec. or less between scans(2 sec. preferred)	The meter telemeters to the owning TO/ BA and other end TO/BA. Both TOs or the other BA telemeter to PJM.

Note:
See Attachment D: Exhibit 5 for example.

If for any reason it is not possible or preferred to “dual port” the primary meter such that two separate parties independently receive data, then the following alternative conditions including two “single port” meters can be met to satisfy PJM requirements**.**

Meter	Accuracy	Scan Freq.	Telemetry
Primary	+/- 2%	10 sec. or less between scans	The primary meter telemeters to the primary end TO/BA. Primary end TO or other BA telemeters to PJM.
Backup /Secondary	+/- 5%	10 sec. or less between scans	The backup/secondary meter telemeters to the secondary end TO/ BA. Secondary end TO or other BA telemeters to PJM.

A transformer tie often has unique topography requiring special considerations for metering and telemetry. For example actual measurement of secondary side flows may require and have more than one secondary meter and measurement location.

If actual measurement of secondary side flows is not possible or practical, it is optional but preferred that the meter readings also be used to calculate the secondary side measurements, and the calculated secondary side measurements be telemetered to PJM by one or both TOs.

Other special cases should be individually reviewed with PJM.

5.2.2 Area Regulation

Area regulation data is required to ensure that the instantaneous mismatches of load and generation are corrected by sending a generation control signal to those plants/stations/PJM Members scheduled to provide this ancillary service. PJM calculates the desired area regulation signal, and the signal is transmitted to the designated provider of this service. Regulating assets provide telemetry to PJM for real time operations and asset performance calculation.

The requirements for Area Regulation metering systems are:

- Metering Accuracy: Within ±2% of true value.
- Scan Frequency: 4 sec. or less between scans

Note:
PJM Members must have the ability to receive a regulation signal. If Automatic Generation Control (AGC) becomes inoperative, the PJM Members must have the ability to adjust generation manually to maintain scheduled interchange.

5.2.3 Generation Dispatch Data

For PJM dispatchable generation, the appropriate operating data points will be provided to PJM either through an EMS data link or through the Markets Gateway interface whenever the data changes.

The plant/station/PJM Member with generation provides PJM with all necessary information to dispatch individual units. The plant/station/PJM Member will notify PJM of any actual or potential changes in unit status or capacity.

For self-scheduled generation, the self-scheduled value is transmitted twenty minutes prior to any changes.

PJM uses its Security Constrained Economic Dispatch (SCED) to determine the appropriate generation output. An individual unit MW base point is sent to each plant/station/PJM Member as the dispatch signal.

The requirements for Generation Dispatch Data metering systems are:

- Metering Accuracy: Within ±2% of true value.
- Scan Frequency: 10 sec. or less between scans

5.2.4 Generation Reserve

The availability of Generation Reserve is transmitted to PJM from the individual plant/station/ PJM Member. This data is used to determine the reliability of the PJM RTO.

The requirements for Generation Reserve metering systems are:

- Metering Accuracy: Within ±2% of true value.
- Scan Frequency: 10 sec. or less between scans

5.2.5 System Restoration

System Restoration data is required to facilitate system restoration (see Manual 36: System Restoration). Specifically, a system frequency measurement is required to be transmitted to PJM from each Transmission Zone.

The requirements for System Restoration metering systems are:

- Metering Accuracy: Within ±2% of true value.
- Scan Frequency: 4 sec. or less between scans

5.2.6 General Telemetry

PJM receives real-time telemetry for many measurements that do not fall into any of the preceding categories in Section 5.2. These measurements may be related to transmission facility telemetry requirements for observability in Manual 03: Transmission Operations and Manual 03A: Energy Management System Model Updates and Quality Assurance, or related to the Interconnection Agreement for a particular facility, or any other operation or market reason to telemeter data to PJM.

The requirements for General Telemetry metering systems are:

- Metering Accuracy: Within ±5% of true value.
- Scan Frequency: 10 sec. or less between scans

5.2.7 System Control and Monitoring Metering Maintenance

Equipment owners shall develop, maintain and execute their own testing, calibration and maintenance policies and procedures for all metering systems, including systems with devices other than actual meters that provide PJM with system control and monitoring real-time data. All metering systems that provide PJM with system control and monitoring real-time data should be covered by either a periodic test plan, where all equipment is tested at some set time interval, or exception-based maintenance, where equipment testing is triggered based on some continuous or periodic method to identify probable out of spec performance. A typical example of exception-based maintenance method would be to monitor the delta between a measured value and a state estimated value at the same point, where a high delta could indicate inaccurate telemetry and would be further investigated for potential mitigation action, like equipment testing, calibration and maintenance.

NERC standard PRC-005-6 includes maximum maintenance intervals and maintenance activity for protection systems. Where PJM is receiving system control and monitoring real-time data from equipment associated with protection systems that fall under NERC Standard PRC-005, it is recommended that the telemetry accuracy be tested and verified as part of the other required maintenance activities.

For measurement locations that are points of interchange and include a revenue meter that falls under PJM billing meter maintenance requirements, it is recommended that the real-time telemetry accuracy be derived from that same high-accuracy device and the real-time telemetry be tested and verified as part of the required billing meter maintenance.

5.2.8 Accuracy Investigations

PJM can request an investigation at specific locations based on actual or projected market and system conditions into the existing overall or component accuracy (and telemetry periodicity) at the identified sites.

PJM investigation requests will be based on and justified on demonstrable conditions such as:

- large discrepancies between real-time data and state estimator results
- large discrepancies between electrically close real-time data points
- areas of reliability concern due to equipment regularly running at thermal limits
- market concerns related to uplift costs that could be aggravated by low accuracy telemetry
- critical measurements for observability

PJM may periodically run applications to detect telemetry that is demonstrably likely to be out of compliance with an applicable PJM accuracy requirement. These programs should be overlapping and complimentary with any exception-based telemetry maintenance programs operated by equipment owners. For example, PJM may not have as much telemetry and modeling near distribution voltages, and accordingly an equipment owner with more modeling and telemetry may be able to perform a better accuracy check in those areas.

PJM will communicate the possible non-compliant telemetry to the equipment owner along with the priority of follow-up activity based on operational, market and reliability concerns.

PJM and the equipment owner will produce a mitigation plan that considers the specific situation, local topology, and costs to equipment owner. Mitigation plans may include deliverables and actions such as: lowering the State Estimator weighting, checking modeling, bringing additional available telemetry in the area online to PJM, testing or calibrating existing equipment, or equipment upgrade/replacement. PJM will review the proposed mitigation plan to ensure it address all concerns, such as reliability, market efficiency and market fairness, in a reasonable time frame. A reasonable deadline for the execution of the plan shall be agreed upon by all impacted parties.

PJM will document and store the conclusions of any significant investigations for historical and future guidance purposes.

5.2.9 Special Considerations and Requirements for Voltage and Amps

The PJM EMS primarily makes use of MW, MVAR and Voltage, as the real time data consumed to allow critical applications to run successfully. The metering accuracy requirements in Section 5.2, as previously mentioned, includes the entire metering system from measurement to first digitization.

Voltage in particular is an important class of measurements to PJM operations. Because voltage is one component of determining MW and MVAR, and because overall system error cannot be better than the worst error of any individual component, voltage data should meet (or beat) the same minimum requirements of metering accuracy as dictated by the rest of Section 5.2. Note that External Tie Lines, as detailed in Section 5.2.1.1, have additional NERC BAL derived requirements that apply directly to Potential Transformers, Transducers or RTUs that may be part of that associated metering system.

Amperage measurements are typically used for special Geomagnetic Induced Current (GIC) considerations at PJM. Accuracy and scan frequency will be mutually agreed upon between all involved parties.

5.3 Billing (Accumulator data)

In general billing metering systems are used for transactions with PJM. Billing metering systems may also function as Balancing Meters. Billing metering systems are capable of collecting and storing bi-directional data. This section provides the minimum standard requirements for the billing metering to be used in transactions with PJM. The standards apply to new meter installations, replacement meter installations, or upgrades to existing installations.

Reliable and compliant billing metering must be installed for any billed service, unless applicable alternative practices are specified here in Section 5. Meter data is automatically electronically communicated to PJM by the producer, host utility, or transmitter for timely accounting and billing. This enables PJM to account and bill for services and to identify and resolve erroneous meter data. Communication between PJM Members may utilize any mutually agreeable method, such as voice notification or paper document.

5.3.1 Collection Intervals and Units

Billing metering systems collect or accumulate watt-hours over a specified time interval. Common time intervals are fifteen minutes, thirty minutes, and sixty minutes. For some services billing meter data may be transmitted or submitted at a larger time interval than originally collected or accumulated as the metering system permits.

Billing metering systems provide watt-hour data, which is a measurement of transacted electric energy. The standard PJM engineering unit is a megawatt-hour (MWh), which data submissions to PJM should be scaled to. The minimum allowable data precision for submissions to PJM may be as small as a kilowatt-hour (kWh) depending on requirements by specific services, local or state regulations, host utilities, service providers, or as are mutually agreed upon by the parties involved.

5.3.2 Primary Billing Meter Accuracy

A “Primary” meter shall be established for each transaction location with PJM. The minimum metering accuracy for each measuring device is defined by prevailing ANSI standards. The standards in this attachment are a minimum requirement, and do not supersede more restrictive agreements. In cases in which standards differ, the most restrictive criteria take precedence.

The manufactured accuracy class of all energy interchange billing devices in the metering system should be accurate within ±0.3% of full scale.

The requirement for Primary Billing Metering System accuracy is:

- Metering Accuracy: Within ±1% of true value.

More restrictive standards may be required by local or state regulations, host utilities, service providers or as are mutually agreed upon by the parties involved.

Each metering point location used for billing is tested by the owner of the equipment at intervals of two years and its accuracy of registration maintained in accordance with good practice. At the request of any party, an individual metering point location will be tested, but, if an error of less than ±1.0% is observed, the requesting party will pay for the test. PJM is to be notified of the error for auditing purposes.

5.3.3 Backup Billing Meter Requirements

A “Backup” meter shall be established for each transaction location with PJM. A backup metering system shall be provided that is of sufficient accuracy to serve as a replacement for the primary metering system. The average of instantaneous values may be used as a backup source, provided mutually agreed upon accuracy is obtained and applicable standards are achieved.

The backup metering system is capable of collecting interchange data which can be logically compared to data from the primary meter system so that material differences may be detected in a reasonable time.

If any test of an individual metering system discloses an error of greater than 1.0%, the accounts of the parties shall be adjusted for no more than two months for which the inaccuracy is estimated to have occurred. Longer correction periods, if confirmed by recorded information or defined as a result of the dispute resolution process, may be mutually agreed upon by the parties involved. All errors of the above magnitude shall be reported to PJM and documented for

auditing purposes. See Manual 28: Operating Agreement Accounting, Section 12 for related details.

5.3.4 Maintenance

The accuracy of all billing meters, as required to transact energy services, shall be verified by tests conducted by the equipment owner once every two years. If such test identifies, or other indications show, a recording meter is out of service or inaccurate, the owner must take action to restore the meter to correct operation within 30 days or a date mutually agreed upon by all parties. In the interim, backup metering may be used as mutually agreed by the parties involved. If equipment installation or replacement is required to resolve the inaccuracy, all equipment must be correctly operating at a date mutually agreed upon by all parties. PJM shall be notified of the inaccuracy, interim procedures, and resolution for auditing purposes.

Periodic accuracy compliance testing may be requested by PJM member groups as required. Authentication of current meter testing and validation of newly installed or repaired meter systems may also be required.

The results of all accuracy testing shall be reported to PJM. As a minimum, PJM will document provided test results for all PJM Member metering tests that show errors of greater than 1% for auditing purposes.

5.3.5 Accuracy Checks and Retention

All manual or additional meter reading or comparisons required to ensure consistent valid meter information (“true-up”), are performed prior to the billing cycle, as mutually agreed upon by the parties involved. Current billing cycles are monthly.

All meter records and associated documentation is retained for a period of seven years for independent auditing purposes.

Any disputes involving any aspect of the billing metering standards or their application are resolved as described in Manual 33: Administrative Services for the PJM Operating Agreement.

5.3.6 Location of PJM Mid-Atlantic 500 kV Meter Points

Interchange billing metering is provided on the system as follows:

- *Through-Transmission Transformers*: EHV interchange metering points are provided from the secondary side of all through-transmission transformers connected to the 500 kV EHV system. For example, interchange metering is provided on the 230 kV side of a 500/230 kV through-transmission transformer.
- *Radially-Tapped Generators and Transformers*: Generators and transformers that are not through transmission (including unit station service transformers) and that are tapped directly on the 500 kV EHV system are provided with interchange metering on the primary side (500 kV) of the step-up, station service or radial transformer. For example, a generator connected to the EHV system has an interchange metering point on the 500 kV

side of the unit step-up transformer. All other generators and transformers not connected to the 500 kV system provide information as received from the high side or the low side of the unit transformer.

5.3.6.1 Measuring Point Compensation

PJM Member may elect to install a watt-hour metering system on the opposite side of the transformer than directed above (Section 5.3.6) provided that a compensation system is included to capture and adequately adjust interchange values to account for transformer losses. Any design for alternative metering approaches shall be documented and made known to PJM and all parties involved. Any alternative approach must be approved by PJM.

For through-transmission transformers, interchange values may be determined from the 500 kV side if compensation is installed which subtracts transformer losses when power is imported to the PJM Member or adds transformer losses for exported power.

For Generators and Transformers Radially Tapped, interchange values may be determined from the 230 kV side if compensation is installed which adds transformer losses when power is imported to the PJM Member or subtracts transformer losses for exported power.

5.3.7 Geographically Non-Contiguous Load

Any PJM Member serving a load which is geographically non-contiguous to its defined service area must meter the load or otherwise accurately and reliably account for the load using contractual agreements between the involved parties. Any metering and system conventions implemented in order to meter the load must be provided to PJM, and all other parties involved. Any alternative approach must be approved by PJM prior to implementation. This enables PJM to monitor and control the transmission system, to identify and resolve erroneous information, to account and bill for services and to take appropriate action for reliability concerns.

5.3.8 Generation Billing Metering

Any generation unit participating in the PJM Energy Market is required to have a metering system capable of recording generation net MWh output. When metering limitations require variance from this standard, the metering system must be mutually agreed upon by the parties involved.

All metered generator data values are to be supplied to the required parties in “net” form. “Net” or “net wholesale injection” is defined as “gross” output minus all unit station light and power components. When “net” measured values are not available due to metering system limitations, “gross” measured values may sometimes be used in conjunction with an approved “gross” to “net” calculation method. Any such use of a “gross” to “net” calculation must be approved by PJM.

5.3.9 Small Energy Billing Metering

The expense and practicality of reporting watt-hours for small energy transactions may not be cost effective or prudent. The average of instantaneous values can be used, provided that a mutually agreed upon accuracy is obtained and applicable standards are achieved.

Attachment A: Data Specification and Collection

As the Balancing Authority, Transmission Operator, and Reliability Coordinator, PJM has the responsibility to prevent instability, uncontrolled separation, or cascading outages that adversely impact reliability and fulfill its operational and planning responsibilities as outlined in NERC Reliability Standards IRO-010 and TOP-003[2]. PJM must ensure that PJM has all data required to monitor, assess, and perform Operational Planning Analyses of its region. This attachment lists the data PJM requires from PJM Members and external entities to conduct such analysis and operate the system reliably. This attachment constitutes the data specification as required by IRO-010 and TOP-003 and identifies the following:

1. The data required from each PJM Member type.
2. The method by which PJM or the PJM Member can access such data. PJM has access to each required data set through at least one of several standard channels, which PJM considers the mutually agreeable security protocol in each case. These standard channels include but are not limited to the following:
    a. eDART
    b. NERC SDX
    c. Markets Gateway
    d. Data Viewer
    e. Operational Data page on PJM website
    f. SCADA
    g. ICCP
    h. OASIS
    i. ExSchedule
    j. NERC tags
    k. Emails
    l. Phone conversations
    m. Modeling Software files (e.g., PROMOD files)
    n. Operational or planning studies or assessments
    o. Load forecasts or information
3. The mutually agreeable format and the channel through which PJM receives such data from each PJM Member Type (listed in the table below).

[2] IRO-010 R1 and TOP-003 R1, R2

PJM requires similar data from external entities as it does from PJM Members, such as neighboring Balancing Authorities, Transmission Operators, and Reliability Coordinators and receives such data through the channels mentioned above, and provides such data to these entities. The primary methods for exchanging this data are:

1. ICCP data via the EIDSN
2. NERC SDX data exchange
3. EMS model exchange[3]

Note:
Please reference PJM Manual -14D Generator Operational Requirements, Section: Fuel, Emissions and Operational Data Reporting for specific details on providing PJM seasonal operating limitation data per EOP-011, IRO-010, and TOP-003. Please reference M-13 Emergency Operations, Section: Cold Weather Advisory/Alert for providing operating limitations during local forecasted cold weather.

All needed external TOP, BA, GO, GOP, LSE, TO and DP data is available to PJM through neighboring RCs. These external entities may provide data to their respective Reliability Coordinator (RC), as specified by that entity, and PJM will obtain this information from neighboring RCs. This approach is consistent with TOP-003 R5, which does not require the data to be delivered directly to PJM. PJM specifies data requirements in JOAs with each neighboring RC:

1. PJM-MISO JOA, 4.1.2: Exchange of SCADA Data. PJM exchanges this information with MISO via a direct ICCP link, exchanging System Data Exchange (SDX) data, exchanging daily reports and participating in periodic conference calls.
2. PJM-TVA Joint Reliability Coordination Agreement (JRCA), 4.1.2: Exchange of SCADA Data. The PJM-TVA JRCA, Section 4.1.2.5 contains a list of the data that PJM and TVA have agreed to exchange including transmission and generation power flows, measured bus voltages and breaker equipment statuses for any requested facilities. PJM exchanges this information with TVA via a direct ICCP link.
3. PJM-NYISO JOA, 35.7.1: Exchange of Operating Data. While the JOA states that PJM and NYISO will share the respective data by posting on the OASIS, Data Confidentiality agreements and FERC orders that have changed over the years prevent the posting of much of this information. Therefore, as indicated in the JOA, these other agreements take precedence over the JOA. However, PJM shares this information with NYISO via other means.

[3] Approved organizations in confidential and secure data exchanges include but are not limited to: NYISO, MISO, TVA, IESO, Duke Energy Progress, Southern Company, ISO-NE, SPP, LGE/KU, American Transmission Company LLC, NIPSCO, ITC Holdings Corp (ITC Michigan & ITC Midwest), SERC Real-time Model Working Group members, EIDSN members, NPCC CP8 Working Group members.

4. PJM-VACAR RC Agreement, 4.3: Data Exchange and Exhibit C. The requirements detailed in this agreement ensure PJM receives adequate data from neighboring RCs, TOPs, and BAs.

In the event that a PJM Member or an external entity has a conflict[4] or cannot provide PJM the data or provide the data in the timeframe PJM needs to perform Operational Planning Analyses, Real-time monitoring, or Real-time Assessments as required in IRO-010 or TOP-003, PJM will work with the entity on a case by case basis to determine a mutually agreeable format and timeframe to ensure PJM has access to such data.

PJM will utilize the data available via ICCP/DNP links and Markets Gateway and will work directly with RCs, TOs, TOPs, GOs, GOPs and BAs to resolve any data conflicts. The mutually agreed upon process for resolving data conflicts will entail PJM working directly with entity to resolve the data conflict in the most efficient and appropriate manner for each specific case. Greater detail for telemetry-related data conflict resolution is provided in Section 3.8 of this manual. State Estimated or Contingency Analysis conflicts will be resolved as detailed in Manual 03: Transmission Operations, Section 1.3.

PJM follows Manual 34: PJM Stakeholder Process to ensure PJM Members are notified of any changes to this manual through PJM committees. PJM will distribute a copy of this manual to PJM Members by posting it to the PJM website where all PJM Manuals are publicly available. PJM will also distribute a copy of this manual to neighboring entities that have data required by PJM to perform Operational Planning Analyses, Real-time monitoring, or Real-time Assessments as required in IRO-010 or TOP-003.

PJM will respond to any data specifications PJM receives from external entities in a timeframe, format, and security protocol that is mutually agreeable and permissible within the data specification requirements of the external entities.

The following tables detail specific information services, entities that may take part in that information service, and criteria or conditions of that service. Required information services are only applicable if that service is being utilized. For example, B.1 is an information service for “CT Generator Availability Updates via Markets Gateway, eDART”, but applies only if the “PJM Member Generating Entity” has CTs.

[4] IRO-010 R3.2 and TOP-003 R5.2

A: Generation Scheduling Services							
	Information Services	Periodicity for providing data	PJM Member Regional Transmission Owner	PJM Member Generating Entity	PJM Member Load Serving Entity	PJM Member Marketer	Neighboring Control Areas
Inputs to PJM							
A.1	Hydro Constraint Information (pool scheduled resources) submitted by hydro plants via eDART	Hourly		2			
A.2.0	Generator Outage Information submitted via eDART	Per event		1			
A.2.1	Generator Outage Information submitted via SDX	Hourly					4
A.3	Generator Bids (cost, availability, etc.) via Markets Gateway	Daily		3			
A.4	Area Regulation Bids via Markets Gateway	Daily		7			

A: Generation Scheduling Services							
	Information Services	Periodicity for providing data	PJM Member Regional Transmission Owner	PJM Member Generating Entity	PJM Member Load Serving Entity	PJM Member Marketer	Neighboring Control Areas
A.5	Synchronized Reserve Bids via Markets Gateway	Daily		3			
Outputs from PJM							
A.6	Hydro Schedules (hourly generation and capacity) [read only] via eDART	Hourly		2			
A.7	Hydro Schedule Updates via eDART	Hourly		2			
A.8	Managers Report on Joint Owned Units [reported to joint plant owners]	Per request		5			
A.9	Load Forecasts (peak loads, congestion) via Data Viewer,	Sub-hourly	O		O	O	O

A: Generation Scheduling Services							
	Information Services	Periodicity for providing data	PJM Member Regional Transmission Owner	PJM Member Generating Entity	PJM Member Load Serving Entity	PJM Member Marketer	Neighboring Control Areas
	Operational Data page on pjm.com						
A.10	Reliability Information (Forecasted Load via Data Viewer, Minimum Generation Problems, Outages, Available Capacity) via eDART and Emergency Procedures	Per event as required	O				X
A.11	Generator Bid Confirmations (cost, availability, etc.) via Markets Gateway	Daily		2			
A.12	Selected Generators (next day schedule)[distributed to selected generator owners] via Markets Gateway	Daily		2			

A: Generation Scheduling Services							
	Information Services	Periodicity for providing data	PJM Member Regional Transmission Owner	PJM Member Generating Entity	PJM Member Load Serving Entity	PJM Member Marketer	Neighboring Control Areas
A.13	System restoration planning data (e.g. unit start times, ramp rates, start-up loads, low load operating capabilities)	Per event as required		8			

Key:
X – Required Service
O – Optional Service
1 – Mandatory For All Generation Within the PJM RTO
2 – Mandatory For Unit Specific Generation Bidding
3 – Mandatory For All Capacity Resources
4 – System Reliability Information Only
5 – Mandatory For Joint-Owned Unit Owners
6 – Mandatory If Not Attainable From Existing Telemetry
7 – Mandatory For Generators Offering Regulation
8 – Mandatory data to be shared with Transmission Owners for Generators that are, or will be, included in the TO restoration plan

Exhibit 2: Generation Scheduling Services

B: EMS Services							
	Information Services	Periodicity for providing data	PJM Member Regional Transmission Owner	PJM Member Generating Entity	PJM Member Load Serving Entity	PJM Member Marketer	Neighboring Control Areas
Inputs to PJM							
B.1	CT Generator Availability Updates via Markets Gateway, eDART	Hourly or per event		1			
B.2	Confirmed Regulation MWs via Markets Gateway	Hourly or per event		7			
B.3	Real-time Telemetry Status & Analog Data via SCADA or ICCP	See subsections below	X	X	6		4
B.3.1	MW on BES Facilities	2-10 seconds or per EMS scan	X	X			
B.3.2	MVAR on BES Facilities	2-10 seconds or per EMS scan	X	X			
B.3.3	Voltages on BES Facilities	2-10 seconds or per EMS scan	X	O			

B: EMS Services							
	Information Services	Periodicity for providing data	PJM Member Regional Transmission Owner	PJM Member Generating Entity	PJM Member Load Serving Entity	PJM Member Marketer	Neighboring Control Areas
B.3.4	Tap Position on BES Transformers	2-10 seconds or per EMS scan	X				
B.3.5	Frequency	2-10 seconds or per EMS scan	X	O			
B.3.6	Status of BES Circuit Breakers	Per status change or per integrity scan	X	6			
B.3.7	Phase Shifter Tap Position (if in Zone)	2-10 seconds or per EMS scan	X				
B.3.8	Static VAR Compensator status (if in zone)	Per status change or per integrity scan	X				
B.3.9	Status of some BES Disconnects	Per status change or per integrity scan	O				
B.3.10	Temperatures	2-10 seconds or per EMS scan	O				

B: EMS Services							
	Information Services	Periodicity for providing data	PJM Member Regional Transmission Owner	PJM Member Generating Entity	PJM Member Load Serving Entity	PJM Member Marketer	Neighboring Control Areas
B.4	AVR and PSS Excitation Control via eDart or SCADA	Per status change via eDART or per EMS scan via SCADA		1			
B.5	Failures and unplanned outages of Protection Systems via eDART or other communication methods	Per event	X	X			
B.6	State of Charge via SCADA, ICCP	2-10 seconds or per EMS scan		8			
Outputs from PJM							
B.7	CT On/Off Times for PJM Units Only	Per event		1			

B: EMS Services							
	Information Services	Periodicity for providing data	PJM Member Regional Transmission Owner	PJM Member Generating Entity	PJM Member Load Serving Entity	PJM Member Marketer	Neighboring Control Areas
B.8	Requests for Regulation MWs via SCADA, ICCP	2-10 seconds or per EMS scan		7			
B.9	Real-time Transmission Status (Line Outages, etc.) [PJM dispatcher communication to other CCs] via SCADA, ICCP, and eDART	Per status change or per EMS scan	X				4
B.10	Real-time Generation Status (Generation Inquiries, etc.) PJM dispatcher communication to other CCs, MOC	Per status change or per EMS scan		X			4
B.11	Real-time Informational, Operational, and Emergency Messages	Per event	X				

B: EMS Services							
	Information Services	Periodicity for providing data	PJM Member Regional Transmission Owner	PJM Member Generating Entity	PJM Member Load Serving Entity	PJM Member Marketer	Neighboring Control Areas
	[broadcast to all TOs] via ICCP, Emergency Procedures						
B.12	Generation Dispatch [relayed ≤ 10s, or manually] via SCADA, ICCP	2-10 seconds or per EMS scan		X			
B.13	Generation Regulation Control [relayed ≤ 10s] via SCADA, ICCP	2-10 seconds or per EMS scan		7			
B.14	Real-time Telemetry (status & analog values) [relayed to other CCs] via SCADA, ICCP	2-10 seconds or per EMS scan	X	X	6		4
B.15	Performance Assessment Interval (PAI) Trigger via SCADA, ICCP	2-10 seconds or per EMS scan		O			

B: EMS Services							
	Information Services	Periodicity for providing data	PJM Member Regional Transmission Owner	PJM Member Generating Entity	PJM Member Load Serving Entity	PJM Member Marketer	Neighboring Control Areas

Key:
X – Required Service
O – Optional Service
1 – Mandatory For All Generation Within the PJM RTO
2 – Mandatory For Unit Specific Generation Bidding
3 – Mandatory For All Capacity Resources
4 – System Reliability Information Only
5 – Mandatory For Joint-Owned Unit Owners
6 – Mandatory If Not Attainable From Existing Telemetry
7 – Mandatory For Generators Offering Regulation
8 – Mandatory For Energy Storage Resource Model Participant and Open-Loop Hybrid Resources

Exhibit 3: EMS Services

C: Historical EMS Data Services							
	Information Services	Periodicity for providing data	PJM Member Regional Transmission Owner	PJM Member Generating Entity	PJM Member Load Serving Entity	PJM Member Marketer	Neighboring Control Areas
Inputs to PJM							
C.1	Historical EMS Information Requests [submitted per request to PJM for processing]	Per request	X				4
Outputs from PJM							
C.2	Historical EMS Information [distributed to requesting parties]	Per request	X				4

Key:
X – Required Service
O – Optional Service
1 – Mandatory For All Generation Within the PJM RTO
2 – Mandatory For Unit Specific Generation Bidding
3 – Mandatory For All Capacity Resources
4 – System Reliability Information Only
5 – Mandatory For Joint-Owned Unit Owners
6 – Mandatory If Not Attainable From Existing Telemetry

C: Historical EMS Data Services							
	Information Services	Periodicity for providing data	PJM Member Regional Transmission Owner	PJM Member Generating Entity	PJM Member Load Serving Entity	PJM Member Marketer	Neighboring Control Areas
7 – Mandatory For Generators Offering Regulation							

Exhibit 4: Historical EMS Data Services

D: Transmission Maintenance Planning Services							
	Information Services	Periodicity for providing data	PJM Member Regional Transmission Owner	PJM Member Generating Entity	PJM Member Load Serving Entity	PJM Member Marketer	Neighboring Control Areas
Inputs to PJM							
D.1	3-4 Day Ahead Transmission Maintenance Schedules [planned outages, submitted by transmission providers per Manual 03] via eDART	Per event	X				
D.2	3-4 Day Ahead Neighboring Control Area Transmission Maintenance Schedules (planned outages) [submitted by neighboring control areas] via phone and SDX	Per event					X

D: Transmission Maintenance Planning Services							
	Information Services	Periodicity for providing data	PJM Member Regional Transmission Owner	PJM Member Generating Entity	PJM Member Load Serving Entity	PJM Member Marketer	Neighboring Control Areas
D.3	Protection System planned outages via eDART or other communication methods	Per event	X	X			
Outputs from PJM							
D.4	3-4 Day Ahead Transmission Maintenance Schedules (planned outages) [confirmation of D.1] via eDART bridge to SDX	Daily	X				X
D.5	3-4 Day Ahead Neighboring Control Area Transmission Maintenance Schedules (planned outages) [confirmation of D.2]	Daily					X

D: Transmission Maintenance Planning Services							
	Information Services	Periodicity for providing data	PJM Member Regional Transmission Owner	PJM Member Generating Entity	PJM Member Load Serving Entity	PJM Member Marketer	Neighboring Control Areas
D.6	Transmission Maintenance Schedule (planned outages) [monthly report sent to all transmission providers] via eDART bridge to SDX	Monthly	X				X

Key:
X – Required Service
O – Optional Service
1 – Mandatory For All Generation Within the PJM RTO
2 – Mandatory For Unit Specific Generation Bidding
3 – Mandatory For All Capacity Resources
4 – System Reliability Information Only
5 – Mandatory For Joint-Owned Unit Owners
6 – Mandatory If Not Attainable From Existing Telemetry
7 – Mandatory For Generators Offering Regulation

Exhibit 5: Transmission Maintenance Planning Services

E: Transmission Services							
	Information Services	Periodicity for providing data	PJM Member Regional Transmission Owner	PJM Member Generating Entity	PJM Member Load Serving Entity	PJM Member Marketer	Neighboring Control Areas
Inputs to PJM							
E.1	Requests for Transmission Service [reserved through OASIS]	Per event		O	X	X	
Outputs from PJM							
E.2	Available Transfer Capability (ATC) [posted on OASIS]	Hourly			X	X	
E.3	Actual Energy Transactions [posted on OASIS 7 days later]	Daily	X	X	X	X	
E.4	Informational Messages [posted on OASIS]	Per event	X	X	X	X	
E.5	Transmission Service Reservations [posted on OASIS]	Per event			X	X	

E: Transmission Services							
	Information Services	Periodicity for providing data	PJM Member Regional Transmission Owner	PJM Member Generating Entity	PJM Member Load Serving Entity	PJM Member Marketer	Neighboring Control Areas

Key:
X – Required Service
O – Optional Service
1 – Mandatory For All Generation Within the PJM RTO
2 – Mandatory For Unit Specific Generation Bidding
3 – Mandatory For All Capacity Resources
4 – System Reliability Information Only
5 – Mandatory For Joint-Owned Unit Owners
6 – Mandatory If Not Attainable From Existing Telemetry
7 – Mandatory For Generators Offering Regulation

Exhibit 6: Transmission Services

F: Energy Transaction Services							
	Information Services	Periodicity for providing data	PJM Member Regional Transmission Owner	PJM Member Generating Entity	PJM Member Load Serving Entity	PJM Member Marketer	Neighboring Control Areas
Inputs to PJM							
F.1	External Energy Transactions via ExSchedule	Per event			X	X	
F.2	Non-PJM Energy Transactions (Wheels, etc.) [submitted by neighboring control areas] via ExSchedule	Per event					X
F.3	Updates / Additions to Energy Transaction Schedule via ExSchedule and NERC tag	Per event			X	X	X
F.4	Internal Energy Transactions via InSchedules	Per event			X		
Outputs from PJM							

F: Energy Transaction Services							
	Information Services	Periodicity for providing data	PJM Member Regional Transmission Owner	PJM Member Generating Entity	PJM Member Load Serving Entity	PJM Member Marketer	Neighboring Control Areas
F.5	External Energy Transactions [collectively confirmed by PJM & communicated to neighboring control areas] via ExSchedule	Prior to ech change in Net Schedule (approx. every 15 min)			X	X	X

Key:
X – Required Service
O – Optional Service
1 – Mandatory For All Generation Within the PJM RTO
2 – Mandatory For Unit Specific Generation Bidding
3 – Mandatory For All Capacity Resources
4 – System Reliability Information Only
5 – Mandatory For Joint-Owned Unit Owners
6 – Mandatory If Not Attainable From Existing Telemetry
7 – Mandatory For Generators Offering Regulation

Exhibit 7: Energy Transaction Services

G: PJM Administration Services						
	Information Services	PJM Member Regional Transmission Owner	PJM Member Generating Entity	PJM Member Load Serving Entity	PJM Member Marketer	Neighboring Control Areas
Outputs from PJM						
H.1	PJM Information [on PJM Web site]	X	X	X	X	X
H.2	RTO Information [on PJM Web site]	X	X	X	X	X
H.3	FERC Filings [on PJM Web site]	X	X	X	X	X
H.4	Training Information [on PJM Web site]	X	X	X	X	X
H.5	Emergency Information [on PJM Web site]	X	X	X	X	X
H.6	General Administration Information [distributed via fax to all participants]	X	X	X	X	X
H.7	Regulatory Reporting (FERC 714, 715; EIA 411)	X	X	X	X	

G: PJM Administration Services						
	Information Services	PJM Member Regional Transmission Owner	PJM Member Generating Entity	PJM Member Load Serving Entity	PJM Member Marketer	Neighboring Control Areas

Key:
X – Required Service
O – Optional Service
1 – Mandatory For All Generation Within the PJM RTO
2 – Mandatory For Unit Specific Generation Bidding
3 – Mandatory For All Capacity Resources
4 – System Reliability Information Only
5 – Mandatory For Joint-Owned Unit Owners
6 – Mandatory If Not Attainable From Existing Telemetry
7 – Mandatory For Generators Offering Regulation

Exhibit 8: PJM Administration Services

Attachment B: Schedule of Data Submittals

In order for PJM to provide satisfactory evidence to demonstrate compliance, PJM Member Transmission Owners are required to provide the following information to PJM on a frequency noted below:

NERC Reliability Standard Reference	To be Submitted	Frequency and Date
EOP-005 R8	Assurance that PJM Member TO personnel have been trained annually in the implementation of the restoration plan and that they have participated in restoration exercises with auditable records that could be obtained upon request by PJM. Response can just be an affirmative confirmation. Assurance could be provided via submittals through PERCS website.	(Annual) Recommended by December 31
EOP-008 R5	Certification to PJM that the TO Operating Plan for backup functionality has been reviewed in its entirety and updated appropriately. Such review effort should be noted in plan revision history section. Response can just be an affirmative confirmation. Submittal to be provided via PERCS website.	(Annual) Recommended by December 31
EOP-008 R5.1	Certification to PJM of changes to the TO Operating Plan for backup functionality. Submittal to be provided via PERCS website.	Within 60 days of any changes
EOP-010 R1.2	Submit PJM Member TO GMD procedure in instances where a PJM Member TO has a GMD procedure. Ensure Annual Review is noted in plan revision history section. Submittal to be provided via PERCS website.	(Annual) Recommended by April 1st or anytime the TO GMD procedure is updated

Attachment C: PJMnet ICCP Failover Tests

The following four pages are full page sized diagrams of Attachment C: PJMnet ICCP Failover Tests.

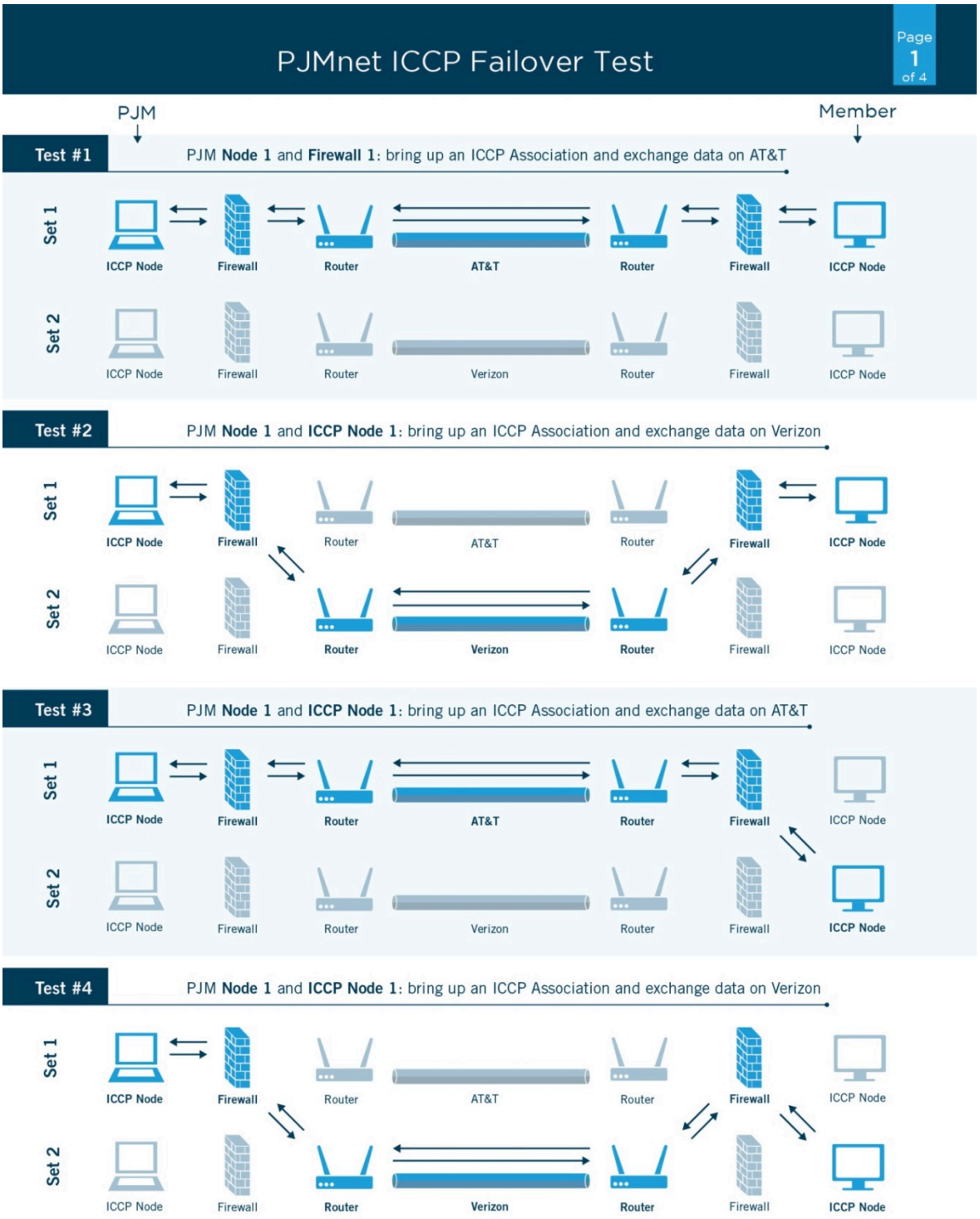
PJMnet ICCP Failover Test
Page 1 of 4
PJM
Member
Test #1
PJM Node 1 and Firewall 1: bring up an ICCP Association and exchange data on AT&T
Set 1
ICCP Node
Firewall
Router
AT&T
Router
Firewall
ICCP Node
Set 2
ICCP Node
Firewall
Router
Verizon
Router
Firewall
ICCP Node
Test #2
PJM Node 1 and ICCP Node 1: bring up an ICCP Association and exchange data on Verizon
Set 1
ICCP Node
Firewall
Router
AT&T
Router
Firewall
ICCP Node
Set 2
ICCP Node
Firewall
Router
Verizon
Router
Firewall
ICCP Node
Test #3
PJM Node 1 and ICCP Node 1: bring up an ICCP Association and exchange data on AT&T
Set 1
ICCP Node
Firewall
Router
AT&T
Router
Firewall
ICCP Node
Set 2
ICCP Node
Firewall
Router
Verizon
Router
Firewall
ICCP Node
Test #4
PJM Node 1 and ICCP Node 1: bring up an ICCP Association and exchange data on Verizon
Set 1
ICCP Node
Firewall
Router
AT&T
Router
Firewall
ICCP Node
Set 2
ICCP Node
Firewall
Router
Verizon
Router
Firewall
ICCP Node

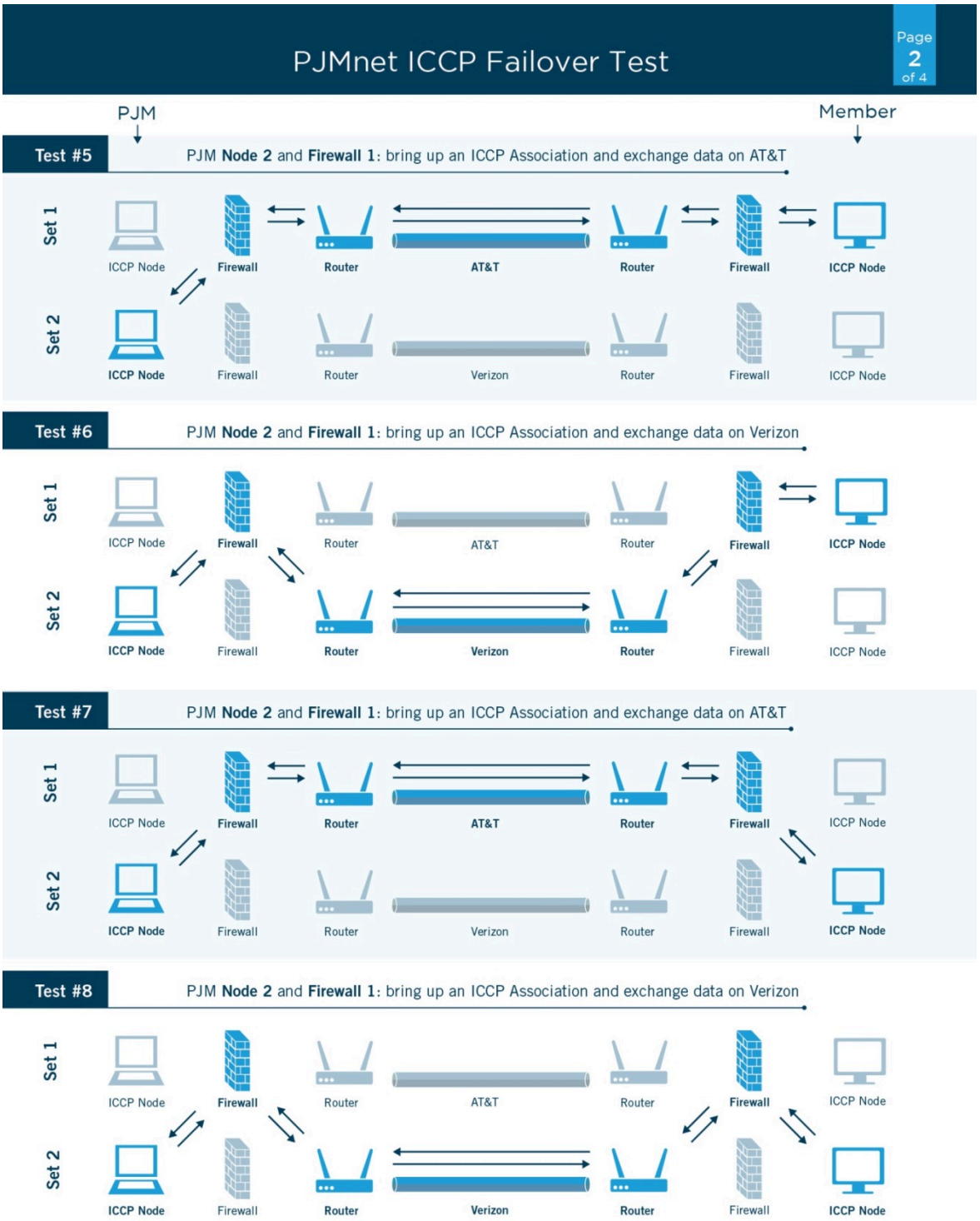
PJMnet ICCP Failover Test
Page 2 of 4
PJM
Member
Test #5
PJM Node 2 and Firewall 1: bring up an ICCP Association and exchange data on AT&T
Set 1
Set 2
ICCP Node
Firewall
Router
AT&T
Verizon
Test #6
PJM Node 2 and Firewall 1: bring up an ICCP Association and exchange data on Verizon
Test #7
PJM Node 2 and Firewall 1: bring up an ICCP Association and exchange data on AT&T
Test #8
PJM Node 2 and Firewall 1: bring up an ICCP Association and exchange data on Verizon

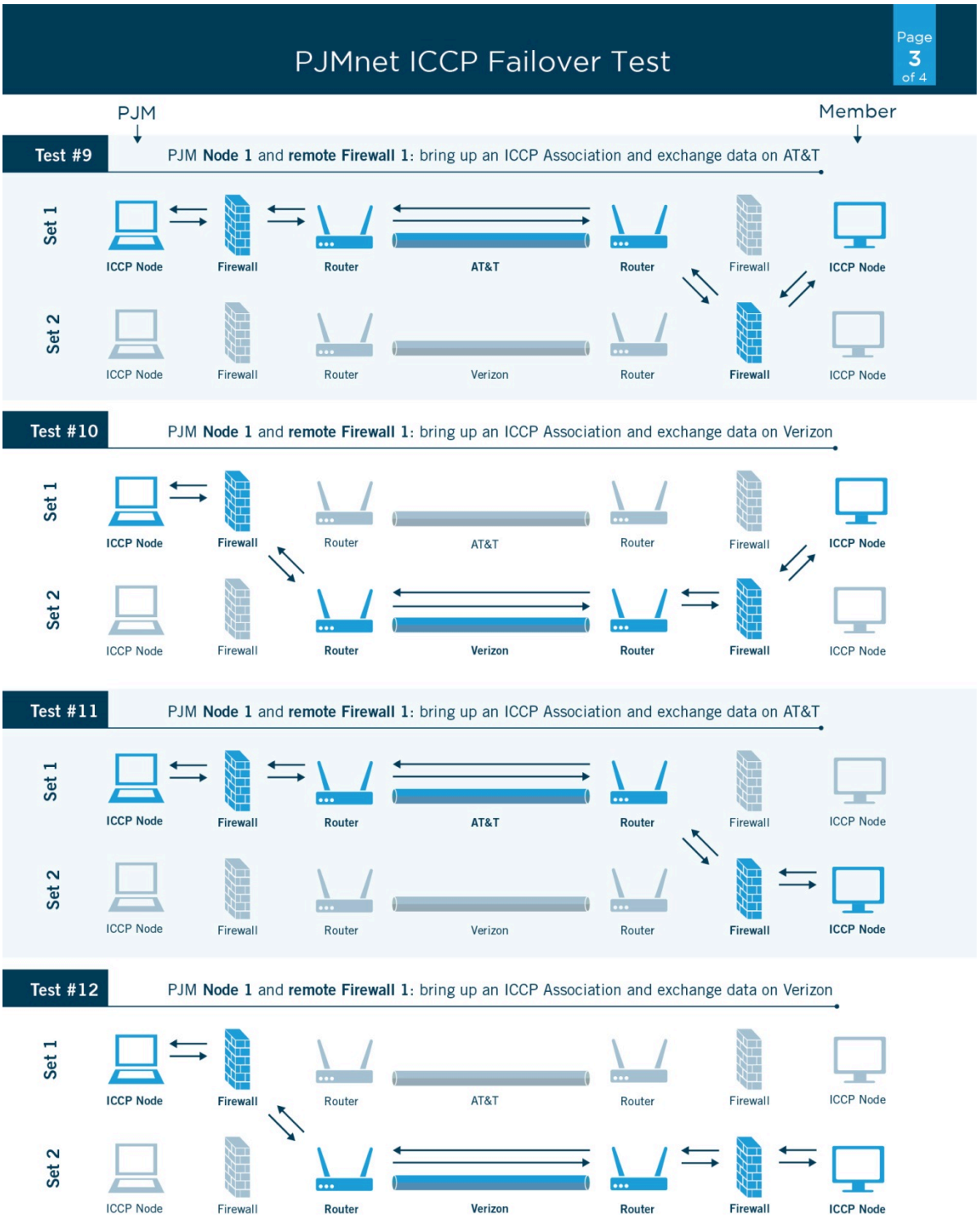
PJMnet ICCP Failover Test
Page 3 of 4
PJM
Member
Test #9
PJM Node 1 and remote Firewall 1: bring up an ICCP Association and exchange data on AT&T
Set 1
ICCP Node
Firewall
Router
AT&T
Router
Firewall
ICCP Node
Set 2
ICCP Node
Firewall
Router
Verizon
Router
Firewall
ICCP Node
Test #10
PJM Node 1 and remote Firewall 1: bring up an ICCP Association and exchange data on Verizon
Set 1
ICCP Node
Firewall
Router
AT&T
Router
Firewall
ICCP Node
Set 2
ICCP Node
Firewall
Router
Verizon
Router
Firewall
ICCP Node
Test #11
PJM Node 1 and remote Firewall 1: bring up an ICCP Association and exchange data on AT&T
Set 1
ICCP Node
Firewall
Router
AT&T
Router
Firewall
ICCP Node
Set 2
ICCP Node
Firewall
Router
Verizon
Router
Firewall
ICCP Node
Test #12
PJM Node 1 and remote Firewall 1: bring up an ICCP Association and exchange data on Verizon
Set 1
ICCP Node
Firewall
Router
AT&T
Router
Firewall
ICCP Node
Set 2
ICCP Node
Firewall
Router
Verizon
Router
Firewall
ICCP Node

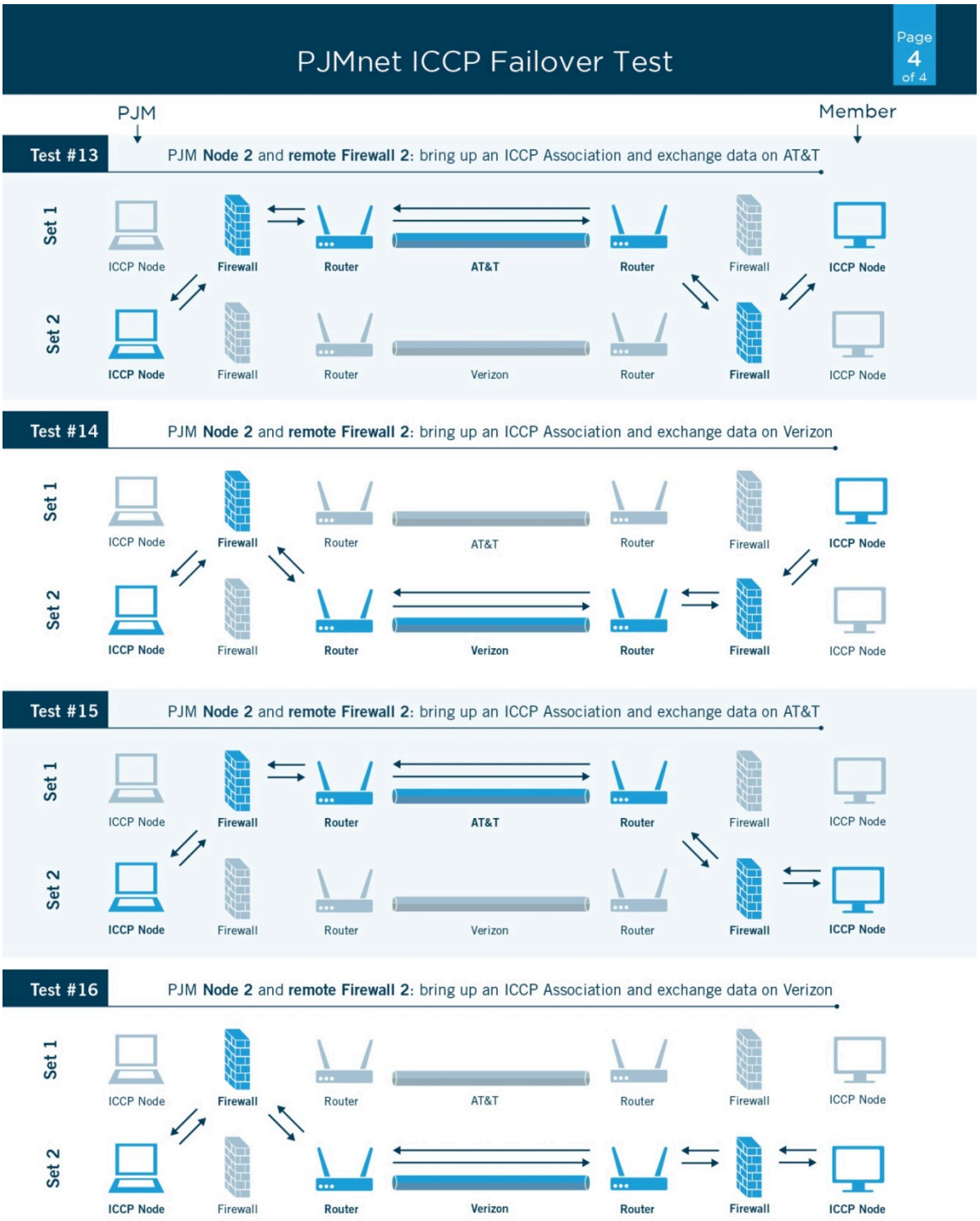
PJMnet ICCP Failover Test
Page 4 of 4
PJM
Member
Test #13
PJM Node 2 and remote Firewall 2: bring up an ICCP Association and exchange data on AT&T
Set 1
Set 2
ICCP Node
Firewall
Router
AT&T
Verizon
Test #14
PJM Node 2 and remote Firewall 2: bring up an ICCP Association and exchange data on Verizon
Test #15
PJM Node 2 and remote Firewall 2: bring up an ICCP Association and exchange data on AT&T
Test #16
PJM Node 2 and remote Firewall 2: bring up an ICCP Association and exchange data on Verizon

Attachment D: Tie Line Meter Placement and Telemetry

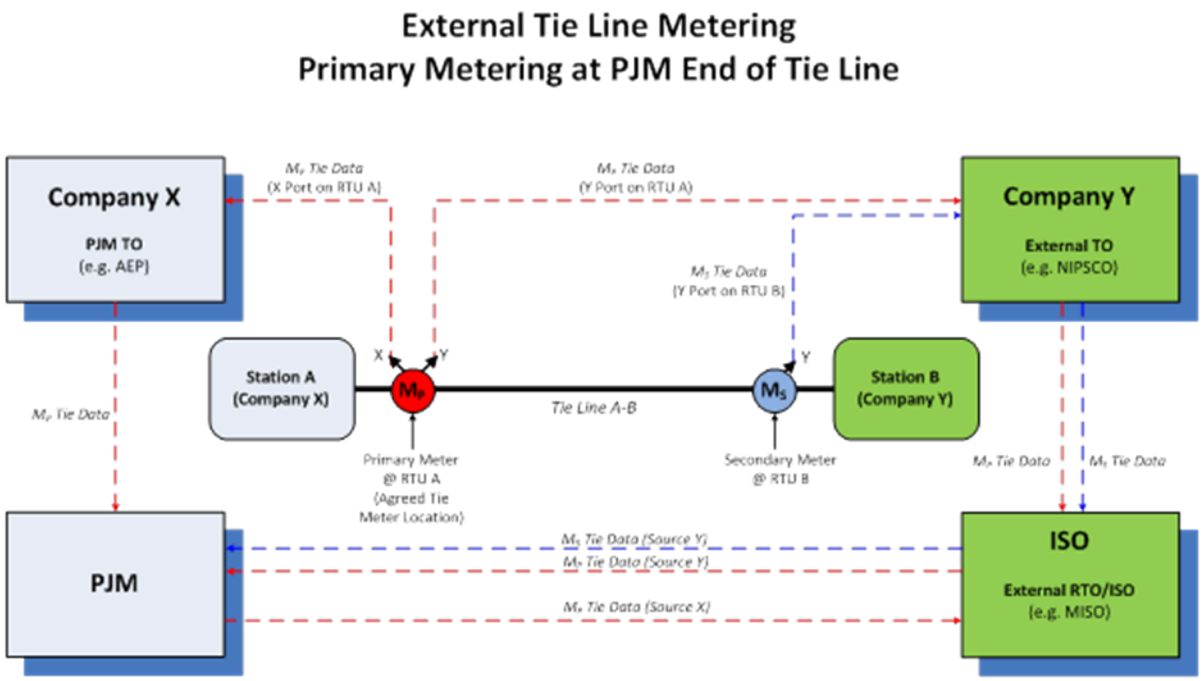

Exhibit 1

External Tie Line Metering
Primary Metering at External End of Tie Line

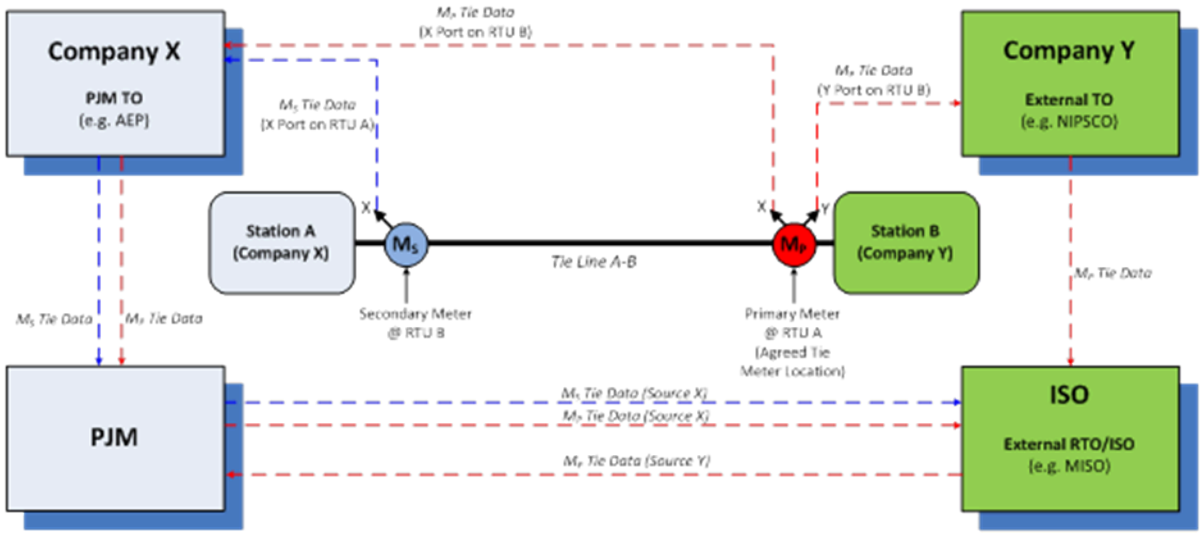

Exhibit 2

External Tie Line Metering
Pseudo Tie/Dynamic Schedule

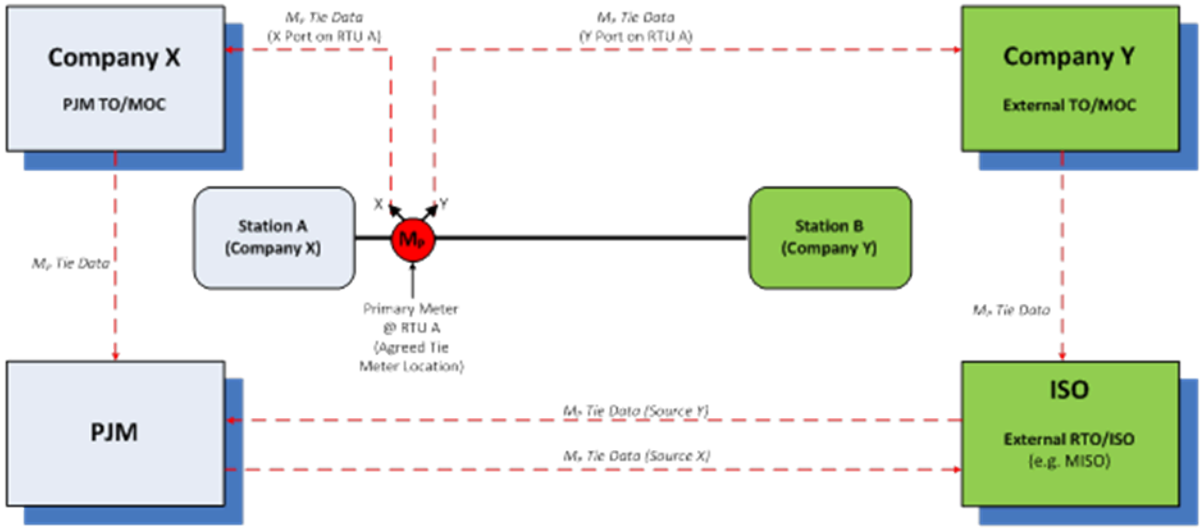

Exhibit 3

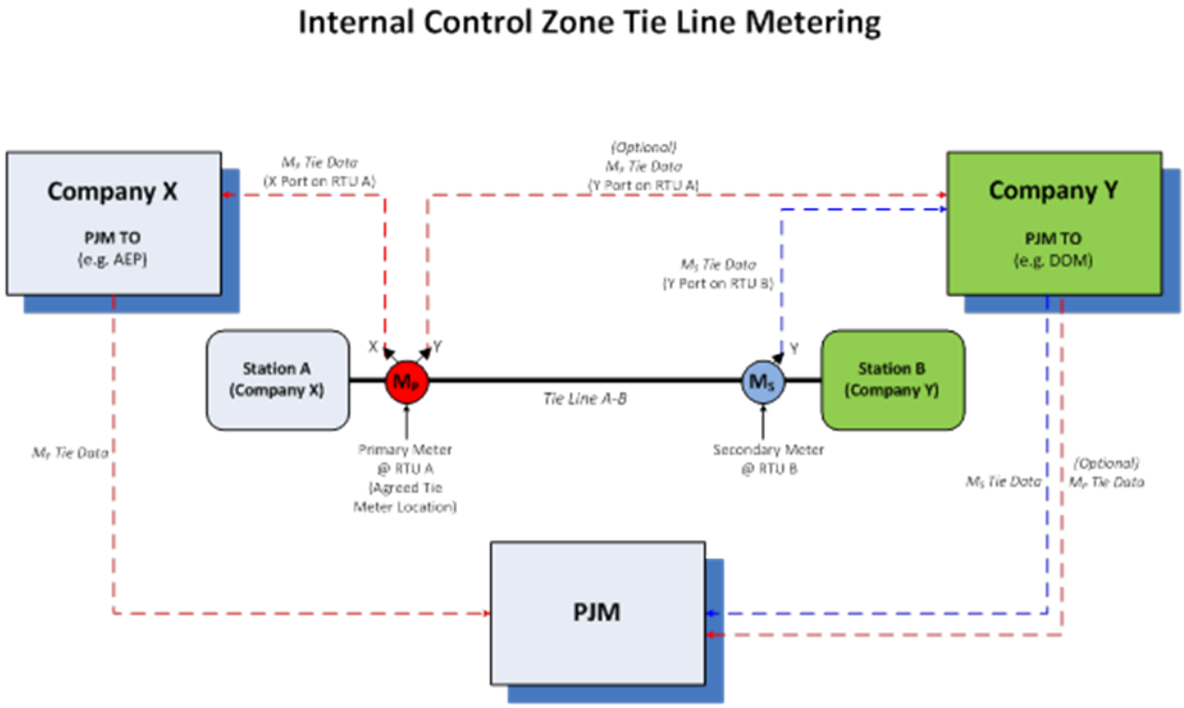

Exhibit 4

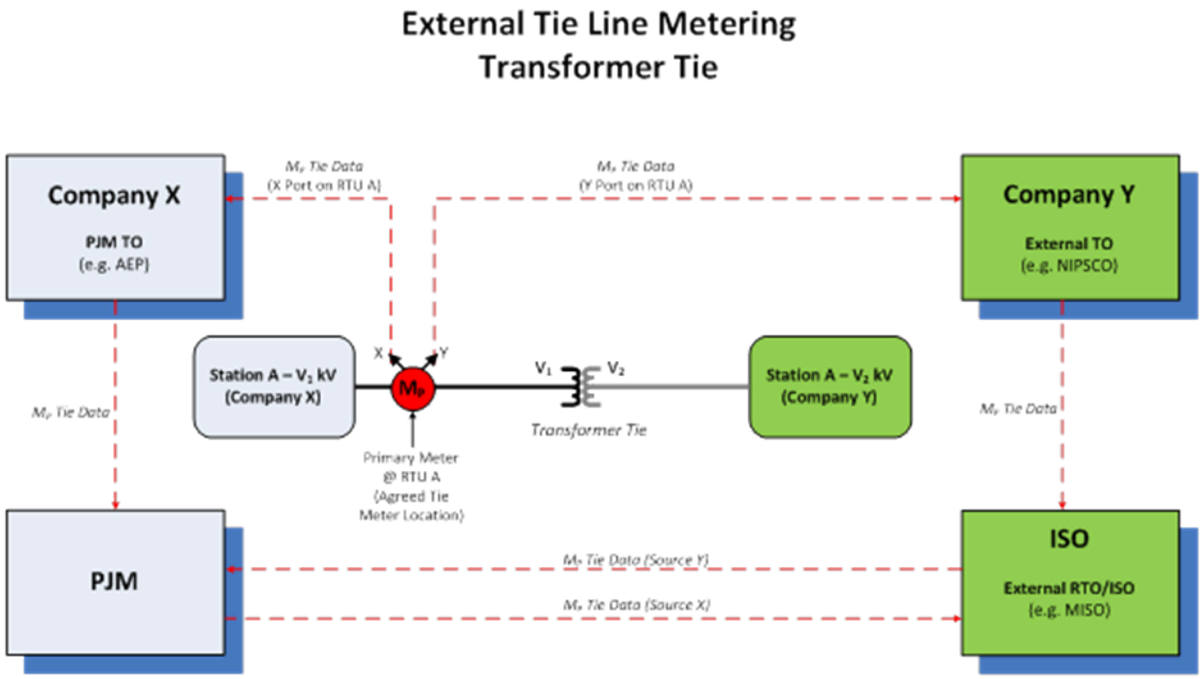
External Tie Line Metering
Transformer Tie
Company X
PJM TO
(e.g. AEP)
Company Y
External TO
(e.g. NIPSCO)
Station A – V1 kV
(Company X)
Station A – V2 kV
(Company Y)
X
Y
V1
V2
Transformer Tie
Primary Meter
@ RTU A
(Agreed Tie
Meter Location)
PJM
ISO
External RTO/ISO
(e.g. MISO)

Exhibit 5

Attachment E: Reliability Guidelines to Mitigate the Unplanned Loss of EMS Real Time Assessment (RTA) Capabilities

This appendix is intended to serve as a guideline for PJM and PJM Members to implement alarms, processes, and controls to minimize the impacts that inaccurate or degraded real-time data or loss of such data can have on their ability to perform a Real Time Assessment. The items listed in this guideline are meant to serve as best practices for PJM and PJM Members to follow. They are not mandatory requirements, and they are not all inclusive of the methods that can be used to minimize Real-Time Assessment (RTA) disruptions.

As PJM and PJM Member Transmission Owners (TOs) expand their Energy Management System (EMS) capabilities and their model sizes, the models utilize more and more real-time EMS data to improve the accuracy of their solutions. The EMS data may be supplied from internal RTUs or via ICCP links with PJM and/or neighboring entities. And while these expanded models provide better situational awareness, increase redundancy of monitoring across borders, and provide an overall enhancement to reliability when working properly, they can also lead to an increase risk of failure if these external/additional data sources fail. To help mitigate these risks, the following guidelines have been developed based on the best practices and lessons learned from the industry.

1. Call out Procedures
    a. System Operators are typically the first to identify when a Real Time Assessment is in a failed or degraded state. However, engineers and other support staff may be required to correct the issue. Procedures should be developed to ensure an expedited call out process exists, and the engineers and other support staff are trained in the proper response, including awareness and utilization of the subsequent items in this guideline.
2. Notification of planned/unplanned RTU and ICCP Datalink outages
    a. Section 3.8.1 of this manual should be followed to ensure awareness of planned outages by all potentially impacted parties.
    b. Section 3.8.2 of this manual should be followed to ensure awareness of unplanned or emergency outages. Any unplanned outage(s) need to be promptly communicated to PJM Control Room for awareness and then dissemination to other potentially impacted parties by the PJM dispatchers.

3. Alarming – Alarms should be enabled and configured to help identify the conditions listed below. In addition, the alarms should be prioritized appropriately to allow for dispatchers and support staff to quickly recognize the events impacting the Real Time Assessment.
    a. Loss of any direct ICCP datalink with PJM or another entity
    b. Loss of any indirect ICCP datalink with other entities
        i. If a PJM Member TO is utilizing the direct ICCP link it has with PJM to receive another entity's real-time EMS data, PJM can provide an indication that shows the entity's ICCP link up/down status via ICCP. This indication can then be utilized to drive alarming in the PJM Member TO's Control Room. PJM Member TOs can contact PJM Telemetry Support Group to request the ICCP link up/down status for any entity's ICCP data they are using for their Real-Time Assessment.
        ii. Example: TO A is receiving TO B's real-time EMS data via the direct ICCP link with PJM. PJM can provide a data point via ICCP to TO A that shows TO B's ICCP link up/down status with PJM.
    c. Violation of reasonability limits
        i. Reasonability limits should be created for all data points (MW, MVAR, KV, AMP, etc.) that are used by the entity's Real-Time Assessment. This will help quickly identify any extremely erroneous RTU values that could cause state estimator to immediately fail. Consideration to the reasonability alarm limits should be given to the voltage class and measurement type when setting thresholds for alarming. For example, the reasonability limit for a 765 kV facility should be set differently than the reasonability limit for a 115 kV facility.
    d. Violation of rate of change limits
        i. Rate of change limits and alarms should be created to identify data fluctuations that could signify either a legitimate change in BES state (i.e. generator trip) or inaccurate or degraded RTU data. As with reasonability limits, consideration should be given to the voltage class and measurement type when setting thresholds for alarming.

4. Loss of ICCP ride-through capabilities
    a. In the event of failed ICCP datalinks, PJM EMS and PJM Member TO's EMS should have functionality to use the "last good data" received for Real Time Assessments.
    b. PJM and PJM Member TOs should have the ability to put incoming ICCP links into a "read-only" mode. This is referred to as "View-Only Mode" at PJM, and is utilized when ICCP datalinks are on a planned outage. Putting an ICCP datalink in this mode allows system operators to see the data, but not have that data affect the Real-time Assessments until after the planned outage is completed and the data integrity is confirmed by support staff and/or system operatoters. The PJM View-Only Mode will extend protection against incorrect data to all output ICCP datalinks receiving any data points of the PJM input ICCP datalink switched to the mode. For example if an input datalink to PJM is put in View-Only Mode for a planned maintenance event, an output datalink from PJM to another entity with any subset of that data will see the data as holding the last good value until the input link is taken out of View-Only Mode. PJM and members will coordinate to reduce the total time in View-Only Mode. PJM offers an ICCP status point that includes View-Only Mode status in addition to the standard link up/down status, so that downstream recipients of that data can differentiate between planned use of View-Only Mode and actual telemetry issues in real-time without having to reference planned maintenance schedules.
    c. PJM and PJM Member TOs should utilize zonal state estimation to minimize and isolate the area(s) of solution divergence.
5. Communication of Real Time Assessment capability failures
    a. PJM and PJM Member TOs should develop and implement call-out procedures to notify support staff when a Real-Time Assessment fails.
    b. As outlined in Section 2.3.1 of this manual, PJM Member TOs shall notify PJM of Real-Time Assessment failures exceeding 15 minutes. If the cause of the Real-Time Assessment failure is unknown, PJM Member TO should include the last good solve time and any other relevant information regarding the area of convergence problem in the communications to the PJM Control Room. PJM may be able to help identify any system topology, data issues, network changes, etc. that may have contributed to the problem.

Attachment F: Overview and Requirements for Remote Operations of Market Operations Centers due to Exceptional Circumstances

PJM recognizes that, as a consequence of Exceptional Circumstances (an event or effect that can be neither anticipated nor controlled, including but not limited to any act of public enemy, war, insurrection, riot, fire, severe weather, natural disaster, flood, civil unrest, explosion, pandemic or other public health emergency), Market Participants who maintain Market Operations Centers (MOCs) may find it necessary to move some or all of their control center operations to one or more non-traditional remote locations, such as a new temporary facility or the residences of control center personnel, in an effort to protect the safety and well-being of staff while maintaining control room functions. For purposes of this document, it is assumed that a member company's Energy Management System (EMS) is still functional and that only the MOC dispatch function is relocating to alternate (non-traditional) location. PJM has identified potential risks in moving to such remote control center operations which must be mitigated through compliance with the requirements set forth in this attachment such as:

- Reduced reliability of voice and data communications with PJM and other operating entities
- Reduced physical and cyber security controls
- Reduced operator situational awareness or visibility of relevant data associated with possible equipment limitations at the remote site
- Reduced effectiveness of communications

The North American Electric Reliability Corporation (NERC) has provided guidance with regards to remote control center operations. PJM recognizes that a Market Participant's transition to remote MOC operations may be necessary as an absolute "last resort" when operations cannot be continued in a traditional primary or backup control room facility due to an imminent risk of personnel safety and the associated control center being uninhabitable because of an Exceptional Circumstance. PJM requests this type of remote operations only be implemented after all other options have been exhausted. PJM Market Participant's (MOCs) that are operating from a remote control center in accordance with this Attachment shall resume traditional MOC control center operations in compliance with the PJM Manuals other than this Attachment as soon as possible. Timely updates and notification to PJM as to the status of MOCs is critical to and required under this Manual provision.

The use of MOCs is an integral component of ensuring the reliable operation of generation and transmission facilities in the PJM System. Having operators work remotely is inconsistent with PJM Manual requirements.

Any Market Participant that transitions its MOC to remote control center operations will comply with each of the requirements set forth in this Attachment. Market Participants' (MOCs) will be

expected to meet or exceed these requirements throughout the period of the operation of a remote MOC.

Compliance with the requirements in this Attachment does not absolve the Market Participant from its obligations to comply with all applicable laws, regulations, or NERC Reliability Standards, including the PJM Governing Agreements other than the MOC control center requirement in the PJM Manuals. A Market Participant shall make every effort to comply with these laws, regulations, standards, and agreements to the greatest extent possible. Whether Exceptional Circumstance conditions may justify the exercise of enforcement discretion in evaluating compliance is a matter to be considered by those government authorities with enforcement jurisdiction, and it is the obligation of the Market Participant to seek any necessary approvals or waivers needed as a result of transitioning to remote MOC control room operations in accordance with this Attachment.

Key Reliability Requirements for Remote Operations

Equipment and Communication Requirements

1. Each Market Participant prior to the transition of remote operations, shall notify the PJM NERC Compliance department (contact information below) of their intention to implement remote operations. The Market Participant shall review all requirements in this manual attachment and provide written documentation to PJM of how it will meet each requirement including the cyber and physical security requirements. Furthermore, the Market Participant will notify PJM of any concerns or limitations that are not specified in the requirements but could have an impact to normal operations.
    - PJM NERC Compliance – Email: Regional_Compliance@pjm.com
        - **Primary Contact –** Gizella Mali
            - Email: Gizella.Mali@pjm.com
            - Office Phone: 610-666-8962
            - Cell Phone: 445-234-7388
        - **Alternate Contact –** Becky Davis
            - Email: Elizabeth.Davis@pjm.com
            - Cell Phone: 610-806-0249
2. Each Market Participant shall notify PJM Dispatch before and after transitioning to remote control center operations so that communications capabilities can be tested.
3. If operations are transitioned from one remote location to another, (if communications are not being forwarded from the control center) PJM Dispatch shall be notified of the change and communications should be tested and verified with PJM Dispatch.

4. Market Participants shall ensure that each of its operator(s) for communications with PJM has the following equipment at the location for remote control center operations available 24 hours per day/7 days per week:
    a. High-speed internet service with sufficient bandwidth and data allowances to accommodate all real-time data feeds necessary to perform the operator's functions, including receipt of XML data if applicable;
    b. Sufficient internet or cellular telephone communications capable of receiving calls forwarded from the dedicated PJM ring downs. This should be achieved with diversely routed backup telephone communications capability using a different mode (e.g. cellular instead of internet, or vice versa).
5. Market Participants shall establish contingency plans for failures to power, internet service, cellular telephone communications or equipment being used by the operator at the MOC's remote location (e.g. battery backup, cellular mobile hotspot, transfer operations to another remote operator, etc.).
6. Each Market Participant shall ensure that there are a sufficient number of operators on shift at any time to maintain reliable operations.
7. 24 hours per day/7 days per week voice and data communications must be maintained between PJM operations and the MOC operators operating from a remote control center location.
8. Each Market Participant shall ensure that voice communications from PJM are answered by the operator, and do not go to voice mail or are answered by or forwarded to some other person other than the intended operator.
9. Each Market Participant shall ensure that, prior to commencing remote control center operations, it has communicated all appropriate contact information to each resource (generator, demand response, etc.) represented by the Market Participant.
10. The Market Participant, in addition to responding to hotline calls, shall maintain continuous communication with all operators in the virtual control room (real time ops, transmission ops, commercial ops, etc. and with all power plants for which the MOC is providing MOC services).
11. Each Market Participant shall ensure its information technology staff are available and have access to each remote site if technical issues occur.
12. Remote operations shall not impair a Market Participant's ability to maintain control over its generation or transmission facilities and to carry out operating instructions issued by PJM.
13. Market Participants shall update generator owner eDART contact survey information for primary and secondary contacts. In addition, any changes for dispatch phones and contacts for Client Managers shall be updated.

Redundancy Requirements in Remote Operations Sites

1. A standby or backup operator shall be available 24 hours per day/7 days per week in the event the primary operator cannot perform their duties at the remote control center for any reason. This standby operator shall comply with all requirements in this Attachment, and be ready to assume shift responsibility immediately when needed.

Cyber Security Requirements

1. The Market Participant shall adhere to all NERC Critical Infrastructure Protection (CIP) standards that are applicable to the Market Participant's NERC registration status unless an exception request has been approved by the applicable Regional Entity.
2. The remote operator's computer and other hardware shall be issued and configured by the MOC.
3. Assets shall be secured in accordance with the MOC's existing security policies, standards and procedure.
4. Web browsing from an operator's computer shall only occur when required to support functions necessary for the operation of the MOC.

Physical Security Requirements

1. While not in use, the remote operator's computer shall be locked, logged off, or turned off to reduce unauthorized use or access.
2. In general, the remote operator shall adhere to all Market Participant's internal company policies with regards to Physical Security.

Revision History

Revision 48 (09/25/2023):

- Cover-to-cover periodic review. Minor grammar/style corrections in Section 1 and 2.
- Section 4.4 Interpersonal Communication Capability Failure. Clarifying text added for requirements to notify of interpersonal communication system failure.
- Attachment A: Data Specification and Collection. Note added to clarify gen unit operating limit update requirements.
- Attachment B: Schedule of Data Submittals, "Recommend (date)" changed to "Recommended by (date)"

Revision 47 (05/09/2023):

- Section 1.1 updates to specific terms for environment and EMS subsystems due to the May 2023 change of PJM EMS platforms.

Administrative Change (Ryan Nice approved 12/16/2022):

- Attachment F: Updated binary pronoun usage (e.g., “his or her” to a gender-neutral equivalent (e.g., “their,” etc.) in order to support PJM’s diversity, equity and inclusion efforts.

Administrative Change (Dave Anders approved 8/17/2022):

- Reinserted the 3.2.1.1 paragraphs from Revision 44 that did not get included in later revisions.

Revision 46 (7/27/2022)

- Section 1.9: Added PJM emergency test event notifications as a type of data retrieved from DR Hub.

Revision 45 (5/25/2022):

- Section 3.2.3: Added Dynamic Ratings to the list of required verbal or electronic data during EMS datalink outages.

Revision 44 (4/27/2022)

- Annual periodic review.
- Section 2.5.6: Clarified loss of control center functionality procedures as it relates to EOP-008 and TO/TOP Matrix.
- Section 3.2.1.1: Clarified the responsible party for protecting all Real-time Assessment and Real-time monitoring data while in transit, as it relates to CIP-012.
- Section 4.1.5: Added additional entities with which Member communications are required, as it relates to COM-001 and TO/TOP Matrix.

- Attachment B: Removed EOP-008 R7 reference as this is now covered in Section 2.5.6.

Revision 43 (11/17/2021):

- Attachment F: Revisions made throughout to make the Attachment permanent for all Exceptional Circumstances rather than only the COVID-19 Pandemic.

Administrative Change (06/28/2021):

- Attachment F COVID date extended from June 30, 2021 to December 31, 2021

Administrative Change (03/30/2021; Approved by Ryan Nice):

- Periodic Review is up to date with “no changes”
- Updated manual ownership from Jeff Schmitt to Ryan Nice

Administrative Change (12/17/2020):

- Attachment F: Due to the ongoing COVID-19 pandemic, the expiration of these guidelines were extended to June 30, 2021.

Revision 42 (10/01/2020):

- Section 3.6: Created 2 subsections for Required SCADA Data and Required Synchrophasor Data, and defined Synchrophasor data requirements.

Administrative Change (05/28/2020):

- Attachment A: Updating “Equipment model exchange” to “EMS model exchange”. Both refer to the EMS network model information exchange. The change is being made since EMS model exchange is a widely used and known term.

Revision 41 (05/28/2020):

- Cover to Cover Periodic Review
- Attachment A: Added external entities PJM shares network model information with
- Attachment A: To comply with TOP-003, added a new column in the data specification tables that reflects the periodicity of providing the mentioned data where applicable
- Attachment A: Removed Row B.5 Black Start Test Data from Table B since this is not an EMS service
- Attachment A: Removed Row B.16 AVR/PSS Excitation control since this is not an output from PJM
- Attachment A: Changed Row B.3.5 Frequency input from ‘Required’ to ‘Optional’ for PJM Member Generating Entitie
- Attachment A: Changed Row B.3.6 Status of BES Circuit Breakers from ‘Required’ to ‘Mandatory if not Attainable by Existing Telemetry’ for PJM Member Generating Entities
- Attachment B: Removed references to EOP-005-3 R3 and R4, as these are already covered by Manual 36 Attachment G

Administrative Change (04/24/2020):

- Attachment F: Overview and Requirements for Remote Operations of Market Operations Centers during the COVID-19 Pandemic: added as a temporary change per review at the Operations Committee. Markets and Reliability Committee was not asked to endorse this addition.

Revision 40 (05/30/2019):

- Cover to Cover Periodic Review.
- Section 1: Renamed eRPM to Capacity Exchange.
- Section 3.2.4: Corrected references to subsections of Section 3.2.4 within the text.
- Section 3.3.2: Section reviewed for clarity. New table added to define the data quality requirements.
- Section 3.8: Renamed PJM Client Managers to PJM Member Relations.
- Attachment A: Added State of Charge as a required data point to be sent to PJM via SCADA/ICCP for Energy Storage Resources.
- Attachment B: References to EOP-005 and EOP-008 NERC Standards are updated with the new version of these standards.
- Attachment E: New Attachment describing reliability guidelines to mitigate the unplanned loss of EMS Real Time Assessment capabilities. These guidelines were developed by the members of System Operating Subcommittee – Transmission (SOS-T).
- Section 2.3.1 and Section 2.7: Added reference to the new Attachment E for the reliability guidelines to mitigate the unplanned loss of EMS Real Time Assessment capabilities.

Revision 39 (09/27/2018):

- Section 1.6: Revised language to explain what Markets Gateway tool is used for instead of a detailed overview of PJM Markets which is covered in Manual 11.
- Section 2.3.1: Changes related to TOP-001 R13 and TO/TOP Matrix regarding Real-time Assessment capability requirements
- Section 2.7: NERC Standard references to TOP-001 R1, R12, R14 and TOP-003 R1, R3, R5 updated.
- Section 3.2:
  - Added missing information about DNP3 communication protocol and Jetstream system, and revised the section for clarity.
  - Added new requirement regarding ICCP data definition files.
- Section 3.3: Revised language for clarity and alignment with PJM Manual M14D.
- Section 4.1: Per COM-001, added Distribution Providers to the list of entities PJM has voice communications with.
- Section 4.2: Per COM-001, added Alternate Interpersonal Communication requirement for Transmission Owners.

- Section 4.5.3: New language to define what qualifies as Emergency in accordance with COM-002.
- Section 4.5.4: Added language covering the verification steps taken by PJM and TO operators prior to taking actions to control thermal and voltage constraints.
- Attachment A:
  - Table A: Removed the references to the data submission timeline requirements for Generation scheduling.
  - Table B: Added PAI Trigger via SCADA/ICCP as an optional service for generating entities.
  - Table B and D: Updated communication requirements for Protection System outages in accordance with NERC Standard PRC-001 and TOP-003.
- Attachment B: Reworded EOP-008-1 R5 to ensure TOs are submitting the right evidence.
- Changed references to Local Control Center (LCC) to Transmission Owner Control Center.
- Updated Manual owner to Jeff Schmitt

Administrative Change (09/27/2018):

- Revision 38 included a Cover to Cover Periodic review

Revision 38 (03/31/2018):

- Section 2.3.1: New language related to the TO responsibilities per TO/TOP Matrix for TOP-010-1(i) R1, R4
- Section 3.2.3: Added language regarding communication of data quality issues.
- Section 5.2: Clarified the definition of Tie Line to include Dynamic Transfers
- Section 5.2.1: Clarified language about telemetry requirements for Tie Lines

Revision 37 (02/26/2018):

- Attachment A: revised to add restoration planning data as a type data to be shared with Transmission Owners for generators that are in the TO restoration plan. This change was previously endorsed on 12/22/2017 by Markets and Reliability Committee. Change is now effective following the FERC Order dated February 16, 2018 accepting PJM filing for corresponding Operating Agreement revisions.

Administrative Change (01/05/2018):

- Attachment A: Deferring Revision 36 changes regarding system restoration planning data sharing until after FERC approval of Operating Agreement.

Revision 36 (01/02/2018):

- Section 2.3.1: updated references to TOP-004 and TOP 007.
- Section 2.7: updated references to TOP-004, TOP-006 and TOP-008.

- Section 3.2: revised language to clarify EMS data communication methods to PJM during data link or RTU/telemetry devices outages.
- Section 3.8: revised language to absorb Section 1.3 of Manual 13 regarding requirements during ICCP/DNP outages.
- Attachment A: revised to add a new generation scheduling service for system restoration planning.

Revision 35 (07/27/2017):

- Section 3.2.3 - revised language to clarify EMS data communication methods to PJM during data link or RTU outages.
- Section 4.1 - revised language to comply with COM-001-3
- Section 4.1.5 - new section regarding member communications with field personnel.
- Section 4.5.1 - revised language to comply with TOP-001-3 (R1).
- Attachment A, B.4 - added detail regarding AVR/PSS control.
- Attachment B - removed TOP-006-2 R6, EOP 003-1 R2 and EOP 003-1 R8 references.

Revision 34 (4/1/2017):

- Section 5.2.1.6, Internal Tie Lines, Special Cases and Transformer Tie Lines, the minimum required scan rate was changed from 4 seconds or less to 10 seconds or less.
- Attachment A, Information Access Matrix, redressed as Data Specification and Collection to meet IRO-010-2 and TOP-003-3.
- Attachment A, references to eDATA replaced with Data Viewer.
- Attachment A, Part A, added A.2.1, to create a separate row for Neighboring Control Areas who submit outages via SDX, not eDART.
- Attachment A, Part B, B.14, AVR/PSS Excitation Control via eDart, Required Service moved from Transmission Owner to Generating Entity to correct error.
- Attachment A, Part D, updated with references to SDX for D.2, D.3 and D.5.
- Attachment A, Part E, updated E.1 per latest OASIS work flows and deleted E.2 which is now covered in E.1.
- Attachment A, Part E, deleted E.6 – PJM does not offer ancillary services via OASIS.
- Attachment A, Part E, deleted E.8 – PJM does not offer a billing summary via OASIS.
- Attachment A, Part G: Long-term Planning Services removed. See Manual 3A, Section 2.2 for equivalent information.
- Updates and corrections to PJM email addresses in Section 3.

Revision 33 (12/15/2016):

- Section 2.5.6. Reference to NERC BAL-005-0 (out of date) changed to BAL-005.

- Section 3.7. Two bullets regarding Tie Lines edited to address concerns with BAL-005 and align with Section 5 edit.
- Section 3.8. Additional time restrictions on outages including PJM model build days, holidays and other major critical events.
- Section 4.1. Communications expanded to specifically include external entities and non-member internal entities in addition to PJM Members. Delete of text box describing language and communications (redundant with Section 4.5).
- Section 4.3.3. Removed. Section 4.5 replaces the content.
- Section 4.5.5, 4.5.6. Now refer to 4.5.2 for operators required to complete training.
- Section 4.5.2, 4.5.6. Applicable persons expanded to include member company dispatchers (was only operators before).
- Section 5. Metering Requirements update and restructuring. Clearer breakdown by types of meters. Better separation between operations and billing meters. Clarifications on topics such as accuracy, maintenance, and applicability. Added official detailed definition of Tie Line subtypes. Revised “grandfather clause” for rewritten requirements that can be reasonably construed as new.

Revision 32 (03/31/2016):

- Updated references to GMS, Generation Management System, to VBUCC, Virtual Backup Control Center
- Updated references to Test System or Test Environment to Stage System or Stage Environment as appropriate.
- Section 1.2 changed from a description of GMS to a description of VBUCC.
- Standardized all references to “PJMNET” or “PJMNet” to “PJMnet”.
- 2.3.1, removed reference to manual failovers.
- 2.3.6, removed references to the PJM ICCP Network Interface Control Document, PJM ICCP Communications Workbook and PJM ICCP NICD and Workbook.
- 2.5.6, spelling and typo fixes.
- 3.2.2, removed mention of PJM support for ICCP block 4 messages, which are not presently supported.
- 3.2.2, removed references to the PJM ICCP Network Interface Control Document, PJM ICCP Communications Workbook and PJM ICCP NICD and Workbook.
- 3.2.3, removed reference to accumulated energy values as an EMS Data Exchange.
- 3.2.4, updated reference to frame relay with MPLS networking technology. Removed dated reference to PVC’s. Replaced requirement to return “Welcome Letter” with kickoff conference.
- Attachment C: Notification of Member Company System Outages deleted – content updated and migrated under Section 3.8.

- Attachment D: PJM EMS Networking Rapid Response Team deleted – content updated and migrated under Section 3.8.
- Attachment C: PJMnet ICCP Failover Tests added.
- Section 3.8, Planning, Coordination and Notification of System Changes and Events added.
- Section 3.8.1, Regular Planned Member Company System Outages added.
- Section 3.8.2, Emergency and Unscheduled System Outages added.
- Section 3.8.3, Communication of Major System Changes and Events added.
- Section 3.8.4, Outage Tracking added.
- Administrative Change – updated references for eFTR to FTRCenter.

Revision 31 (11/18/2015):

- All references to “eMkt” or “eMarket” replaced with “Markets Gateway” consistent with new branding of new market application.
- Section 2.4, two requirements added to list for voice communications.
- Section 4, Interpersonal Communication introductory paragraph added, and introduction of “Interpersonal Communication” as term for voice communications consistent with NERC terminology.
- Section 4.2., new section called Alternative Interpersonal Communication Capability added, with Satellite Telephones as main method.
- Business Voice System and Cellular Telephones put under new section 4.3 Additional Methods.
- Section 4.4, new section and requirements regarding requirements during failure of communication capabilities.
- Section 3.1, removed reference to floppy disks.
- Periodic Review

Revision 30 (07/29/2015):

- Replaced references to retired Manual 4 in sections 1.8, 2.2, and 3.4 with the OASIS User Guide.
- Changed email address for phasor outages in section 3.3.2 Synchrophasor Data Exchange
- Added ICCP Object ID requirements to Section 5.3.5 Tie Line Telemetry Specification and Requirements
- Added monitoring of LTC tap setting in Section 3.6 Real-Time Analysis Monitoring Requirements for System Security
- Removed requirement for Status Data, Transformer Fixed Tap Settings (No-Load), in Section 3.6 Real-Time Analysis Monitoring Requirements for System Security.

- Added an entry for TO GeoMagnetic Disturbance (GMD) data submittal to the table in Appendix B: Schedule of Data Submittals.

Revision 29 (12/18/2014):

- Added additional language and links to the bottom of Section 3.2.4 “PJMnet Communications System”

Revision 28 (11/07/2014):

- Added new Section 4.3 on PJM Communication Protocol in accordance with COM-002-4

Revision 27 (06/26/2014):

- Section 1, Add PJM Synchrophasor System to the list of PJM systems.
- Section 1.3, Definition of PJM Synchrophasor System.
- Section 2.2, Add PJM Synchrophasor data exchange to the list of PJM member data exchange service.
- Section 3.3, New section of PJM Synchrophasor System data exchange requirement
- Section 3.2.4. Added clarification for PJMnet connections for TO’s. Also referenced availability requirements in Manual 14d.

Revision 26 (04/11/2014):

- Two of the eSuite Applications have been renamed. Moving forward ESS will be known as ExSchedule and eMTR will be known as Power Meter.

Revision 25 (09/26/2013):

- Major changes to Section 5.3.5 Tie Line Telemetry Specification to provide more detailed requirements for Tie Line Telemetry.
- Miscellaneous changes to support Section 5.3.5 (minor change to 5.3, deleted 5.3.7)
- Changed numbering for sections 5.5 through 5.7 to make them subsections under Section 5.4 Meter Accuracy Standards.
- Major changes to Attachment B to remove redundant text and streamline table. EOP-005-2 and EOP-008-1 requirements updated in the table.

Revision 24 (08/01/2013):

- Added Section on 2.5.7 - Disclosure of EMS Data to Transmission Owners
- 3.2.3 Modified to clarify if manual approach is impractical
- 4.2.4 Modified keypad selection
- Attachment A - added reference for PJM related applications to inputs and outputs; added additional items per member input

Revision 23 (06/01/2013):

- Revisions for Curtailment Service Provider (CSP) dispatch instruction two way web service communications. (Section 1.9)

Revision 22 (2/28/2013):

- Administrative Change: Updated all references of “eSchedules” to “InSchedules”

Revision 21 (04/26/2012):

- Removed references to BUCC throughout the Man.
- Section 1 – Added eLRS, SCED, and removed UDS and HIS due to AC2 Implementation
- Added CFE (Communications Front End)
- HIS is still in the AC2 EMS, but it will not be used due to PJM’s preference to PI for visualizations.
- Modes of Operation Options listed
- EMS Support Systems Listed
- 1.1 Changes due to BUCC Elimination and AC2 Implementation
- 1.2 Removed SCADA, added GMS
- 1.3 Data Historian replaced with PI due to AC2 implementation
- 1.9 Added eLRS
- 2.2 Added ref for Planning section
- 2.3.1 Clarified unknown state to match Man 3.
- 2.5.1 Removed reference to Coal Pollution
- 2.5.6 Removed references to BUCC and added AC1 and AC2
- Clarified Gen Owners design (removed “multiple” and added AC1, AC2, Man, and GMS)
- 2.7 Added PJM requirement to monitor system during transition to B/U facility
- 3.2.1 Changed Frame Relay to MPLS
- 3.2.4 Added MPLS and removed ref to Back Up
- 3.3.2 Added MPLS
- 3.4 AC2 Clarity for “Backup”
- 4.2.3 Removed references to Customer Relations Dept.
- 5.5 Changed para ref for Billing Meters
- 5.8.3 Replaced UDS with SCED
- Attach “B” – Added EOP 008 R1.5 to Table,
- Attch “B” – Changed ref for TO Backup Capability Plan
- Attch “C” – Clarified RTU outage reporting (24 hrs to 1 day for consistency)

Revision 20 (03/15/2011):

- 2.3.1 – Added 30 minute time limit to notification.
- 2.5.6 – Added Member TO training responsibilities and EMS configuration changes
- 5.8.1 – Added requirement for BA annual check of Fqcy and Time Error meters
- Attch B – Added months for submittals and changed Ref's for Tie Line meter checks. Reference cleanup.
- 3.5 – corrected typo for acquisition frequency
- 5.7 – added clarity to percentages
- Changed "Self Certification" to Submittals Attch "B"
- Added Table to Attch "B"

Revision 19 (03/15/2011):

- Sections 1 & 2 – Updated references to Manuals
- 2.3.1 – Clarified member TO requirements for security analysis capability
- 2.4 – Clarified 3 part communication
- 2.7 – Clarified back up capability
- 4.2.4 – Clarified 3 part communication
- 5.8.1 – Updated references to Manuals
- Attch A, H2 – Removed MAAC
- Attch C5 – Clarified process.

Revision 18 (01/24/2011):

- Added reference to Manual 40 in section 2.6
- Revision to 2.7 – changed 2 hours to 1 hour (EOP-008)
- Revisions to 4.2.4 for 3 part communications

Revision 17 (01/01/2010):

- Corrected section 2.7 from PJM EMS to transmission owner EMS and clarified timing requirement – within 2 hours
- Updated Section 3.2.3 changing 500 kV to 345 kV
- Updated language in section 4.2.4 to include a PJM definition of Directives
- Updated section 5.3.3 – generators (less than 500 kV) can be metered from high side or low side of GSU.
- Updated tables in Attachment A
- Added Attachment C – notification for system outages affecting telecommunications to include EMS and State Estimator outages.

Correction made January 4, 2010 to fix subsection numbering in section 4.2 and the table of contents.

Revision 16 (10/05/2009):

- Removed Attachment B – Nuclear Protocols – will be contained in M39 to be published 10/1/09
- Added Attachment B – Annual Data Submissions for Transmission Owners
- Added Section 2.7 – Backup Capability Requirements for Transmission Owners
- Updated language in Section 4.2.3 for 3 part communications and use of the term "directives"

Revision 15 (06/01/2009):

- PJM has conducted the 2009 annual review and update based on this effective date

Revision 14 (05/09/2008):

- 3 part communications guidance
- Annual review and update of complete manual for 2008.

Revision 13 (05/15/07):

- Section 2: Control Center Requirements
  - Moved Training and Certification requirements to new Manual M40 Certification and Training Requirements.
- Section 3: Communications & Data Exchange Requirements
  - Provided language related to data communication outages and reporting.
  - Provided additional clarity regarding satellite phone requirements.
- Attachment C: PJM System Operator Training Requirements
  - Moved to new Manual M40 Certification and Training Requirements
- Attachment D: Continuing Education Hour (CEH) Tracking Process
  - Moved to new Manual M40 Certification and Training Requirements.
- Introduction trimmed to eliminate redundant information.
- List of PJM Manuals exhibit removed, with directions given to PJM Web site where all the manuals can be found.
- Section 4: Meter Accuracy Standards permanently moved to the end of the manual.

Revision 12 (09/13/06):

- Section 2: Control Center Requirements
  - Provided additional clarity regarding "Backup Recovery Procedures."
- Attachment C: PJM System Operator Training Requirements

  - Added more details to compliance monitoring, levels and process for noncompliance.
- Attachment D: Continuing Education Hour (CEH) Tracking Process
  - Made revisions to reporting forms.

Revision 11 (06/19/06):

- Attachment C: PJM System Operator Training Requirements
  - Added Training Requirements for Demand Resources providing Ancillary Services.
  - Deleted obsolete paragraph on page 79 regarding certification of incumbent system operators.
- Section 1 (PJM Systems), Page 8: Removed word “analog”.

Revision 10 (02/07/06):

- Added Attachment D: Continuing Education Hour (CEH) Tracking
- Added provision to maintain PJM System Operator Certification through CEH’s to Attachment C.
- Miscellaneous minor revisions to correct current naming of Member Training offerings, and references to NERC policies.
- Revisions were made on the following pages: 20-22, 27, 39, 54, 57, 62, 69, 80-83, 86-89, 91 and 102-118.

Revision 09 (9/01/05):

- Added Attachment C: PJM System Operator Training Requirements.
- Added Nuclear Power Plant voltage notification.

Revision 08 (1/01/05):

- Miscellaneous member comments and reflect the retirement of the Back Up Analog Control System.

Revision 07 (5/15/04):

- Miscellaneous member comments, not incorporated in Revision 6
- Updated PJM List of Manuals

Revision 06 (3/31/04):

- Added descriptions of the Generation Management System (GMS), the Process Control Test (PCT) System, the Back-Up Control Center () System, the PJM SCADA System, the OSI PI Data Historian System and clarified member obligations for ICCP communications including data integrity requirements and transmission monitoring requirements.

Revision 05 (12/31/03):

- Added Attachment B: Nuclear Plant Communications Protocol, December 17, 2003

Revision 04 (05/01/03):

- Revised Section 3: Communications & Data Exchange Requirements. Updated to include satellite phone requirements for generation operator control centers.

Revision 03 (04/04/03):

- Complete revision of manual to reflect PJM Standards and Systems.

Revision 02 (12/31/00):

- Removed Attachment A: Definitions and Abbreviations. Attachment A is being developed into a ‘new’ PJM Manual for ***Definitions and Acronyms (M35)***.

Revision 01 (04/01/98):

- Attachment B: Information Access Matrix
- Exhibit B.7: Grid Accounting Services revised to change "Market Clearing Price" to "Locational Marginal Price."

Revision 00 (07/30/97):

- This revision is the preliminary draft of the PJM Manual for *Control Center Requirements*.