Generation Interconnection Feasibility Study Report

For

PJM Generation Interconnection Request Queue Position W3-025

Wrightstown 34.5kV

March 2011

Preface

The intent of the feasibility study is to determine a plan, with ballpark cost and construction time estimates, to connect the subject generation to the PJM network at a location specified by the Interconnection Customer. The Interconnection Customer may request the interconnection of generation as a capacity resource or as an energy-only resource. As a requirement for interconnection, the Interconnection Customer may be responsible for the cost of constructing: (1) Direct Connections, which are new facilities and/or facilities upgrades needed to connect the generator to the PJM network, and (2) Network Upgrades, which are facility additions, or upgrades to existing facilities, that are needed to maintain the reliability of the PJM system.

In some instances a generator interconnection may not be responsible for 100% of the identified network upgrade cost because other transmission network uses, e.g. another generation interconnection, may also contribute to the need for the same network reinforcement. The possibility of sharing the reinforcement costs with other projects may be identified in the feasibility study, but the actual allocation will be deferred until the impact study is performed.

The Feasibility Study estimates do not include the feasibility, cost, or time required to obtain property rights and permits for construction of the required facilities. The project developer is responsible for the right of way, real estate, and construction permit issues. For properties currently owned by Transmission Owners, the costs may be included in the study.

General

The Interconnection Customer (IC), has proposed a solar generating facility located in Wrightstown, New Jersey. The installed facilities will have a total capability of 2.06 MW with 0.0 MW of this output being recognized by PJM as capacity. This means that the remaining 2.06 MW will be curtailable should a system reliability constraint occur.

Point of Interconnection

W3-025 will interconnect with the Jersey Central Power & Light system along the 12.47kV circuit #67278 from the New Lisbon substation.

© PJM Interconnection 2011. All rights reserved.

First Energy Analysis and Results

Local Distribution Circuit Information

This area is presently served by New Lisbon circuit 67278, a 12.47kV multi-grounded wye distribution circuit originating from JCP&L's New Lisbon substation.

Circuit protection and co ordination

Main Line

The existing 100K protective fuses on the three phase overhead primary line to the facility will be upgraded to 140K to accommodate the proposed 2 MW solar generation on the 12.5kV distribution system. (2) Capacitor locations on the line serving the PV facility will require the addition of programmable capacitor control with voltage override control. Controls are needed to assist in voltage and VAR regulation in the area of the PV facility. Distribution line regulators are not present on this circuit between the IC (Interconnection Customer) and the JCP&L substation. Voltage regulation on this circuit is currently provided within tariff limits by a transformer load tap changer on Bank 1 at New Lisbon substation.

One set of 600A sectionalizing switches will be required on the New Lisbon Substation side of the IC's main line lateral tap in order to transfer the customer generation to the adjacent McGuire 67412 circuit during maintenance and emergency events.

At Substation

JCP&L will replace three existing (3) electro-mechanical relay panels with SEL-351 electronic relays on 2 distribution circuits and on the transformer bank at New Lisbon substation. JCP&L will remove the existing relays and wiring, provide cabling, test switches, auxiliary relays and conduit.

At PV Facility

SCADA control system for the breaker will be designed by the customer, and must be approved by JCP&L/FirstEnergy prior to purchase. Typically, these systems utilize fiber optic or leased phone line. The SCADA control system must communicate with our RDO dispatch center located in Morristown, NJ.

The customer must install and maintain the SCADA control system equipment. Equipment needed inside JCP&L facilities may be installed by JCP&L personnel. Periodic testing of the system will be required and the system must be configured to fail in a 'trip' condition- i.e. upon loss of communications, the system must trip the generator off line.

Distributed Generation must not interfere with the proper detection and clearing of faults on the First Energy system.

© PJM Interconnection 2011. All rights reserved.

Additional Requirements

- JCP&L will work with the IC to determine the exact Point Of Interconnection (POI) based on existing infrastructure layout.

- IC will install a pole adjacent to JCP&L's new tap pole, as POI. On this pole, the IC will install cutout fuses with load break capability and primary metering transformers bracket per the FirstEnergy Construction Standards, Page No. 10-347. JC&L will purchase and install the revenue metering CTs and PTs. JCP&L will provide the ratio and accuracy specifications based on the IC load and generation levels

- IC provides all trenching, cables and conduit to connect his PV generation facilities into the Point of Interconnection (POI) pole.

- IC must meet all applicable JCP&L/FE standards and requirements which are included in the current JCP&L Tariff for Electric Service.

- IC's inverter-based generation must be UL listed or certified to comply with the requirements of IEEE 1547. JCP&L will require a witness test of this functionality.

- **IC's main breaker shall have an SEL 351 electronic relay which is required for interconnection protection. The main breaker must be on the high side of the IC's transformer. All equipment, breakers, lightning protection, etc., should meet JCP&L/FE's minimum BIL Ratings.**

- The IC's transformer must be grounded Wye to grounded Wye.

- JCP&L shall specify a schedule of appropriate power factor settings for the IC inverters.

- IC must meet the requirements of N.J.A.C. 14:4-9 ("In front of meter" all power sold to PJM and interconnection standards for Class I Renewable Energy Systems.

- IC must maintain reactive power capability sufficient to maintain a composite power delivery for the facility at the interconnection point at a power factor between .95 leading and .90 lagging. If this capability cannot be provided by the solar units, a dynamic device such as a STATCOM or SVC must be installed at the project substation at the customer's cost.

© PJM Interconnection 2011. All rights reserved.

Network Impacts

Queue project W3-025 was studied as a(n) 2.06 MW (0.0 MW of which was Capacity) injection into JCPL's system at the New Lisbon 34.5 kV substation. Project W3-025 was evaluated for compliance with reliability criteria for summer peak conditions in 2014.

Potential transmission network impacts are as follows:

Generator Deliverability

(Single or N-1 contingencies for the Capacity portion only of the interconnection)

No violations identified.

Multiple Facility Contingency

(Double Circuit Tower Line contingencies only with full energy output. Stuck Breaker and Bus Fault contingencies will be applied during the Impact Study)

No violations identified.

Contribution to Previously Identified Overloads

(This project contributes to the following contingency overloads, i.e. "Network Impacts", identified for earlier generation or transmission interconnection projects in the PJM Queue.)

No violations identified.

New System Reinforcements

(Upgrades required to mitigate reliability criteria violations, i.e. "Network Impacts", initially caused by the addition of this project generation.)

None required.

Contribution to Previously Identified System Reinforcements

(Overloads initially caused by prior Queue positions with additional contribution to overloading by this project. This project may have a % allocation cost responsibility which will be calculated and reported for the Impact Study.)

None required.

Short Circuit

Not required.

© PJM Interconnection 2011. All rights reserved.

Energy Portion of Interconnection Request

PJM also studied the delivery of the energy portion of the surrounding generation. Any potential problems identified below are likely to result in operational restrictions to the project under study. The developer can proceed with network upgrades to eliminate the operational restriction at their discretion by submitting a Transmission Interconnection request. Note: Only the most severely overloaded conditions are listed. There is no guarantee of full delivery of energy for this project by fixing only the conditions listed in this section. With a Transmission Interconnection Request, a subsequent analysis will be performed which analyzes all overload conditions associated with the overloaded element(s) identified. As a result of the aggregate energy resources in the area, the following violations were identified.

No violations identified.

© PJM Interconnection 2011. All rights reserved.

Infrastructure Upgrade Estimated Costs (By JCP&L)

Total Estimated Costs (by JCP&L) is $293,500.00

- Approximate cost to install one span of three phase conductor, one new tap pole, one set 100K fuses or solid cut-outs, one set 600A sectionalizing switches on an existing pole, and two capacitor bank time/voltage override controllers. $44,500 non-refundable.
- Substation upgrade cost is $ 218,000.00 non-refundable.
- Metering costs is $23,000.00 based on us installing and owning the equipment.
- Communication costs of installing SCADA system into our RDO center is $8,000.00 Non-refundable.
- Note: The above costs do not include taxes. If appropriate, this could add approximately an additional 36% to the Project cost.
- All JCPL costs are not subject to refundable provisions of the NJ-BPU Tariff for Electric service
- **This price is based on 2012 and 2013 labor costs and material costs. If project has work performed in 2014 additional escalation costs could occur.**

Note - this is an estimate based on similar work orders previously worked by JCP&L for the types of work described in the analysis above. Should the customer want to proceed with the connection of this facility a contract with JCPL will be developed based on these costs and a true-up of actual charges will be made at the completion of the project

Timetable for Construction:

Total time to complete this project is 10-11 months from receipt of "Interconnect Agreement", "Construction Agreement" and receipt of "Estimated Project Costs".

JCP&L estimates 4 months after receipt of above for design work to be completed.

JCP&L estimates it will require an additional 6-7 months to complete the identified infrastructure upgrades.

© PJM Interconnection 2011. All rights reserved.

Attachment 1
Single Line Diagram

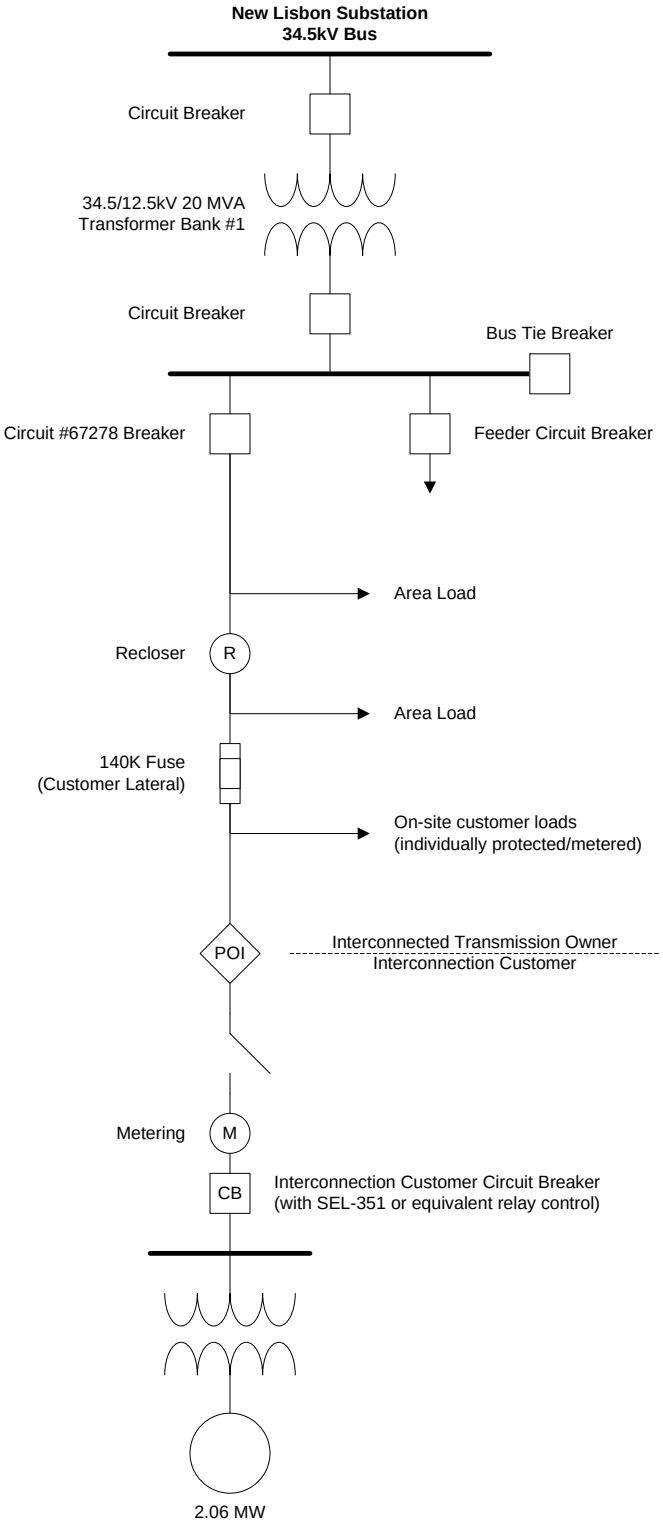

© PJM Interconnection 2011. All rights reserved.