Generation Interconnection Feasibility Study Report

For

PJM Generation Interconnection Request Queue Position W4-081

Whiting 34.5kV

April 2011

Preface

The intent of the feasibility study is to determine a plan, with ballpark cost and construction time estimates, to connect the subject generation to the PJM network at a location specified by the Interconnection Customer. The Interconnection Customer may request the interconnection of generation as a capacity resource or as an energy-only resource. As a requirement for interconnection, the Interconnection Customer may be responsible for the cost of constructing: (1) Direct Connections, which are new facilities and/or facilities upgrades needed to connect the generator to the PJM network, and (2) Network Upgrades, which are facility additions, or upgrades to existing facilities, that are needed to maintain the reliability of the PJM system.

In some instances a generator interconnection may not be responsible for 100% of the identified network upgrade cost because other transmission network uses, e.g. another generation interconnection, may also contribute to the need for the same network reinforcement. The possibility of sharing the reinforcement costs with other projects may be identified in the feasibility study, but the actual allocation will be deferred until the impact study is performed.

The Feasibility Study estimates do not include the feasibility, cost, or time required to obtain property rights and permits for construction of the required facilities. The project developer is responsible for the right of way, real estate, and construction permit issues. For properties currently owned by Transmission Owners, the costs may be included in the study.

General

The Interconnection Customer (IC), has proposed a solar generating facility located in Flemington, New Jersey. The installed facilities will have a total capability of 2.0 MW with 0.0 MW of this output being recognized by PJM as capacity. This means that the remaining 2.0 MW will be curtailable should a system reliability constraint occur. The proposed in-service date for this project is October 2011. **This study does not imply a First Energy commitment to this in-service date.**

Point of Interconnection

W4-081 will interconnect with the Jersey Central Power & Light system at the 34.5kV circuit #69287 from the Whiting substation.

© PJM Interconnection 2011. All rights reserved.

First Energy Analysis

This area is presently served by Distribution circuit 69287, a 3 phase 34.5 Kv grounded Wye distribution circuit originating from JCP&L's Whiting substation.

Circuit Protection and Coordination:

Main Line:

To accommodate the proposed 2.0 MW capacity on the 34.5 kV distribution system, JCP&L will add a second and third phase conductor of #2 ACSR to approximately 1000 feet of overhead line, add a third phase conductor of #2 ACSR to approximately 10,500 feet of overhead line, install a new tap pole, 40-k protective fuses off main line, replace (1) existing fixed capacitor bank with a programmable control capable of voltage over ride during light load.

At Substation:

JCP&L will replace one (1) existing electro-mechanical relays with SEL-351 electronic relays on one (1) distribution circuit at Whiting substation. JCP&L will remove the existing relays and wiring, provide cabling, test switches, auxiliary relays and conduit.

At PV Facility:

SCADA control system for the breaker will be designed by the customer, and must be approved by JCP&L/FirstEnergy prior to purchase. Typically, these systems utilize fiber optic or leased phone line. The SCADA control system must communicate with JCP&L RDO dispatch center located in Morristown, N.J. (at 300 Madison Ave).

The customer must install and maintain the SCADA control system equipment. Equipment needed inside JCP&L facilities may be installed by JCP&L personnel. Periodic testing of the system will be required and the system must be configured to fail in a 'trip' condition, i.e., upon loss of communications, the system must trip the generator off line.

Distributed Generation must not interfere with the proper detection and clearing of faults on the First Energy system.

© PJM Interconnection 2011. All rights reserved.

Network Impacts

Queue project W4-081 was studied as a(n) 2.0 MW (0.0 MW of which was Capacity) injection into JCPL's system at the WHITINGS 34.5 kV substation. Project W4-081 was evaluated for compliance with reliability criteria for summer peak conditions in 2014.

Potential transmission network impacts are as follows:

Generator Deliverability

(Single or N-1 contingencies for the Capacity portion only of the interconnection)

No violations identified.

Multiple Facility Contingency

(Double Circuit Tower Line contingencies only with full energy output. Stuck Breaker and Bus Fault contingencies will be applied during the Impact Study)

No violations identified.

Contribution to Previously Identified Overloads

(This project contributes to the following contingency overloads, i.e. "Network Impacts", identified for earlier generation or transmission interconnection projects in the PJM Queue.)

No violations identified.

New System Reinforcements

(Upgrades required to mitigate reliability criteria violations, i.e. "Network Impacts", initially caused by the addition of this project generation.)

None required.

Contribution to Previously Identified System Reinforcements

(Overloads initially caused by prior Queue positions with additional contribution to overloading by this project. This project may have a % allocation cost responsibility which will be calculated and reported for the Impact Study.)

None required.

Short Circuit

(Report over-dutied breakers.)

None required.

Energy Portion of Interconnection Request

PJM also studied the delivery of the energy portion of the surrounding generation. Any potential problems identified below are likely to result in operational restrictions to the project under

© PJM Interconnection 2011. All rights reserved.

study. The developer can proceed with network upgrades to eliminate the operational restriction at their discretion by submitting a Transmission Interconnection request.

Note: Only the most severely overloaded conditions are listed. There is no guarantee of full delivery of energy for this project by fixing only the conditions listed in this section. With a Transmission Interconnection Request, a subsequent analysis will be performed which analyzes all overload conditions associated with the overloaded element(s) identified. As a result of the aggregate energy resources in the area, the following violations were identified.

No violations identified.

© PJM Interconnection 2011. All rights reserved.

Additional Requirements:

- JCP&L will work with the IC to determine the exact Point Of Interconnection (POI) based on existing infrastructure layout.

- Interconnect Customer (IC) will install a pole adjacent to JCP&L's pole as point of interconnection. On this pole the IC will install fused cutouts with load break capability, primary metering transformer bracket per the FE Construction Standards of page# 10-347. JCP&L will install and purchase the revenue metering CTs and PTs. which is based on the ratio and accuracy specifications of the customer load and generation levels. This cost is paid by the customer.

- IC provides all trenching, cables and conduit to connect his PV generation facilities into the Point of Interconnection (POI) pole.

- IC must meet all applicable JCP&L/FE standards and requirements which are included in the current JCP&L Tariff for Electric Service.

- IC's inverter-based generation must be UL listed or certified to comply with the requirements of IEEE 1547. JCP&L will require a witness test of this functionality.

- **IC's main breaker shall have an SEL 351 electronic relay which is required for interconnection protection. The main breaker must be on the high side of the IC's transformer. All equipment, breakers, lightning protection, etc., should meet JCP&L/FE's minimum BIL Ratings.**

- IC must take the generator offline when requested by JCP&L / FE for emergency circuit repairs or similar activities

- The IC's transformer must have a grounded Wye connection to the Utility .

- JCP&L shall specify a schedule of appropriate power factor settings for the IC inverters.

- IC must meet requirements of N.J.A.C. 14:4-9 ("In front of meter" all power sold to PJM and interconnection standards for Class I Renewable Energy Systems), as well as IEEE 1547, and IEEE 1547.1

- IC must maintain reactive power capability sufficient to maintain a composite power delivery for the facility at the interconnection point at a power factor between .95 leading and .90 lagging. If this capability cannot be provided by the solar units, a dynamic device such as a STATCOM or SVC must be installed at the project substation at the customer's cost.

- **No environmental review was conducted as part of this cost estimate. If environmental review, fieldwork and permitting is needed an additional 25k (plus gross up) will be added** to the estimate. Also, it is assumed that the Developer will obtain all required environmental permits for Developer facilities up to the POI.

© PJM Interconnection 2011. All rights reserved.

Infrastructure Upgrade Estimated Costs (By JCP&L):

Total Estimated Costs (by JCP&L) is $1,388,560.00

- Approximate cost to install one span of three phase #2 ACSR conductor , one new tap pole, 40-K fuses at the point of interconnection, and replace one fixed capacitor bank with voltage over-ride, Add a second and third phase conductor of #2 ACSR to approximately 1000 feet of overhead line, add a third phase conductor of #2 ACSR to approximately 10,500 feet of overhead line is $1,217,200.00 .
- Substation upgrade cost is $127,568.00 .
- Metering costs is $31,280.00 based on us installing and owning the equipment.
- Communication costs of installing SCADA system into JCP&L"s RDO center is $12,512.00.
- **Note: The above costs include estimated applicable taxes.**
- **If, in the future, JCP&L changes it's voltage on this circuit due to upgrading to a higher voltage, the developer is responsible for any needed conversions to maintain their generation connection to JCP&L's system, i.e., new transformation and associated costs.**
- **All JCPL costs are not subject to refundable provisions of the NJ-BPU Tariff for Electric service**
- **This price is based on (2012 and 2013) labor costs and material costs. If project has work performed in (2014) additional escalation costs could occur.**

Note - This is an estimate based on similar work orders previously worked by JCP&L for the types of work described in the analysis above. It is accurate to within plus or minus 50 percent. Should the customer want to proceed with the connection of this facility, a contract with JCP&L will be developed based on these costs and a true-up of actual charges will be made at the completion of the project.

Timetable for Construction:

Total time to complete this project is (20-22) months from receipt of "Interconnect Agreement", "Construction Agreement" and receipt of "Estimated Project Costs".

JCP&L estimates (8) months after receipt of above for design work to be completed.

JCP&L estimates it will require an additional (12-14) months to complete the identified infrastructure upgrades.

© PJM Interconnection 2011. All rights reserved.

Attachment 1
Site View

© PJM Interconnection 2011. All rights reserved.

Attachment 2
Single Line Diagram

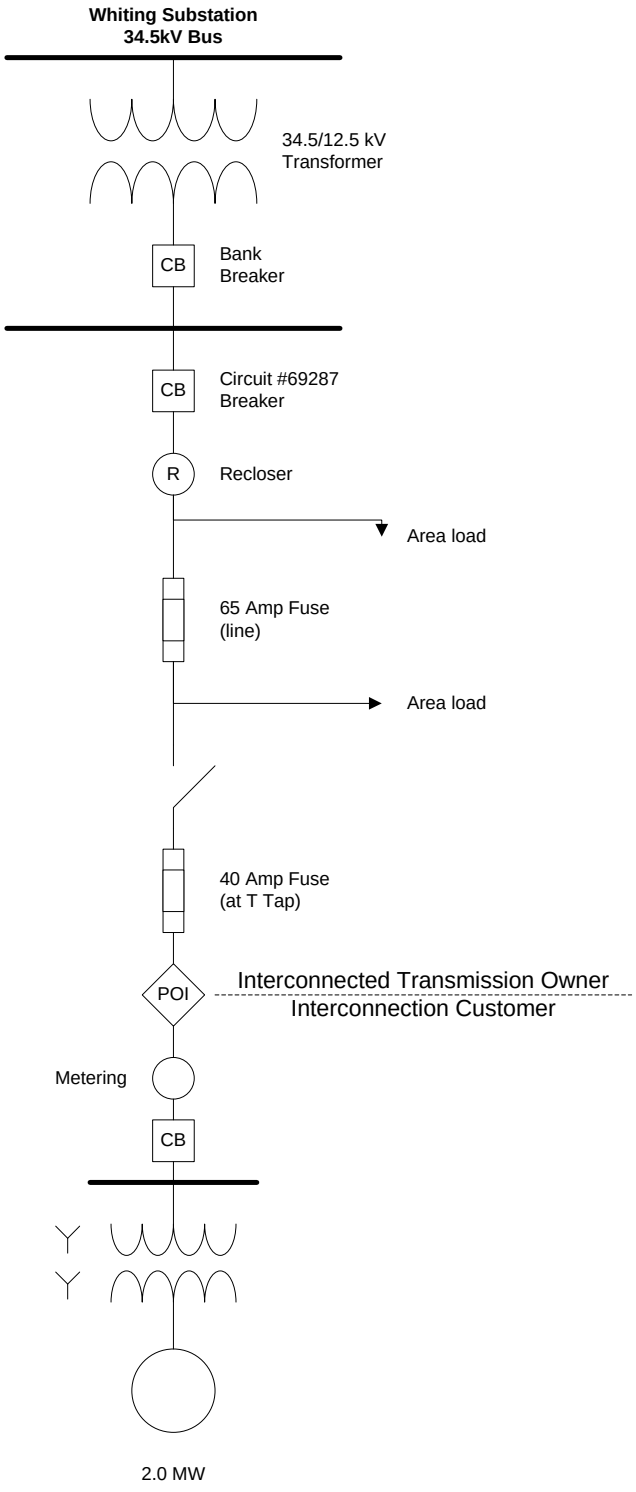

© PJM Interconnection 2011. All rights reserved.