PJM Interconnection, L.L.C.
2750 Monroe Boulevard
Audubon, PA 19403

Salvia Yi
Counsel
T: (484) 501-4619
Salvia.Yi@pjm.com

June 7, 2024

The Honorable Debbie-Anne Reese, Acting Secretary
Federal Energy Regulatory Commission
888 First Street, N.E.
Washington, D.C. 20426

Re: PJM Interconnection, L.L.C., Docket No. ER24-2215-000
Original Generation Interconnection Agreement, Service Agreement No. 7256; Project Identifier No. AE2-139

Dear Acting Secretary Reese:

Pursuant to section 205 of the Federal Power Act,[1] part 35 of the Federal Energy Regulatory Commission's ("Commission") regulations,[2] and PJM's Open Access Transmission Tariff, Part VII ("Tariff"), PJM Interconnection, L.L.C. ("PJM") submits for filing an executed Generation Interconnection Agreement ("GIA") among PJM, Bradford Solar LLC ("Project Developer" or "Bradford Solar"), and Mid-Atlantic Interstate Transmission, LLC ("Transmission Owner" or "MAIT") (collectively, the "Interconnection Parties") (the "Bradford Solar GIA").[3] PJM requests an effective date of May 8, 2024 for the Bradford Solar GIA, designated as Original Service Agreement No. 7256.

[1] 16 U.S.C. § 824d.

[2] 18 C.F.R. part 35.

[3] Because the Bradford Solar GIA filed electronically with this transmittal letter contains electronic signatures and not the original signatures of the Parties, a copy of the sheet containing the original signatures is included as Attachment B to this transmittal letter. The Bradford Solar GIA also contains Appendices 1 and 2. Appendix 1 contains all of the definitions from Tariff, Part VII, Subpart A, section 300. Appendix 2 contains all of the standard terms and conditions set forth in PJM's Form of Generation Interconnection Agreement Combined with Construction Service Agreement in Tariff, Part IX, Subpart B. PJM compiled the appendices attached to the Bradford Solar GIA from a version of the Tariff in effect as of the requested effective date of the Bradford Solar GIA.

PJM submits the Bradford Solar GIA for filing because, as described in more detail below and shown in redlines in Attachment C to this transmittal letter, the Bradford Solar GIA includes a Schedule of Charges and provisions that do not conform to the Form GIA in Tariff, Part IX, Subpart B.

I. DESCRIPTION OF THE BRADFORD SOLAR GIA

The Bradford Solar GIA facilitates the interconnection to the Transmission System[4] 100.5 megawatts ("MW") of Maximum Facility Output ("MFO") at the Bradford Solar Generating Facility located in Towanda, Franklin Township, Bradford County, Pennsylvania.[5] The Bradford Solar GIA specifies that Project Developer shall have 60.3 MW of Capacity Interconnection Rights ("CIRs") at the Point of Interconnection identified in the Bradford Solar GIA.[6] The Bradford Solar GIA has a Transmission Owner Interconnection Facilities Charge of $74,550, a Network Upgrades Charge of $3,668,968, and an Option to Build Oversight Charge of $1,005,350, for a total of $4,753,841, which consists of $3,436,623 in direct labor costs, $744,398 in direct material costs, $538,216 in indirect labor costs, and $34,604 in indirect material costs.[7]

---

[4] Unless otherwise defined in this letter, all capitalized terms herein shall have the meanings set forth in the Tariff.

[5] *See* Bradford Solar GIA, Specifications, section 1.0.

[6] *See* Bradford Solar GIA, Specifications, section 2.1.

[7] *See* Bradford Solar GIA, Specifications, sections 4.1 – 4.6.

II. DESCRIPTION OF THE SCHEDULE OF CHARGES OF THE BRADFORD SOLAR GIA

The Bradford Solar GIA, Schedule E contains a Schedule of Charges describing the Monthly Charge that Project Developer will pay to Transmission Owner.[8] The Commission has accepted PJM Interconnection Service Agreements containing similar provisions, and PJM asks the Commission to do the same here.[9]

III. DESCRIPTION OF THE NONCONFORMING PROVISIONS OF THE BRADFORD SOLAR GIA

The Bradford Solar GIA includes nonconforming provisions to accommodate this interconnection.[10] Specifically, the Bradford Solar GIA includes clarifying edits and corrections to various internal cross-references that are part of PJM's Form of Generation Interconnection Agreement Combined with Construction Service Agreement.[11] These corrections are memorialized in the replacement pages initialed by the Interconnection Parties and included in this filing.[12] These changes have been agreed to by the Interconnection Parties, provide important

---

[8] *See* Bradford Solar GIA, Schedule E. Redlined pages showing the Schedule of Charges are contained in Attachment C to this transmittal letter.

[9] *See PJM Interconnection, L.L.C.*, Letter Order, Original Service Agreement No. 6182, Docket No. ER21-2928-000 (Nov. 19, 2021); *PJM Interconnection, L.L.C.*, Letter Order, Original Service Agreement No. 6108, Docket No. ER21-2427-000 (Sept. 10, 2021); *PJM Interconnection, L.L.C.*, Letter Order, Original Service Agreement No. 5887, Docket No. ER21-1045-000 (March 23, 2021); *PJM Interconnection, L.L.C.*, Letter Order, Original Service Agreement No. 5686, Docket No. ER20-2514-000 (Sept. 24, 2020).

[10] Redlined pages showing the nonconforming provisions are contained in Attachment C to this transmittal letter.

[11] Tariff, Part IX, Subpart B.

[12] PJM is addressing the changes pertaining to the *pro forma* GIA outlined in the attached replacement pages through PJM's Governing Document Enhancement & Clarification Subcommittee ("GDECS") process and subsequent filing(s) with the Commission. Certain changes reflected in the attached replacement pages are inapplicable to the Bradford Solar GIA.

clarifications, and will not harm or have an adverse impact on reliability. The Commission has accepted other service agreements with similar corrections, and should do so here.[13]

The nonconforming provisions described herein and shown in Attachment C to this transmittal letter are reasonable, as they accommodate this interconnection and will not adversely impact the reliability of the PJM Transmission System. The remainder of the Bradford Solar GIA is conforming.

IV. WAIVER AND EFFECTIVE DATE

PJM requests that the Commission grant any and all waivers of the Commission's rules and regulations that are necessary for acceptance of this filing and the enclosed Bradford Solar GIA. Consistent with the Commission's prior notice requirements,[14] PJM requests that the Commission grant an effective date of May 8, 2024 for the Bradford Solar GIA. This effective date is appropriate because the Bradford Solar GIA is a service agreement for which there is a form of agreement set forth in Tariff, Part IX, Subpart B, and is being filed within thirty (30) days of commencement of service under the agreement.[15]

V. DOCUMENTS ENCLOSED

In addition to this transmittal letter, PJM encloses the following:

1. Attachment A – Original GIA, Service Agreement No. 7256 (Clean Format);

---

[13] *See PJM Interconnection, L.L.C.*, Letter Order, Docket No. ER23-1043-000 (Mar. 17, 2023) (accepting, among other things, nonconforming revisions to add cross-references for clarity); *PJM Interconnection, L.L.C.*, Letter Order, Original Interconnection Service Agreement, Service Agreement No. 5691, Docket No. ER20-2533-000 (Sept. 16, 2020) (accepting, among other things, clarifying non-standard terms and conditions necessary to clarify the conditions for interim Capacity Interconnection Rights).

[14] 18 C.F.R. § 35.3(a)(2).

[15] *See* Prior Notice and Filing Requirements Under Part II of the Federal Power Act, 64 FERC ¶ 61,139 at 61,983-84 (1993).

2. Attachment B – Copy of Sheet Containing Original Signatures and Initialed Replacement Pages; and

3. Attachment C – Redlined Pages Showing Schedule of Charges and Nonconforming Provisions.

VI. CORRESPONDENCE AND COMMUNICATIONS

All notices, correspondence, and communications with respect to this filing should be directed to, and PJM asks the Secretary to include on the official service list, the following:[16]

Craig Glazer
Vice President–Federal Government Policy
PJM Interconnection, L.L.C.
1200 G Street, N.W, Suite 600
Washington, D.C. 20005
(202) 423-4743
Craig.Glazer@pjm.com

Salvia Yi
Counsel
PJM Interconnection, L.L.C.
2750 Monroe Boulevard
Audubon, PA 19403-2497
(484) 501-4619
Salvia.Yi@pjm.com

Christopher Holt
Managing Counsel
PJM Interconnection, L.L.C.
2750 Monroe Boulevard
Audubon, PA 19403-2497
(610) 666-2368
Christopher.Holt@pjm.com

[16] To the extent necessary, PJM requests waiver of Rule 203(b)(3) (18 C.F.R. § 385.203(b)(3)) to permit all of the persons listed to be placed on the official service list for this proceeding.

VII. SERVICE

PJM has served a copy of this filing on Project Developer, Transmission Owner, and the relevant state utility regulatory commissions within the PJM Region.

VIII. CONCLUSION

For the reasons set forth in this transmittal, PJM respectfully requests the Commission to accept the Bradford Solar GIA effective as of May 8, 2024.

Respectfully submitted,

By: /s/ *Salvia Yi*

Craig Glazer
Vice President–Federal Government Policy
PJM Interconnection, L.L.C.
1200 G Street, N.W, Suite 600
Washington, D.C. 20005
(202) 423-4743
Craig.Glazer@pjm.com

Salvia Yi
Counsel
PJM Interconnection, L.L.C.
2750 Monroe Boulevard
Audubon, PA 19403-2497
(484) 501-4619
Salvia.Yi@pjm.com

Christopher Holt
Managing Counsel
PJM Interconnection, L.L.C.
2750 Monroe Blvd
Audubon, PA 19403-2497
(610) 666-2368
Christopher.Holt@pjm.com

cc (via email):

Project Developer
Sonny Nguyen – Sonny.Nguyen@vesperenergy.com

Transmission Owner
Michael Thorn – mthorn@firstenergycorp.com
ajadue@firstenergycorp.com
ltynes_kunzo@firstenergycorp.com

All state utility regulatory commissions within the PJM Region

ATTACHMENT A

Original GIA, Service Agreement No. 7256
(Clean Format)

Service Agreement No. 7256

(Project Identifier #AE2-139)

GENERATION INTERCONNECTION AGREEMENT
By and Between
PJM INTERCONNECTION, L.L.C.
And
BRADFORD SOLAR LLC
And
MID-ATLANTIC INTERSTATE TRANSMISSION, LLC

Service Agreement No. 7256

GENERATION INTERCONNECTION AGREEMENT
By and Between
PJM Interconnection, L.L.C.
And
Bradford Solar LLC
And
Mid-Atlantic Interstate Transmission, LLC
(Project Identifier #AE2-139)

1.0 Parties. This Generation Interconnection Agreement ("GIA") including the Specifications, Schedules and Appendices attached hereto and incorporated herein, is entered into by and between PJM Interconnection, L.L.C., the Regional Transmission Organization for the PJM Region (hereinafter "Transmission Provider" or "PJM"), Bradford Solar LLC ("Project Developer") and Mid-Atlantic Interstate Transmission, LLC ("Transmission Owner" or "MAIT"). All capitalized terms herein shall have the meanings set forth in the appended definitions of such terms as stated in Part I of the PJM Open Access Transmission Tariff ("Tariff").

2.0 Authority. This GIA is entered into pursuant to the Generation Interconnection Procedures set forth in Part VII of the Tariff. Project Developer has requested a Generation Interconnection Agreement under the Tariff, and Transmission Provider has determined that Project Developer is eligible under the Tariff to obtain this GIA. The standard terms and conditions for interconnection as set forth in Appendix 2 to this GIA are hereby specifically incorporated as provisions of this GIA. Transmission Provider, Transmission Owner, and Project Developer agree to and assume all of the rights and obligations of the Transmission Provider, Transmission Owner, and Project Developer, respectively, as set forth in Appendix 2 to this GIA.

3.0 Generating Facility or Merchant Transmission Facility Specifications. Attached are Specifications for the Generating Facility or Merchant Transmission Facility that Project Developer proposes to interconnect with the Transmission System. Project Developer represents and warrants that, upon completion of construction of such facilities, it will own or control the Generating Facility or Merchant Transmission Facility identified in section 1.0 of the Specifications attached hereto and made a part hereof. In the event that Project Developer will not own the Generating Facility or Merchant Transmission Facility, Project Developer represents and warrants that it is authorized by the owner(s) thereof to enter into this GIA and to represent such control.

4.0 Effective Date. Subject to any necessary regulatory acceptance, this GIA shall become effective on the date it is executed by all Interconnection Parties, or, if the agreement is filed with FERC unexecuted, upon the date specified by FERC. This GIA shall terminate on such date as mutually agreed upon by the parties, unless earlier terminated in accordance with the terms set forth in Appendix 2 to this GIA. The term of the GIA shall be as provided

in section 1.3 of Appendix 2 to this GIA. Interconnection Service shall commence as provided in section 1.2 of Appendix 2 to this GIA.

5.0 Security. In accord with the GIP, Project Developer shall provide the Transmission Provider (for the benefit of the Transmission Owner) with a letter of credit from an agreed provider or other form of security reasonably acceptable to the Transmissions Provider and that names the Transmission Provider as beneficiary ("Security") in the amount of $4,753,841. Such Security can also be applied to unpaid Cancellation Costs and for completion of some or all of the required Transmission Owner Interconnection Facilities, and/or Customer-Funded Upgrades. This amount represents the sum of the estimated Costs, determined in accordance with the GIP for which the Project Developer will be responsible, less any Costs already paid by Project Developer. Project Developer acknowledges that its ultimate cost responsibility will be based upon the actual Costs of the facilities described in the Specifications, whether greater or lesser than the amount of the payment security provided under this section.

6.0 Project Specific Milestones. In addition to the milestones stated in the GIP as applicable, during the term of this GIA, Project Developer shall ensure that it meets each of the following development milestones:

6.1 Local, county, and state site permits. Project Developer must obtain all necessary local, county, and state site permits by December 15, 2025.

6.2 Acquisition of major electrical equipment. On or before December 15, 2025 Project Developer must demonstrate that it has signed a memorandum of understanding for the acquisition of all generating units and other major electrical equipment for PJM Project Identifier AE2-139.

6.3 Delivery of major electrical equipment. On or before March 15, 2026, Project Developer must demonstrate that all generating units have been delivered to Project Developer's project site.

6.4 Substantial Site work completed. On or before July 31, 2026, Project Developer must demonstrate completion of at least 20 percent of project site construction. At this time, Project Developer must submit to Transmission Owner and Transmission Provider initial drawings, certified by a professional engineer, of the Project Developer Interconnection Facilities.

6.5 Commercial Operation. On or before December 15, 2026 Project Developer must demonstrate commercial operation of all generating units in order to achieve the full Maximum Facility Output set forth in section 1.0(c) of the Specifications to this GIA. Failure to achieve this Maximum Facility Output may result in a permanent reduction in Maximum Facility Output of the Generating Facility, and if, necessary, a permanent reduction of the Capacity Interconnection Rights, to the level achieved. Demonstrating commercial operation includes achieving Initial Operation in accordance with section 1.4 of Appendix 2 to this GIA and making

commercial sales or use of energy, as well as, if applicable, obtaining capacity qualification in accordance with the requirements of the Reliability Assurance Agreement Among Load Serving Entities in the PJM Region.

6.6 Within one month following commercial operation of generating unit(s), Project Developer must provide certified documentation demonstrating that "as-built" Generating Facility or the Merchant Transmission Facilities, and Project Developer Interconnection Facilities are in accordance with applicable PJM studies and agreements. Project Developer must also provide PJM with "as-built" electrical modeling data or confirm that previously submitted data remains valid.

Project Developer shall demonstrate the occurrence of each of the foregoing milestones to Transmission Provider's reasonable satisfaction. Transmission Provider may reasonably extend any such milestone dates, in the event of delays that Project Developer (i) did not cause and (ii) could not have remedied through the exercise of due diligence. Project Developer shall also have a one-time option to extend its milestone (other than any milestone related to Site Control) for a total period of one year regardless of cause. This option may only be applied one time for an Interconnection Request, and may only be applied to one single milestone specified in this GIA. Other milestone dates stated in this GIA shall be deemed to be extended coextensively with Project Developer's use of this provision. Once this extension is used, it is no longer available with regard to any other milestones or other deadlines in this GIA. If the Project Developer fails to meet any of the milestones set forth above, including any extended milestones, its Interconnection Request shall be terminated and withdrawn, in accordance with the provisions of Appendix 2, sections 15 and 16. Transmission Provider shall take all necessary steps to effectuate this termination, including submitting the necessary filings with FERC.

7.0 Provision of Interconnection Service. Transmission Provider and Transmission Owner agree to provide for the interconnection to the Transmission System in the PJM Region of Project Developer's Generating Facility or Merchant Transmission Facility identified in the Specifications in accordance with the GIP, the Operating Agreement, and this GIA, as they may be amended from time to time.

8.0 Assumption of Tariff Obligations. Project Developer agrees to abide by all rules and procedures pertaining to generation and transmission in the PJM Region, including but not limited to the rules and procedures concerning the dispatch of generation or scheduling transmission set forth in the Tariff, the Operating Agreement and the PJM Manuals.

9.0 System Impact Study(ies) and/or Facilities Study(ies). In analyzing and preparing the Facilities Study, and in designing and constructing the Distribution Upgrades, Network Upgrades, Stand Alone Network Upgrades and/or Transmission Owner Interconnection Facilities described in the Specifications attached to this GIA, Transmission Provider, the Transmission Owner(s), and any other subcontractors employed by Transmission Provider have had to, and shall have to, rely on information provided by Project Developer and

possibly by third parties and may not have control over the accuracy of such information. Accordingly, NEITHER TRANSMISSION PROVIDER, THE TRANSMISSION OWNER(s), NOR ANY OTHER SUBCONTRACTORS EMPLOYED BY TRANSMISSION PROVIDER OR TRANSMISSION OWNER MAKES ANY WARRANTIES, EXPRESS OR IMPLIED, WHETHER ARISING BY OPERATION OF LAW, COURSE OF PERFORMANCE OR DEALING, CUSTOM, USAGE IN THE TRADE OR PROFESSION, OR OTHERWISE, INCLUDING WITHOUT LIMITATION IMPLIED WARRANTIES OF MERCHANTABILITY AND FITNESS FOR A PARTICULAR PURPOSE, WITH REGARD TO THE ACCURACY, CONTENT, OR CONCLUSIONS OF THE SYSTEM IMPACT STUDY(IES) AND/OR FACILITIES STUDY(IES) OF THE DISTRIBUTION UPGRADES, NETWORK UPGRADES, STAND ALONE NETWORK UPGRADES AND/OR TRANSMISSION OWNER INTERCONNECTION FACILITIES. Project Developer acknowledges that it has not relied on any representations or warranties not specifically set forth herein and that no such representations or warranties have formed the basis of its bargain hereunder.

10.0 Construction of Transmission Owner Interconnection Facilities and Transmission Owner Upgrades

10.1. Cost Responsibility. Project Developer shall be responsible for and shall pay upon demand all Costs associated with the interconnection of the Generating Facility or Merchant Transmission Facility as specified in the GIP. These Costs may include, but are not limited to, a Distribution Upgrades charge, Network Upgrades charge, Stand Alone Network Upgrades charge, Transmission Owner Interconnection Facilities charge and other charges. A description of the facilities required and an estimate of the Costs of these facilities are included in sections 3.0 and 4.0 of the Specifications to this GIA.

10.2. Billing and Payments. Transmission Provider shall bill the Project Developer for the Costs associated with the facilities contemplated by this GIA, estimates of which are set forth in the Specifications to this GIA, and the Project Developer shall pay such Costs, in accordance with section 11 of Appendix 2 to this GIA and the applicable provisions of Schedule L. Upon receipt of each of Project Developer's payments of such bills, Transmission Provider shall reimburse the applicable Transmission Owner. Project Developer requests that Transmission Provider provide a quarterly cost reconciliation:

___X__ Yes

_____ No

10.3. Contract Option. In the event that the Project Developer and Transmission Owner agree to utilize the Negotiated Contract Option as set forth in Schedule L, Appendix 1 to establish, subject to FERC acceptance, non-standard terms regarding cost responsibility, payment, billing and/or financing, the terms of sections 10.1 and/or 10.2 of this section 10.0 shall be superseded to the extent required to conform to

such negotiated terms, as stated in Schedule L to this GIA. The Negotiated Option can only be used in connection with a Network Upgrade subject to the Network Upgrade Cost Responsibility Agreement if all Project Developers and the relevant Transmission Owner agree.

_____ Yes

__X__ No

10.4 Interconnection Construction Terms and Conditions

10.4.1 Schedule L of this GIA sets forth the additional terms and conditions of service that apply in the event there are any there are Project Developer Interconnection Facilities, Transmission Owner Interconnection Facilities, or Transmission Owner Upgrades subject to this Agreement. In the event there is an additional Transmission Owner listed in Specification section 3.0(c), Transmission Provider, Project Developer and the additional Transmission Owner shall be required to enter into a separate Interconnection Construction Service Agreement in the form set forth in Tariff, Part IX, Subpart J. In the event there are any Common Use Upgrades listed in Specification section 3.0 of this GIA, Transmission Provider and Project Developer, along with the other relevant Project Developers, shall also be required to enter into a separate Network Upgrade Cost Responsibility Agreement in the form set forth in Tariff, Part IX, Subpart H.

10.4.2 In the event that the Project Developer elects to construct some or all of the Transmission Owner Interconnection Facilities or Stand Alone Network Upgrades under the Option to Build, billing and payment for the Costs associated with the facilities contemplated by this GIA shall relate only to such portion of the Interconnection Facilities and Transmission Owner Upgrades as the Transmission Owner is responsible for building.

11.0 Interconnection Specifications

11.1 Point of Interconnection. The Point of Interconnection shall be as identified on the one-line diagram attached as Schedule B to this GIA.

11.2 List and Ownership of Interconnection Facilities and Transmission Owner Upgrades. The Interconnection Facilities and Transmission Owner Upgrades and Transmission Owner Upgrades to be constructed and ownership of the components thereof are identified in section 3.0 of the Specifications attached to this GIA.

11.3 Ownership and Location of Metering Equipment. The Metering Equipment to be constructed, the capability of the Metering Equipment to be constructed, and the ownership thereof, are identified on the attached Schedule C to this GIA.

11.4 Applicable Technical Standards. The Applicable Technical Requirements and Standards that apply to the Generating Facility or Merchant Transmission Facility and the Interconnection Facilities and Transmission Owner Upgrades are identified in Schedule D to this GIA.

12.0 Power Factor Requirement.

Consistent with section 4.6 of Appendix 2 to this GIA, the power factor requirement is as follows:

The Generation Project Developer shall design its non-synchronous Generating Facility with the ability to maintain a power factor of at least 0.95 leading to 0.95 lagging measured at the high-side of the facility substation transformers.

13.0 Charges. In accordance with sections 10 and 11 of Appendix 2 to this GIA, the Project Developer shall pay to the Transmission Provider the charges applicable after Initial Operation, as set forth in Schedule E to this GIA. Promptly after receipt of such payments, the Transmission Provider shall forward such payments to the appropriate Transmission Owner.

14.0 Third Party Beneficiaries. No third party beneficiary rights are created under this GIA, except, however, that, subject to modification of the payment terms stated in section 10 of this GIA pursuant to the Negotiated Contract Option, payment obligations imposed on Project Developer under this GIA are agreed and acknowledged to be for the benefit of the Transmission Owner(s). Project Developer expressly agrees that the Transmission Owner(s) shall be entitled to take such legal recourse as it deems appropriate against Project Developer for the payment of any Costs or charges authorized under this GIA or the GIP with respect to Interconnection Service for which Project Developer fails, in whole or in part, to pay as provided in this GIA, the GIP and/or the Operating Agreement.

15.0 Waiver. No waiver by either party of one or more defaults by the other in performance of any of the provisions of this GIA shall operate or be construed as a waiver of any other or further default or defaults, whether of a like or different character.

16.0 Amendment. Except as set forth in Appendix 2, section 12.0 of this GIA, this GIA or any part thereof, may not be amended, modified, or waived other than by a written document signed by all parties hereto. Parties acknowledge that, subsequent to execution of this agreement, errors may be corrected by replacing the page of the agreement containing the error with a corrected page, as agreed to and signed by the parties without modifying or altering the original date of execution, dates of any milestones, or obligations contained therein.

17.0 Construction With Other Parts of The Tariff. This GIA shall not be construed as an application for service under Part II or Part III of the Tariff.

18.0 Notices. Any notice or request made by either party regarding this GIA shall be made, in accordance with the terms of Appendix 2 to this GIA, to the representatives of the other party and as applicable, to the Transmission Owner(s), as indicated below:

Transmission Provider:

PJM Interconnection, L.L.C.
2750 Monroe Blvd.
Audubon, PA 19403
interconnectionagreementnotices@pjm.com

Project Developer:

Bradford Solar LLC
c/o Vesper Energy
125 E John Carpenter Hwy, Suite 125
Irving, Texas 75062
Attn: Sonny Nguyen or successor, Transmission and Interconnection Director
Sonny.Nguyen@vesperenergy.com
(682) 478-8999

Transmission Owner:

Mid-Atlantic Interstate Transmission, LLC
76 South Main Street
A-GO-10
Akron, OH 44308
Attn: Michael Thorn or successor, FERC & Wholesale Connection Support Manager
mthorn@firstenergycorp.com
(330) 384-3889

With copies to:

Interconnections Attorney
FirstEnergy Service Company
76 South Main Street
A-GO-15
Akron, OH 44308
ajadue@firstenergycorp.com
(330) 384-5947

Legal Specialist
FirstEnergy Service Company
76 South Main Street
A-GO-15

Akron, OH 44308
ltynes_kunzo@firstenergycorp.com
(330) 384-5796

19.0 Incorporation of Other Documents. All portions of the Tariff and the Operating Agreement pertinent to the subject matter of this GIA and not otherwise made a part hereof are hereby incorporated herein and made a part hereof.

20.0 Addendum of Non-Standard Terms and Conditions for Interconnection Service. Subject to FERC approval, the parties agree that the terms and conditions set forth in Schedule F hereto are hereby incorporated herein by reference and be made a part of this GIA. In the event of any conflict between a provision of Schedule F that FERC has accepted and any provision of Appendix 2 to this GIA that relates to the same subject matter, the pertinent provision of Schedule F shall control.

21.0 Addendum of Project Developer's Agreement to Conform with IRS Safe Harbor Provisions for Non-Taxable Status. To the extent required, in accordance with section 24.1 of Appendix 2 to this GIA, Schedule G to this GIA shall set forth the Project Developer's agreement to conform with the IRS safe harbor provisions for non-taxable status.

22.0 Addendum of Interconnection Requirements for all Wind or Non-synchronous Generation Facilities. To the extent required, Schedule H to this GIA sets forth interconnection requirements for a wind or non-synchronous generation facilities and is hereby incorporated by reference and made a part of this GIA.

23.0 Infrastructure security of electric system equipment and operations and control hardware and software is essential to ensure day-to-day reliability and operational security. All interconnection parties agree to comply with all infrastructure security requirements of the North American Electric Reliability Corporation. All Transmission Providers, Transmission Owners, market participants, and Project Developers interconnected with electric systems are to comply with the recommendations offered by the President's Critical Infrastructure Protection Board and best practice recommendations from the electric reliability authority. All public utilities are expected to meet basic standards for electric system infrastructure and operational security, including physical, operational, and cyber-security practices.

24.0 This Agreement shall be deemed a contract made under, and the interpretation and performance of this Agreement and each of its provisions shall be governed and construed in accordance with, the applicable Federal and/or laws of the State of Delaware without regard to conflicts of laws provisions that would apply the laws of another jurisdiction.

IN WITNESS WHEREOF, Transmission Provider, Project Developer and Transmission Owner have caused this GIA to be executed by their respective authorized officials.

(Project Identifier #AE2-139)

Transmission Provider: **PJM Interconnection, L.L.C.**

By: /s/ *Susan L. McGill*	Manager, Strategic Initiatives	May 8, 2024
Name	Title	Date

Printed name of signer: Susam L. McGill

Project Developer: **Bradford Solar LLC**

By: /s/ *Juan Suarez*	Vice President	Apr 19, 2024
Name	Title	Date

Printed name of signer: Juan Suarez

Transmission Owner: **Mid-Atlantic Interstate Transmission, LLC**

By: /s/ *Gregory Hussing*	Dir FERC & RTO Support	May 8, 2024
Name	Title	Date

Printed name of signer: Gregory Hussing

SPECIFICATIONS FOR
GENERATION INTERCONNECTION AGREEMENT
By and Among
PJM INTERCONNECTION, L.L.C.
And
Bradford Solar LLC
And
Mid-Atlantic Interstate Transmission, LLC
(Project Identifier # AE2-139)

1.0 Description of Generating Facility to be interconnected with the Transmission System in the PJM Region:

a. Name of Generating Facility:

Bradford Solar

b. Location of Generating Facility:

GPS: 41.7225, -76.5371

Towanda, Franklin Township, Bradford County, PA

c. Size in megawatts of Generating Facility:

For Generation Project Developer:

Maximum Facility Output of 100.5 MW

d. Description of the equipment configuration:

A solar facility consisting of 38 x 2.683 MW Power Electronics FS2800 inverters and step up transformation with a high side voltage of 230 kV.

2.0 Rights

2.1 Capacity Interconnection Rights:

Pursuant to and subject to the applicable terms of the GIP, the Project Developer shall have Capacity Interconnection Rights at the Point(s) of Interconnection specified in this Generation Interconnection Agreement in the amount of 60.3 MW.

2.2 To the extent that any portion of the Generating Facility described in section 1.0 is not a Capacity Resource with Capacity Interconnection Rights, such portion of the Generating Facility shall be an Energy Resource. PJM reserves the right to limit total injections to the Maximum Facility Output in the event reliability would be affected by output greater than such quantity.

3.0 Construction Responsibility and Ownership of Interconnection Facilities and Transmission Owner Upgrades/Scope of Work.

a. Project Developer.

(1) Project Developer shall construct and, unless otherwise indicated, shall own, the following Interconnection Facilities:

i. Facilities for which the Project Developer has sole cost responsibility

a) One (1) 230 kV circuit breaker;
b) One (1) 230 kV generator lead line from the high side of Project Developer's collector substation to the Point of Change in Ownership

ii. Facilities for which a Network Upgrade Cost Responsibility Agreement is required.

None

(2) In the event that Project Developer has exercised the Option to Build, it is hereby permitted to build in accordance with and subject to the conditions and limitations set forth in Attachment L, the following portions of the Transmission Owner Interconnection Facilities and Stand Alone Network Upgrades which constitute or are part of the Generating Facility or Merchant Transmission Facility:

i. <u>Transmission Owner Interconnection Facilities:</u>

a) Terminate generator lead line at 3-breaker ring-bus substation for new generation interconnection.

ii. <u>Stand Alone Network Upgrades:</u>

a) Construct a new interconnection substation with (3) 230 kV breakers in a ring-bus arrangement.

Ownership of the facilities built by Project Developer pursuant to the Option to Build shall be as provided in Schedule L.

b. Transmission Owner

i. Facilities for which the Project Developer has sole cost responsibility

Transmission Owner Interconnection Facilities:

a) Energize and integrate Interconnection Facilities to the FirstEnergy Transmission System.

Stand Alone Network Upgrades:

a) Install physical security devices and other construction work by FirstEnergy at AE2-139 interconnection substation by Project Developer. (PJM Network Upgrade Number n8486.1)

b) Estimated design, installation, and testing/commissioning for Multiprotocol Label Switching (MPLS) equipment for Supervisory Control and Data Acquisition (SCADA) transport at AE2-139 interconnection substation. (PJM Network Upgrade Number n8486.2)
c) Install All-dielectric self-supporting (ADSS) fiber optic cable from East Towanda substation to the new interconnection substation. (PJM Network Upgrade Number n8486.3)

Network Upgrades:

a) Cut the existing East Towanda – Marshall 230kV line approximately 4 miles from the Scotch Hollow Tap to create a loop into the new 3 breaker ring bus. (PJM Network Upgrade Number n8486.4)
b) Marshall Substation: Relay settings, drawings and nameplate review. (PJM Network Upgrade Number n8486.5)
c) East Towanda Substation: Relay settings, drawings and nameplate review. (PJM Network Upgrade Number n8486.6)
d) Scotch Hollow Substation: Relay settings, drawings and nameplate review. (PJM Network Upgrade Number n8486.7)
e) Grover Substation: Relay settings, drawings and nameplate review. (PJM Network Upgrade Number n8486.8)

Pursuant to Project Developer's Option to Build election, Transmission Owner shall perform the following Option to Build oversight:

a) FirstEnergy Oversight of Developer Option to Build Substation.

Other Scope of Work:

a) Provide support for Project Developer revenue metering installation.

ii. Facilities for which a Network Upgrade Cost Responsibility Agreement is required.

None

d. Additional Contingent Facilities which must be completed prior to Commercial Operation of the Generating Facility or Merchant Transmission Facility

Except as determined through an interim deliverability study for a particular Delivery Year, in order to maintain system reliability, the 100.5 MW energy and 60.3 MW of Capacity associated with the Generating Facility under this GIA cannot come fully in service prior to completion of the following upgrade:

Reterminate the Lackawanna T3 and T4 500/230 kV transformers on the 230 kV side to remove them from the 230 kV buses and bring them into dedicated bay positions that are not adjacent to one another. (PJM Baseline Project b3730)

4.0 Subject to modification pursuant to the Negotiated Contract Option and/or the Option to Build, Project Developer shall be subject to the estimated charges detailed below, which shall be billed and paid in accordance with Appendix , section 11 of this GIA and Schedule L, section 9.0

4.1 Transmission Owner Interconnection Facilities Charge: $74,550

4.2 Network Upgrades Charge: $3,668,968

4.3 Option to Build Charges: $

4.4 Distribution Upgrades Charge: $0

4.5 Other Charges: $1,010,323 ($1,005,350 Option to Build Oversight + $4,973 revenue metering installation support)

4.6 Cost breakdown:

$3,436,623	Direct Labor
$744,398	Direct Material
$538,216	Indirect Labor
$34,604	Indirect Material
$4,753,841	Total

4.7 Security Amount Breakdown:

$3,748,491 Estimated Cost of Network Upgrades, Distribution Upgrades, Transmission Owner Interconnection Facilities, and Other Charges

plus $1,005,350 Option to Build Security for Transmission Owner Interconnection Facilities and Stand Alone Network Upgrades (including Cancellation Costs)

$4,753,841 Sum of Security required for costs listed in Specifications sections 4.1 through 4.5 of this GIA

less $0 Portion of Costs already paid by Project Developer

$4,753,841 Net Security amount required

APPENDICES:

- **APPENDIX 1 - DEFINITIONS**
- **APPENDIX 2 - STANDARD TERMS AND CONDITIONS FOR INTERCONNECTIONS**

SCHEDULES:

- **SCHEDULE A - GENERATING FACILITY LOCATION/SITE PLAN**
- **SCHEDULE B - SINGLE-LINE DIAGRAM**
- **SCHEDULE C - LIST OF METERING EQUIPMENT**
- **SCHEDULE D - APPLICABLE TECHNICAL REQUIREMENTS AND STANDARDS**
- **SCHEDULE E - SCHEDULE OF CHARGES**
- **SCHEDULE F - SCHEDULE OF NON-STANDARD TERMS & CONDITIONS**
- **SCHEDULE G - PROJECT DEVELOPER'S AGREEMENT TO CONFORM WITH IRS SAFE HARBOR PROVISIONS FOR NON-TAXABLE STATUS**
- **SCHEDULE H - INTERCONNECTION REQUIREMENTS FOR ALL WIND, SOLAR AND NON-SYNCHRONOUS GENERATION FACILITIES**
- **SCHEDULE I – INTERCONNECTION SPECIFICATIONS FOR AN ENERGY STORAGE RESOURCE**
- **SCHEDULE J – SCHEDULE OF TERMS AND CONDITIONS FOR SURPLUS INTERCONNECTION SERVICE**
- **SCHEDULE K – REQUIREMENTS FOR INTERCONNECTION SERVICE BELOW FULL ELECTRICAL GENERATING CAPABILITY**
- **SCHEDULE L – INTERCONNECTION CONSTRUCTION TERMS AND CONDITIONS**
- **SCHEDULE L, APPENDIX 1 – NEGOTIATED CONTRACT OPTION TERMS**

APPENDIX 1

DEFINITIONS

From the Generation Interconnection Procedures accepted for filing by FERC as of the effective date of this agreement

For purposes of these Generation Interconnection Procedures and any agreement set forth in Tariff, Part IX, in the event of a conflict between the definitions set forth herein and the definitions set forth in Tariff, Part I, the definitions set forth in these Generation Interconnection Procedures shall control.

Abnormal Condition:

"Abnormal Condition" shall mean any condition on the Interconnection Facilities which, determined in accordance with Good Utility Practice, is: (i) outside normal operating parameters such that facilities are operating outside their normal ratings or that reasonable operating limits have been exceeded; and (ii) could reasonably be expected to materially and adversely affect the safe and reliable operation of the Interconnection Facilities; but which, in any case, could reasonably be expected to result in an Emergency Condition. Any condition or situation that results from lack of sufficient generating capacity to meet load requirements or that results solely from economic conditions shall not, standing alone, constitute an Abnormal Condition.

Affected System:

"Affected System" shall mean an electric system other than the Transmission Provider's Transmission System that may be affected by a proposed interconnection or on which a proposed interconnection or addition of facilities or upgrades may require modifications or upgrades to the Transmission System.

Affected System Customer

"Affected System Customer" shall mean the developer responsible for an Affected System Facility that requires Network Upgrades to Transmission Provider's Transmission System,

Affected System Facility

"Affected System Facility" shall mean a new, expanded or upgraded generation or transmission facility outside of Transmission Provider's Transmission System, the effect of which requires Network Upgrades to Transmission Provider's Transmission System.

Affected System Operator

"Affected System Operator" shall mean an entity that operates an Affected System or, if the Affected System is under the operational control of an independent system operator or a regional transmission organization, such independent entity.

Affected System Study Agreement

"Affected System Study Agreement" shall mean the agreement set forth in Tariff, Part IX, Subpart N.

Affiliate:

"Affiliate" shall mean any two or more entities, one of which Controls the other or that are under common Control. "Control," as that term is used in this definition, shall mean the possession, directly or indirectly, of the power to direct the management or policies of an entity. Ownership of publicly-traded equity securities of another entity shall not result in Control or affiliation for purposes of the Tariff or Operating Agreement if the securities are held as an investment, the holder owns (in its name or via intermediaries) less than 10 percent of the outstanding securities of the entity, the holder does not have representation on the entity's board of directors (or equivalent managing entity) or vice versa, and the holder does not in fact exercise influence over day-to-day management decisions. Unless the contrary is demonstrated to the satisfaction of the Members Committee, Control shall be presumed to arise from the ownership of or the power to vote, directly or indirectly, 10 percent or more of the voting securities of such entity.

Ancillary Services:

"Ancillary Services" shall mean those services that are necessary to support the transmission of capacity and energy from resources to loads while maintaining reliable operation of the Transmission Provider's Transmission System in accordance with Good Utility Practice.

Applicable Laws and Regulations:

"Applicable Laws and Regulations" shall mean all duly promulgated applicable federal, State and local laws, regulations, rules, ordinances, codes, decrees, judgments, directives, judicial or administrative orders, permits and other duly authorized actions of any Governmental Authority having jurisdiction over the relevant parties, their respective facilities, and/or the respective services they provide.

Applicable Regional Entity:

"Applicable Regional Entity" shall mean the Regional Entity for the region in which a Network Customer, Transmission Customer, Project Developer, Eligible Customer, or Transmission Owner operates.

Applicable Standards:

"Applicable Standards" shall mean the requirements and guidelines of NERC, the Applicable Regional Entity, the Control Area in which the Generating Facility or Merchant Transmission Facility is electrically located and the Transmission Owner FERC Form No. 715 – Annual Transmission Planning and Evaluation Report for each Applicable Regional Entity; the PJM Manuals; and Applicable Technical Requirements and Standards.

Applicable Technical Requirements and Standards:

"Applicable Technical Requirements and Standards" shall mean those certain technical requirements and standards applicable to interconnections of generation and/or transmission facilities with the facilities of an Transmission Owner or, as the case may be and to the extent

applicable, of an Electric Distributor, as published by Transmission Provider in a PJM Manual. All Applicable Technical Requirements and Standards shall be publicly available through postings on Transmission Provider's internet website.

Application and Studies Agreement:

"Application and Studies Agreement" shall mean the application that must be submitted by a Project Developer or Eligible Customer that seeks to initiate a New Service Request, a form of which is set forth in Tariff, Part VII, Subpart A. An Application and Studies Agreement must be submitted electronically through PJM's web site in accordance with PJM's Manuals.

Application Deadline:

"Application Deadline" shall mean the Cycle deadline for submitting a Completed New Service Request, as set forth in Tariff, Part VII, Subpart C, section 306(A). If Project Developer's or Eligible Customer's Completed New Service Request is received by Transmission Provider after a particular Cycle deadline, such Completed New Service Request shall automatically be considered as part of the immediate subsequent Cycle.

Application Phase:

"Application Phase" shall mean the Cycle period encompassing both the submission and review of New Service Requests as set forth in Tariff, Part VII, Subpart C, subsections 306(A) and 306(B).

Behind The Meter Generation:

"Behind The Meter Generation" shall refer to a generation unit that delivers energy to load without using the Transmission System or any distribution facilities (unless the entity that owns or leases the distribution facilities has consented to such use of the distribution facilities and such consent has been demonstrated to the satisfaction of the Office of the Interconnection); provided, however, that Behind The Meter Generation does not include (i) at any time, any portion of such generating unit's capacity that is designated as a Generation Capacity Resource; or (ii) in an hour, any portion of the output of such generating unit that is sold to another entity for consumption at another electrical location or into the PJM Interchange Energy Market.

Breach:

"Breach" shall mean the failure of a party to perform or observe any material term or condition of the Tariff, Part VII, or any agreement entered into thereunder as described in the relevant provisions of such agreement.

Breaching Party:

"Breaching Party" shall mean a party that is in Breach of the Tariff, Part VII and/or an agreement entered into thereunder.

Business Day:

"Business Day" shall mean a day ending at 5 pm Eastern prevailing time in which the Federal Reserve System is open for business and is not a scheduled PJM holiday.

Cancellation Costs:

"Cancellation Costs" shall mean costs and liabilities incurred in connection with: (a) cancellation of supplier and contractor written orders and agreements entered into to design, construct and install Transmission Owner Interconnection Facilities, and/or Customer-Funded Upgrades, and/or (b) completion of some or all of the required Transmission Owner Interconnection Facilities, and/or Customer-Funded Upgrades, or specific unfinished portions and/or removal of any or all of such facilities which have been installed, to the extent required for the Transmission Provider and/or Transmission Owner(s) to perform their respective obligations under the Tariff, Part VII. Cancellation costs may include costs for Customer-Funded Upgrades assigned to Project Developer or Eligible Customer, in accordance with the Tariff and as reflected in this GIA, that remain the responsibility of Project Developer or Eligible Customer under the Tariff, even if such New Service Request is terminated or withdrawn.

Capacity:

"Capacity" shall mean the installed capacity requirement of the Reliability Assurance Agreement or similar such requirements as may be established.

Capacity Interconnection Rights:

"Capacity Interconnection Rights" shall mean the rights to input generation as a Generation Capacity Resource into the Transmission System at the Point of Interconnection.

Capacity Resource:

"Capacity Resource" shall have the meaning provided in the Reliability Assurance Agreement.

Commencement Date:

"Commencement Date" shall mean the date on which Interconnection Service commences in accordance with a Generation Interconnection Agreement.

Common Use Upgrade:

"Common Use Upgrade" or "CUU" shall mean a Network Upgrade that is needed for the interconnection of Generating Facilities or Merchant Transmission Facilities of more than one Project Developer or Eligible Customer and which is the shared responsibility of each Project Developer or Eligible Customer.

Completed Application:

"Completed Application" shall mean an application that satisfies all of the information and other requirements of the Tariff, including any required deposit.

Completed New Service Request:

"Completed New Service Request" shall mean an application that satisfies all of the information and other requirements of the Tariff, including any required deposit(s). A Completed New Service Request, if accepted upon review, shall become a valid New Service Request.

Confidential Information:

"Confidential Information" shall mean any confidential, proprietary, or trade secret information of a plan, specification, pattern, procedure, design, device, list, concept, policy, or compilation relating to the present or planned business of a Project Developer, Eligible Customer, Transmission Owner, or other Interconnection Party or Construction Party, which is designated as confidential by the party supplying the information, whether conveyed verbally, electronically, in writing, through inspection, or otherwise, and shall include, without limitation, all information relating to the producing party's technology, research and development, business affairs and pricing, and any information supplied by any Project Developer, Eligible Customer, Transmission Owner, or other Interconnection Party or Construction Party to another such party prior to the execution of an Generation Interconnection Agreement or a Construction Service Agreement.

Consolidated Transmission Owners Agreement, PJM Transmission Owners Agreement or Transmission Owners Agreement:

"Consolidated Transmission Owners Agreement," "PJM Transmission Owners Agreement" or "Transmission Owners Agreement" shall mean the certain Consolidated Transmission Owners Agreement dated as of December 15, 2005, by and among the Transmission Owners and by and between the Transmission Owners and PJM Interconnection, L.L.C. on file with the Commission, as amended from time to time.

Constructing Entity:

"Constructing Entity" shall mean either the Transmission Owner, Project Developer, Eligible Customer or Affected System Customer, depending on which entity has the construction responsibility pursuant to the Tariff, Part VII and the applicable GIA or Construction Service Agreement; this term shall also be used to refer to a Project Developer or Eligible Customer with respect to the construction of the Interconnection Facilities.

Construction Party:

"Construction Party" shall mean a party to a Construction Service Agreement, Network Upgrade Cost Responsibility Agreement or a party to a GIA that requires activities pursuant to a GIA.

Construction Service Agreement:

"Construction Service Agreement" shall mean either an Interconnection Construction Service Agreement, Network Upgrade Cost Responsibility Agreement or Upgrade Construction Service Agreement.

Contingent Facilities:

"Contingent Facilities" shall mean those unbuilt Interconnection Facilities and Network Upgrades upon which the Interconnection Request's costs, timing, and study findings are dependent and, if delayed or not built, could cause a need for restudies of the Interconnection Request or a reassessment of the Interconnection Facilities and/or Network Upgrades and/or costs and timing.

Control Area:

"Control Area" shall mean an electric power system or combination of electric power systems bounded by interconnection metering and telemetry to which a common automatic generation control scheme is applied in order to:

(1) match the power output of the generators within the electric power system(s) and energy purchased from entities outside the electric power system(s), with the load within the electric power system(s);

(2) maintain scheduled interchange with other Control Areas, within the limits of Good Utility Practice;

(3) maintain the frequency of the electric power system(s) within reasonable limits in accordance with Good Utility Practice; and

(4) provide sufficient generating capacity to maintain operating reserves in accordance with Good Utility Practice.

Controllable A.C. Merchant Transmission Facilities:

"Controllable A.C. Merchant Transmission Facilities" shall mean transmission facilities that (1) employ technology which Transmission Provider reviews and verifies will permit control of the amount and/or direction of power flow on such facilities to such extent as to effectively enable the controllable facilities to be operated as if they were direct current transmission facilities, and (2) that are interconnected with the Transmission System pursuant to the Tariff, Part VII.

Cost Responsibility Agreement:

"Cost Responsibility Agreement" shall mean a form of agreement between Transmission Provider and a Project Developer with an existing generating facility, intended to provide the terms and conditions for the Transmission Provider to perform certain modeling, studies or analysis to determine whether the Project Developer may enter into a GIA with PJM and the Transmission Owner. A form of the Cost Responsibility Agreement is set forth in Tariff, Part IX, Subpart F.

Costs:

As used in the Tariff, Part VII and related agreements and attachments, "Costs" shall mean costs and expenses, as estimated or calculated, as applicable, including, but not limited to, capital expenditures, if applicable, and overhead, return, and the costs of financing and taxes and any Incidental Expenses.

Customer-Funded Upgrade:

"Customer-Funded Upgrade" shall mean any Network Upgrade, Distribution Upgrade, or Merchant Network Upgrade for which cost responsibility (i) is imposed on a Project Developer or Eligible Customer pursuant to Tariff, Part VII, Subpart D, section 307(A)(5), or (ii) is voluntarily undertaken by an Upgrade Customer in fulfillment of an Upgrade Request. No Network Upgrade, Distribution Upgrade or Merchant Network Upgrade or other transmission expansion or enhancement shall be a Customer-Funded Upgrade if and to the extent that the costs thereof are included in the rate base of a public utility on which a regulated return is earned.

Cycle:

"Cycle" shall mean that period of time between the start of an Application phase and conclusion of the corresponding Final Agreement Negotiation Phase. The Cycle consists of the Application Phase, Phase I, Decision Point I, Phase II, Decision Point II, Phase III, Decision Point III, and the Final Agreement Negotiation Phase.

Decision Point I:

"Decision Point I" shall mean the time period that commences on the first Business Day immediately following Phase I of a Cycle, and shall end within 30 calendar days; however, if the 30th does not fall on a Business Day, this time period shall conclude on the next Business Day.

Decision Point II:

"Decision Point II" shall mean the time period that commences on the first Business Day immediately following Phase II of a Cycle, and shall end within 30 calendar days; however, if the 30th does not fall on a Business Day, this time period shall conclude on the next Business Day.

Decision Point III:

"Decision Point III" shall mean the time period that commences on the first Business Day immediately following Phase III of a Cycle, and shall end within 30 calendar days; however, if the 30th does not fall on a Business Day, this time period shall conclude on the next Business Day.

Default:

As used in the Generation Interconnection Agreement, Construction Service Agreement, and Network Upgrade Cost Responsibility Agreement, "Default" shall mean the failure of a Breaching Party to cure its Breach in accordance with the applicable provisions of a Generation Interconnection Agreement, Construction Service Agreement, or Network Upgrade Cost Responsibility Agreement.

Distribution System:

"Distribution System" shall mean the Transmission Owner's facilities and equipment used to transmit electricity to ultimate usage points such as homes and industries directly from nearby generators or from interchanges with higher voltage transmission networks which transport bulk power over longer distances. The voltage levels at which distribution systems operate differ among areas.

Distribution Upgrades:

"Distribution Upgrades" shall mean the additions, modifications, and upgrades to the Distribution System at or beyond the Point of Interconnection to facilitate interconnection of the Generating Facility and render the delivery service necessary to affect Project Developer's wholesale sale of electricity in interstate commerce. Distribution Upgrades do not include Interconnection Facilities.

Eligible Customer:

"Eligible Customer" shall mean:

(i) Any electric utility (including any Transmission Owner and any power marketer), Federal power marketing agency, or any person generating electric energy for sale for resale is an Eligible Customer under the Tariff. Electric energy sold or produced by such entity may be electric energy produced in the United States, Canada or Mexico. However, with respect to transmission service that the Commission is prohibited from ordering by section 212(h) of the Federal Power Act, such entity is eligible only if the service is provided pursuant to a state requirement that the Transmission Provider or Transmission Owner offer the unbundled transmission service, or pursuant to a voluntary offer of such service by a Transmission Owner.

(ii) Any retail customer taking unbundled transmission service pursuant to a state requirement that the Transmission Provider or a Transmission Owner offer the transmission service, or pursuant to a voluntary offer of such service by a Transmission Owner, is an Eligible Customer under the Tariff. As used in Tariff, Part VII, Eligible Customer shall mean only those Eligible Customers that have submitted an Application and Study Agreement.

Emergency Condition:

"Emergency Condition" shall mean a condition or situation (i) that in the judgment of any Interconnection Party is imminently likely to endanger life or property; or (ii) that in the judgment of the Transmission Owner or Transmission Provider is imminently likely (as determined in a non-discriminatory manner) to cause a material adverse effect on the security of, or damage to, the

Transmission System, the Interconnection Facilities, or the transmission systems or distribution systems to which the Transmission System is directly or indirectly connected; or (iii) that in the judgment of Project Developer is imminently likely (as determined in a non-discriminatory manner) to cause damage to the Generating Facility or to the Project Developer Interconnection Facilities. System restoration and black start shall be considered Emergency Conditions, provided that a Generation Project Developer is not obligated by a Generation Interconnection Agreement to possess black start capability. Any condition or situation that results from lack of sufficient generating capacity to meet load requirements or that results solely from economic conditions shall not constitute an Emergency Condition, unless one or more of the enumerated conditions or situations identified in this definition also exists.

Energy Resource:

"Energy Resource" shall mean a Generating Facility that is not a Capacity Resource.

Energy Storage Resource:

"Energy Storage Resource" shall mean a resource capable of receiving electric energy from the grid and storing it for later injection to the grid that participates in the PJM Energy, Capacity and/or Ancillary Services markets as a Market Participant

Engineering and Procurement Agreement:

"Engineering and Procurement Agreement" shall mean an agreement that authorizes Transmission Owner to begin engineering and procurement of long lead-time items necessary for the establishment of the interconnection in order to advance the implementation of the Interconnection Request. An Engineering and Procurement Agreement is not intended to be used for the actual construction of any Interconnection Facilities or Transmission Upgrades. A form of the Engineering and Procurement Agreement is set forth in Tariff, Part IX, Subpart D. An Engineering and Procurement Agreement can only be requested by a Project Developer, and can only be requested in Phase III.

Facilities Study:

"Facilities Study" shall be an engineering study conducted by the Transmission Provider (in coordination with the affected Transmission Owner(s)) to: (1) determine the required modifications to the Transmission Provider's Transmission System necessary to implement the conclusions of the System Impact Studies; and (2) complete any additional studies or analyses documented in the System Impact Studies or required by PJM Manuals, and determine the required modifications to the Transmission Provider's Transmission System based on the conclusions of such additional studies.

Federal Power Act:

"Federal Power Act" shall mean the Federal Power Act, as amended, 16 U.S.C. §§ 791a, et seq.

FERC or Commission:

"FERC" or "Commission" shall mean the Federal Energy Regulatory Commission or any successor federal agency, commission or department exercising jurisdiction over the Tariff, Operating Agreement and Reliability Assurance Agreement.

Final Agreement Negotiation Phase:

"Final Agreement Negotiation Phase" shall mean the phase set forth in Tariff, Part VII, Subpart D, section 314 to tender, negotiate, and execute any service agreement in Tariff, Part IX.

Generating Facility:

"Generating Facility" shall mean Project Developer's device for the production and/or storage for later injection of electricity identified in the New Service Request, but shall not include the Project Developer's Interconnection Facilities. A Generating Facility consists of one or more generating unit(s) and/or storage device(s) which usually can operate independently and be brought online or taken offline individually.

Generation Interconnection Agreement ("GIA"):

"Generation Interconnection Agreement" ("GIA") shall mean the form of interconnection agreement applicable to a Generation Interconnection Request or Transmission Interconnection Request. A form of the GIA is set forth in Tariff, Part IX, Subpart B.

Generation Interconnection Procedures ("GIP"):

"Generation Interconnection Procedures" ("GIP") shall mean the interconnection procedures set forth in Tariff, Part VII.

Generation Interconnection Request:

"Generation Interconnection Request" shall mean a request by a Generation Project Developer pursuant to Tariff, Part VII, Subpart C, section 306(A)(1), to interconnect a generating unit with the Transmission System or to increase the capacity of a generating unit interconnected with the Transmission System in the PJM Region.

Generation Project Developer:

"Generation Project Developer" shall mean an entity that submits a Generation Interconnection Request to interconnect a new generation facility or to increase the capacity of an existing generation facility interconnected with the Transmission System in the PJM Region.

Good Utility Practice:

"Good Utility Practice" shall mean any of the practices, methods and acts engaged in or approved by a significant portion of the electric utility industry during the relevant time period, or any of the practices, methods and acts which, in the exercise of reasonable judgment in light of the facts known at the time the decision was made, could have been expected to accomplish the desired result at a reasonable cost consistent with good business practices, reliability, safety and expedition. Good Utility Practice is not intended to be limited to the optimum practice, method, or act to the exclusion of all others, but rather is intended to include acceptable practices, methods, or acts generally accepted in the region; including those practices required by Federal Power Act, section 215(a)(4).

Governmental Authority:

"Governmental Authority" shall mean any federal, state, local or other governmental, regulatory or administrative agency, court, commission, department, board, or other governmental subdivision, legislature, rulemaking board, tribunal, arbitrating body, or other governmental authority having jurisdiction over any Interconnection Party or Construction Party or regarding any matter relating to a Generation Interconnection Agreement or Construction Service Agreement, as applicable.

Hazardous Substances:

"Hazardous Substance" shall mean any chemicals, materials or substances defined as or included in the definition of "hazardous substances," "hazardous wastes," "hazardous materials," "hazardous constituents," "restricted hazardous materials," "extremely hazardous substances," "toxic substances," "radioactive substances," "contaminants," "pollutants," "toxic pollutants" or words of similar meaning and regulatory effect under any applicable Environmental Law, or any other chemical, material or substance, exposure to which is prohibited, limited or regulated by any applicable Environmental Law.

Incidental Expenses:

"Incidental Expenses" shall mean those expenses incidental to the performance of construction pursuant to an Interconnection Construction Service Agreement, including, but not limited to, the expense of temporary construction power, telecommunications charges, Interconnected Transmission Owner expenses associated with, but not limited to, document preparation, design review, installation, monitoring, and construction-related operations and maintenance for the Generating Facility and for the Interconnection Facilities.

Incremental Auction Revenue Rights:

"Incremental Auction Revenue Rights" shall mean the additional Auction Revenue Rights, not previously feasible, created by the addition of Incremental Rights-Eligible Required Transmission Enhancements, Merchant Transmission Facilities, or of one or more Customer-Funded Upgrades.

Incremental Capacity Transfer Rights:

"Incremental Capacity Transfer Right" shall mean a Capacity Transfer Right allocated to a Generation Project Developer or Transmission Project Developer obligated to fund a transmission facility or upgrade, to the extent such upgrade or facility increases the transmission import capability into a Locational Deliverability Area, or a Capacity Transfer Right allocated to a Responsible Customer in accordance with Tariff, Schedule 12A.

Incremental Deliverability Rights (IDRs):

"Incremental Deliverability Rights" ("IDR)" shall mean the rights to the incremental ability, resulting from the addition of Merchant Transmission Facilities, to inject energy and capacity at a point on the Transmission System, such that the injection satisfies the deliverability requirements of a Capacity Resource. Incremental Deliverability Rights may be obtained by a generator or a Generation Project Developer, pursuant to an IDR Transfer Agreement, to satisfy, in part, the deliverability requirements necessary to obtain Capacity Interconnection Rights.

Initial Operation:

"Initial Operation" shall mean the commencement of operation of the Generating Facility and Project Developer Interconnection Facilities after satisfaction of the conditions of Tariff, Part IX, Subpart B, Appendix 2, section 1.4.

Interconnected Entity:

"Interconnected Entity" shall mean either the Project Developer or the Transmission Owner; Interconnected Entities shall mean both of them.

Interconnection Construction Service Agreement:

"Interconnection Construction Service Agreement" shall mean the agreement entered into by an Project Developer, Transmission Owner and the Transmission Provider pursuant to this Tariff, Part VII in the form set forth in Tariff, Part IX, Subpart J or Tariff, Part IX, Subpart H, relating to construction of Common Use Upgrades, Distribution Upgrades, Network Upgrades, Stand Alone Network Upgrades and/or Transmission Owner Interconnection Facilities and coordination of the construction and interconnection of an associated Generating Facility.

Interconnection Facilities:

"Interconnection Facilities" shall mean the Transmission Owner's Interconnection Facilities and the Project Developer's Interconnection Facilities. Collectively Interconnection Facilities include all facilities and equipment between the Generating Facility and the Point of Interconnection, including any modifications, additions, or upgrades that are necessary to physically and electrically interconnect the Generating Facility to the Transmission System. Interconnection Facilities are sole use facilities and shall not include Distribution Upgrades, Stand Alone Network Upgrades, or Network Upgrades.

Interconnection Party:

"Interconnection Party" shall mean a Transmission Provider, Project Developer, or the Transmission Owner. Interconnection Parties shall mean all of them.

Interconnection Request:

"Interconnection Request" shall mean a Generation Interconnection Request, a Transmission Interconnection Request and/or an IDR Transfer Agreement.

Interconnection Service:

"Interconnection Service" shall mean the physical and electrical interconnection of the Generating Facility with the Transmission System pursuant to the terms of this Tariff, Part VII and the Generation Interconnection Agreement entered into pursuant thereto by Project Developer, the Transmission Owner and Transmission Provider.

List of Approved Contractors:

"List of Approved Contractors" shall mean a list developed by each Transmission Owner and published in a PJM Manual of (a) contractors that the Transmission Owner considers to be qualified to install or construct new facilities and/or upgrades or modifications to existing facilities on the Transmission Owner's system, provided that such contractors may include, but need not be limited to, contractors that, in addition to providing construction services, also provide design and/or other construction-related services, and (b) manufacturers or vendors of major transmission-related equipment (e.g., high-voltage transformers, transmission line, circuit breakers) whose products the Transmission Owner considers acceptable for installation and use on its system.

Load Serving Entity (LSE):

"Load Serving Entity" or "LSE" shall have the meaning specified in the Reliability Assurance Agreement.

Material Modification:

"Material Modification" shall mean, as determined through a Necessary Study, any modification to a Generation Interconnection Agreement that has a material adverse effect on the cost or timing of Interconnection Studies related to, or any Distribution Upgrades, Network Upgrades, Stand Alone Network Upgrades or Transmission Owner Interconnection Facilities needed to accommodate, any Interconnection Request with a later Cycle.

Maximum Facility Output:

"Maximum Facility Output" shall mean the maximum (not nominal) net electrical power output in megawatts, specified in the Generation Interconnection Agreement, after supply of any parasitic or host facility loads, that a Generation Project Developer's Generating Facility is expected to

produce, provided that the specified Maximum Facility Output shall not exceed the output of the proposed Generating Facility that Transmission Provider utilized in the System Impact Study.

Maximum State of Charge:

"Maximum State of Charge" shall mean the maximum State of Charge that should not be exceeded, measured in units of megawatt-hours.

Merchant A.C. Transmission Facilities:

"Merchant A.C. Transmission Facility" shall mean Merchant Transmission Facilities that are alternating current (A.C.) transmission facilities, other than those that are Controllable A.C. Merchant Transmission Facilities.

Merchant D.C. Transmission Facilities:

"Merchant D.C. Transmission Facilities" shall mean direct current (D.C.) transmission facilities that are interconnected with the Transmission System pursuant to the Tariff.

Merchant Network Upgrades:

"Merchant Network Upgrades" shall mean additions to, or modifications or replacements of, or advancement of additions to, or modifications or replacement of, physical facilities of the Transmission Owner that, on the date of the pertinent Upgrade Customer's Upgrade Request, are part of the Transmission System or are included in the Regional Transmission Expansion Plan, but that are not already subject to an already existing, fully executed interconnection related agreement, such as a Generation Interconnection Agreement, stand-alone Construction Service Agreement, Network Upgrade Cost Responsibility Agreement or Upgrade Construction Service Agreement.

Merchant Transmission Facilities:

"Merchant Transmission Facilities" shall mean A.C. or D.C. transmission facilities that are interconnected with or added to the Transmission System pursuant to the Tariff, Part VII and that are so identified in Tariff, Attachment T, provided, however, that Merchant Transmission Facilities shall not include (i) any Project Developer Interconnection Facilities, (ii) any physical facilities of the Transmission System that were in existence on or before March 20, 2003 ; (iii) any expansions or enhancements of the Transmission System that are not identified as Merchant Transmission Facilities in the Regional Transmission Expansion Plan and Tariff, Attachment T, or (iv) any transmission facilities that are included in the rate base of a public utility and on which a regulated return is earned.

Merchant Transmission Provider:

"Merchant Transmission Provider" shall mean an Project Developer that (1) owns, controls, or controls the rights to use the transmission capability of, Merchant D.C. Transmission Facilities

and/or Controllable A.C. Merchant Transmission Facilities that connect the Transmission System with another control area, (2) has elected to receive Transmission Injection Rights and Transmission Withdrawal Rights associated with such facility pursuant to this Tariff, Part VII, Subpart E, section 330, and (3) makes (or will make) the transmission capability of such facilities available for use by third parties under terms and conditions approved by the Commission and stated in the Tariff, consistent with Tariff, Part VII, Subpart E, section 319.

Metering Equipment:

"Metering Equipment" shall mean all metering equipment installed at the metering points designated in the appropriate appendix to a Generation Interconnection Agreement.

Minimum State of Charge:

"Minimum State of Charge" shall mean the minimum State of Charge that should be maintained in units of megawatt-hours.

NERC:

"NERC" shall mean the North American Electric Reliability Corporation or any successor thereto.

Necessary Study Agreement:

"Necessary Study Agreement" shall mean the form of agreement for preparation of one or more Necessary Studies, as set forth in Tariff, Part IX, Subpart G.

Necessary Study:

"Necessary Study(ies)" shall mean the assessment(s) undertaken by the Transmission Provider to determine whether a planned modification under Appendix 2, section 3.4.1 of the GIA will have a permanent material impact on the Transmission System and to identify the additions, modifications, or replacements to the Transmission System, if any, that are necessary, in accordance with Good Utility Practice, and/or to maintain compliance with Applicable Laws and Regulations or Applicable Standards, to accommodate the planned modifications. A form of the Necessary Study Agreement is set forth in Tariff, Part IX, Subpart G.

Network Upgrade Cost Responsibility Agreement:

"Network Upgrade Cost Responsibility Agreement" shall mean the agreement entered into by the Project Developer Parties and the Transmission Provider pursuant to this GIP, and in the form set forth in Tariff, Part IX, Subpart H, relating to construction of Common Use Upgrades and coordination of the construction and interconnection of associated Generating Facilities. In regard to Common Use Upgrades, a separate Network Upgrade Cost Responsibility Agreement will be executed for each set of Common Use Upgrades on the system of a specific Transmission Owner that is associated with the interconnection of a Generating Facility.

Network Upgrades:

"Network Upgrades" shall mean modifications or additions to transmission-related facilities that are integrated with and support the Transmission Provider's overall Transmission System for the general benefit of all users of such Transmission System. Network Upgrades shall include Stand Alone Network Upgrades which are Network Upgrades that are not part of an Affected System; only serve the Generating Facility or Merchant Transmission Facility; and have no impact or potential impact on the Transmission System until the final tie-in is complete. Both Transmission Provider and Project Developer must agree as to what constitutes Stand Alone Network Upgrades and identify them in the GIA, Specifications, section 3.0 or in the Construction Service Agreement, Schedule C. If the Transmission Provider and Project Developer disagree about whether a particular Network Upgrade is a Stand Alone Network Upgrade, the Transmission Provider must provide the Project Developer a written technical explanation outlining why the Transmission Provider does not consider the Network Upgrade to be a Stand Alone Network Upgrade within 15 days of its determination.

New Service Request:

"New Service Request" shall mean an Interconnection Request or a Completed Application.

Nominal Rated Capability:

"Nominal Rated Capability" shall mean the nominal maximum rated capability in megawatts of a Transmission Project Developer's Generating Facility or the nominal increase in transmission capability in megawatts of the Transmission System resulting from the interconnection or addition of a Transmission Project Developer's Generating Facility, as determined in accordance with pertinent Applicable Standards and specified in the Generation Interconnection Agreement.

Open Access Same-Time Information System (OASIS) or PJM Open Access Same-Time Information System:

"Open Access Same-Time Information System," "PJM Open Access Same-Time Information System" or "OASIS" shall mean the electronic communication and information system and standards of conduct contained in Part 37 and Part 38 of the Commission's regulations and all additional requirements implemented by subsequent Commission orders dealing with OASIS for the collection and dissemination of information about transmission services in the PJM Region, established and operated by the Office of the Interconnection in accordance with FERC standards and requirements.

Operating Agreement of the PJM Interconnection, L.L.C., Operating Agreement or PJM Operating Agreement:

"Operating Agreement of the PJM Interconnection, L.L.C.," "Operating Agreement" or "PJM Operating Agreement" shall mean the Amended and Restated Operating Agreement of PJM Interconnection, L.L.C. dated as of April 1, 1997 and as amended and restated as of June 2, 1997, including all Schedules, Exhibits, Appendices, addenda or supplements hereto, as amended from

time to time thereafter, among the Members of the PJM Interconnection, L.L.C., on file with the Commission.

Option to Build:

"Option to Build" shall mean the option of the Project Developer to build certain Stand Alone Network Upgrades, as set forth in, and subject to the terms of, the Construction Service Agreement.

Part I:

"Part I" shall mean the Tariff Definitions and Common Service Provisions contained in Tariff, Part I, sections 1 through 12A.

Part II:

"Part II" shall mean Tariff, Part II, sections 13 through 27A pertaining to Point-To-Point Transmission Service in conjunction with the applicable Common Service Provisions of Tariff, Part I and appropriate Schedules and Attachments.

Part III:

"Part III" shall mean Tariff, Part III, sections 28 through 35 pertaining to Network Integration Transmission Service in conjunction with the applicable Common Service Provisions of Tariff, Part I and appropriate Schedules and Attachments.

Part IV:

"Part IV" shall mean Tariff, Part IV, sections 36 through 112C pertaining to generation or merchant transmission interconnection to the Transmission System in conjunction with the applicable Common Service Provisions of Tariff, Part I and appropriate Schedules and Attachments.

Part VI:

"Part VI" shall mean Tariff, Part VI, sections 200 through 237 pertaining to the queuing, study, and agreements relating to New Service Requests, and the rights associated with Customer-Funded Upgrades in conjunction with the applicable Common Service Provisions of Tariff, Part I and appropriate Schedules and Attachments.

Part VII:

"Part VII" shall mean Tariff, Part VII, sections 300 through 337 pertaining to generation or merchant transmission interconnection to the Transmission System in conjunction with the applicable Common Service Provisions of Tariff, Part I and appropriate Schedules and Attachments.

Part VIII:

"Part VIII" shall mean Tariff, Part VIII, sections 400 through 435 pertaining to generation or merchant transmission interconnection to the Transmission System in conjunction with the applicable Common Service Provisions of Tariff, Part I and appropriate Schedules and Attachments.

Part IX:

"Part IX" shall mean Tariff, Part IX, section 500 and Subparts A through L pertaining to generation or merchant transmission interconnection to the Transmission System in conjunction with the applicable Common Service Provisions of Tariff, Part I and appropriate Schedules and Attachments.

Parties:

"Parties" shall mean the Transmission Provider, as administrator of the Tariff, and the Transmission Customer receiving service under the Tariff. PJMSettlement shall be the Counterparty to Transmission Customers.

Permissible Technological Advancement:

"Permissible Technological Advancement" shall mean a proposed technological change such as an advancement to turbines, inverters, plant supervisory controls or other similar advancements to the technology proposed in the Interconnection Request that is submitted to the Transmission Provider no later than the end of Decision Point II. Provided such change may not: (i) increase the capability of the Generating Facility or Merchant Transmission Facility as specified in the original Interconnection Request; (ii) represent a different fuel type from the original Interconnection Request; or (iii) cause any material adverse impact(s) on the Transmission System with regard to short circuit capability limits, steady-state thermal and voltage limits, or dynamic system stability and response. If the proposed technological advancement is a Permissible Technological Advancement, no additional study will be necessary and the proposed technological advancement will not be considered a Material Modification.

Phase I

"Phase I" shall start on the first Business Day immediately after the close of the Application Phase of a Cycle, but no earlier than 30 calendar days following the distribution of the Phase I System Impact Study Base Case Data. During Phase I, Transmission Provider shall conduct the Phase I System Impact Study.

Phase I System Impact Study:

"Phase I System Impact Study" shall mean System Impact Study conducted during the Phase I System Impact Study Phase.

Phase II

"Phase II" shall start on the first Business Day immediately after the close of Decision Point I Phase unless the Decision Point III of the immediately preceding Cycle is still open. In no event, shall Phase II of a Cycle commence before the conclusion of Decision Point III of the immediately preceding Cycle. During Phase II, Transmission Provider shall conduct the Phase II System Impact Study.

Phase II System Impact Study:

"Phase II System Impact Study" shall mean System Impact Study conducted during the Phase II System Impact Study Phase.

Phase III

"Phase III" shall start on the first Business Day immediately after the close of Decision Point II, unless the Final Agreement Negotiation Phase of the immediately preceding Cycle is still open. In no event shall Phase III of a Cycle commence before the conclusion of the Final Agreement Negotiation Phase of the immediately preceding Cycle. During Phase III, Transmission Provider shall conduct the Phase III System Impact Study.

Phase III System Impact Study:

"Phase III System Impact Study" shall mean System Impact Study conducted during Phase III.

PJM:

"PJM" shall mean PJM Interconnection, L.L.C., including the Office of the Interconnection as referenced in the PJM Operating Agreement. When such term is being used in the RAA it shall also include the PJM Board.

PJM Manuals:

"PJM Manuals" shall mean the instructions, rules, procedures and guidelines established by the Office of the Interconnection for the operation, planning, and accounting requirements of the PJM Region and the PJM Interchange Energy Market.

PJM Region:

"PJM Region" shall have the meaning specified in the Operating Agreement.

PJM Tariff, Tariff, O.A.T.T., OATT or PJM Open Access Transmission Tariff:

"PJM Tariff," "Tariff," "O.A.T.T.," "OATT," or "PJM Open Access Transmission Tariff" shall mean that certain PJM Open Access Transmission Tariff, including any schedules, appendices or exhibits attached thereto, on file with FERC and as amended from time to time thereafter.

Point of Change in Ownership:

"Point of Change in Ownership" shall mean the point, as set forth Schedule B of the Generation Interconnection Agreement, where the Project Developer's Interconnection Facilities connect to the Transmission Owner's Interconnection Facilities.

Point of Interconnection:

"Point of Interconnection" shall mean the point or points where the Interconnection Facilities connect with the Transmission System.

Project Developer:

"Project Developer" shall mean a Generation Project Developer and/or a Transmission Project Developer.

Project Developer Interconnection Facilities:

"Project Developer Interconnection Facilities" shall mean all facilities and equipment owned and/or controlled, operated and maintained by Project Developer on Project Developer's side of the Point of Change of Ownership identified in the Schedule B of the Generation Interconnection Agreement, including any modifications, additions, or upgrades made to such facilities and equipment, that are necessary to physically and electrically interconnect the Generating Facility with the Transmission System.

Project Finance Entity:

"Project Finance Entity" shall mean: (a) a holder, trustee or agent for holders, of any component of Project Financing; or (b) any purchaser of capacity and/or energy produced by the Generating Facility to which Project Developer has granted a mortgage or other lien as security for some or all of Project Developer's obligations under the corresponding power purchase agreement.

Provisional Interconnection Service:

"Provisional Interconnection Service" shall mean interconnection service provided by Transmission Provider associated with interconnecting the Project Developer's Generating Facility to Transmission Provider's Transmission System and enabling that Transmission System to receive electric energy and capacity from the Generating Facility at the Point of Interconnection pursuant to the terms of the Interconnection Service Agreement and, if applicable, the Tariff.

Qualifying Facility:

"Qualifying Facility" shall mean means an electric energy generating facility that complies with the qualifying facility definition established by Public Utility Regulatory Policies Act ("PURPA") and any FERC rules as amended from time to time (18 C.F.R. part 292, section 292.203 et seq.)

implementing PURPA and, to the extent required to obtain or maintain Qualifying Facility status, is self-certified as a Qualifying Facility or is certified as a Qualified Facility by the FERC.

Readiness Deposit:

"Readiness Deposit" shall mean the deposit or deposits required by Tariff, Part VII, Subpart A, section 301(A)(3)(b).

Reasonable Efforts:

"Reasonable Efforts" shall mean, with respect to any action required to be made, attempted, or taken by an Interconnection Party under the Tariff, Part VII, a Generation Interconnection Agreement, or a Construction Service Agreement, such efforts as are timely and consistent with Good Utility Practice and with efforts that such party would undertake for the protection of its own interests.

Regional Entity:

"Regional Entity" shall have the same meaning specified in the Operating Agreement.

Regional Transmission Expansion Plan:

"Regional Transmission Expansion Plan" shall mean the plan prepared by the Office of the Interconnection pursuant to Operating Agreement, Schedule 6 for the enhancement and expansion of the Transmission System in order to meet the demands for firm transmission service in the PJM Region.

Reliability Assurance Agreement or PJM Reliability Assurance Agreement:

"Reliability Assurance Agreement" or "PJM Reliability Assurance Agreement" shall mean that certain Reliability Assurance Agreement Among Load Serving Entities in the PJM Region, on file with FERC as PJM Interconnection L.L.C. Rate Schedule FERC No. 44, and as amended from time to time thereafter.

Schedule of Work:

"Schedule of Work" shall mean that Schedule of Work set forth in section 8.0 of Schedule L of a GIA, or Appendix I of a CSA, as applicable, setting forth the timing of work to be performed by the Constructing Entity(ies), based upon the System Impact Study(ies) and subject to modification, as required, in accordance with Transmission Provider's scope change process for interconnection projects set forth in the PJM Manuals.

Scope of Work:

"Scope of Work" shall mean that scope of the work set forth in Specification section 3.0 of the GIA to be performed by the Constructing Entity(ies) pursuant to the Interconnection Construction

Service Agreement, provided that such Scope of Work may be modified, as required, in accordance with Transmission Provider's scope change process for interconnection projects set forth in the PJM Manuals.

Secondary Systems:

"Secondary Systems" shall mean control or power circuits that operate below 600 volts, AC or DC, including, but not limited to, any hardware, control or protective devices, cables, conductors, electric raceways, secondary equipment panels, transducers, batteries, chargers, and voltage and current transformers.

Security:

"Security" shall mean the financial guaranty provided by the Project Developer, Eligible Customer or Upgrade Customer pursuant to Tariff, Part VII, Subpart D, sections 309(A)(2)(i), 309(A)(3)(a), 311(a)(2)(d)(i)(a). 311(A)(2)(h), and 313(A)(1)(a), to secure the Project Developer's, Eligible Customer's or Upgrade Customer responsibility for Costs under an interconnection-related agreement set forth in Tariff, Part IX.

Service Agreement:

"Service Agreement" shall mean the initial agreement and any amendments or supplements thereto entered into by the Transmission Customer and the Transmission Provider for service under the Tariff.

Site:

"Site" shall mean all of the real property including, but not limited to, any owned or leased real property, bodies of water and/or submerged land, and easements, or other forms of property rights acceptable to PJM, on which the Generating Facility or Merchant Transmission Facility is situated and/or on which the Project Developer Interconnection Facilities are to be located.

Site Control:

"Site Control" shall mean the evidentiary documentation provided by Project Developer in relation to a New Service Request demonstrating the requirements as set forth in the following Tariff, Part VII, Subpart A, section 302, and Tariff, Part VII, Subpart C, section 306, and Subpart D, sections 309 and 313.

Stand Alone Network Upgrades:

"Stand Alone Network Upgrades" shall mean Network Upgrades, which are not part of an Affected System, which a Project Developer may construct without affecting day-to-day operations of the Transmission System during their construction. Transmission Provider, Transmission Owner and Project Developer must agree as to what constitutes Stand Alone Network Upgrades and identify them in Specifications section 3.0 of Appendix L of the GIA. If the Transmission Provider or

Transmission Owner and Project Developer disagree about whether a particular Network Upgrade is a Stand Alone Network Upgrade, the Transmission Provider or Transmission Owner that disagrees with the Project Developer must provide the Project Developer a written technical explanation outlining why the Transmission Provider or Transmission Owner does not consider the Network Upgrade to be a Stand Alone Network Upgrade within 15 days of its determination.

State:

"State" shall mean the District of Columbia and any State or Commonwealth of the United States.

State of Charge:

"State of Charge" shall mean the operating parameter that represents the quantity of physical energy stored (measured in units of megawatt-hours) in an Energy Storage Resource Model Participant in proportion to its maximum State of Charge capability. State of Charge is quantified as defined in the PJM Manuals.

Station Power:

"Station Power" shall mean energy used for operating the electric equipment on the site of a generation facility located in the PJM Region or for the heating, lighting, air-conditioning and office equipment needs of buildings on the site of such a generation facility that are used in the operation, maintenance, or repair of the facility. Station Power does not include any energy (i) used to power synchronous condensers; (ii) used for pumping at a pumped storage facility; (iii) used in association with restoration or black start service; or (iv) that is Direct Charging Energy.

Study Deposit:

"Study Deposit" shall mean the payment in the form of cash required to initiate and fund any study provided for in Tariff, Part VII, Subpart A, section 301(A)(3)(a).

Surplus Project Developer:

"Surplus Project Developer" shall mean either a Project Developer whose Generating Facility is already interconnected to the PJM Transmission System or one of its affiliates, or an unaffiliated entity that submits a Surplus Interconnection Request to utilize Surplus Interconnection Service within the Transmission System in the PJM Region.

Surplus Interconnection Service:

"Surplus Interconnection Service" shall mean any unneeded portion of Interconnection Service established in a Generation Interconnection Agreement, such that if Surplus Interconnection Service is utilized, the total amount of Interconnection Service at the Point of Interconnection would remain the same.

Switching and Tagging Rules:

"Switching and Tagging Rules" shall mean the switching and tagging procedures of Transmission Owners and Project Developer as they may be amended from time to time.

System Impact Study:

"System Impact Study" shall mean an assessment(s) by the Transmission Provider of (i) the adequacy of the Transmission System to accommodate a New Service Request, (ii) whether any additional costs may be incurred in order to provide such transmission service or to accommodate a New Service Request, and (iii) an estimated date that the New Service Requests can be interconnected with the Transmission System and an estimate of the cost responsibility for the interconnection of the New Service Request; and (iv) with respect to an Upgrade Request, the estimated cost of the requested system upgrades or expansion, or of the cost of the system upgrades or expansion, necessary to provide the requested incremental rights.

System Protection Facilities:

"System Protection Facilities" shall refer to the equipment required to protect (i) the Transmission System, other delivery systems and/or other generating systems connected to the Transmission System from faults or other electrical disturbance occurring at or on the Generating Facility, and (ii) the Generating Facility from faults or other electrical system disturbance occurring on the Transmission System or on other delivery systems and/or other generating systems to which the Transmission System is directly or indirectly connected. System Protection Facilities shall include such protective and regulating devices as are identified in the Applicable Technical Requirements and Standards or that are required by Applicable Laws and Regulations or other Applicable Standards, or as are otherwise necessary to protect personnel and equipment and to minimize deleterious effects to the Transmission System arising from the Generating Facility.

Transition Date:

"Transition Date" shall mean the later of: (i) the effective date of Transmission Provider's Docket Nos. ER22-2110-000, -001 transition cycle filing seeking FERC acceptance of this Tariff, Part VII or (ii) the date by which all AD2 and prior queue window Interconnection Service Agreements or wholesale market participation agreements have been executed or filed unexecuted.

Transmission Facilities:

"Transmission Facilities" shall have the meaning set forth in the Operating Agreement.

Transmission Injection Rights:

"Transmission Injection Rights" shall mean Capacity Transmission Injection Rights and Energy Transmission Injection Rights.

Transmission Interconnection Request:

"Transmission Interconnection Request" shall mean a request by a Transmission Interconnection Project Developer pursuant to Tariff, Part VII, Subpart C, section 306(A)(4) to interconnect or add Merchant Transmission Facilities to the Transmission System or to increase the capacity of existing Merchant Transmission Facilities interconnected with the Transmission System in the PJM Region.

Transmission Owner:

"Transmission Owner" shall mean a Member that owns or leases with rights equivalent to ownership Transmission Facilities and is a signatory to the PJM Transmission Owners Agreement. Taking transmission service shall not be sufficient to qualify a Member as a Transmission Owner.

Transmission Owner Interconnection Facilities:

"Transmission Owner Interconnection Facilities" shall mean all Interconnection Facilities that are not Project Developer Interconnection Facilities and that, after the transfer under Appendix 2, section 23.3.5 of the GIA to the Transmission Owner of title to any Transmission Owner Interconnection Facilities that the Project Developer constructed, are owned, controlled, operated and maintained by the Transmission Owner on the Transmission Owner's side of the Point of Change of Ownership identified in appendices to the Generation Interconnection Agreement and if applicable, the Interconnection Construction Service Agreement, including any modifications, additions or upgrades made to such facilities and equipment, that are necessary to physically and electrically interconnect the Generating Facility with the Transmission System or interconnected distribution facilities.

Transmission Owner Upgrades:

"Transmission Owner Upgrades" shall mean Distribution Upgrades, Merchant Transmission Upgrades, Network Upgrades and Stand-Alone Network Upgrades.

Transmission Project Developer:

"Transmission Project Developer" shall mean an entity that submits a request to interconnect or add Merchant Transmission Facilities to the Transmission System or to increase the capacity of Merchant Transmission Facilities interconnected with the Transmission System in the PJM Region.

Transmission Provider:

The "Transmission Provider" shall be the Office of the Interconnection for all purposes, provided that the Transmission Owners will have the responsibility for the following specified activities:

(a) The Office of the Interconnection shall direct the operation and coordinate the maintenance of the Transmission System, except that the Transmission Owners will continue to direct the

operation and maintenance of those transmission facilities that are not listed in the PJM Designated Facilities List contained in the PJM Manual on Transmission Operations;

(b) Each Transmission Owner shall physically operate and maintain all of the facilities that it owns; and

(c) When studies conducted by the Office of the Interconnection indicate that enhancements or modifications to the Transmission System are necessary, the Transmission Owners shall have the responsibility, in accordance with the applicable terms of the Tariff, Operating Agreement and/or the Consolidated Transmission Owners Agreement to construct, own, and finance the needed facilities or enhancements or modifications to facilities.

Transmission Service:

"Transmission Service" shall mean Point-To-Point Transmission Service provided under Tariff, Part II on a firm and non-firm basis.

Transmission System:

"Transmission System" shall mean the facilities controlled or operated by the Transmission Provider within the PJM Region that are used to provide transmission service under Tariff, Part II and Part III.

Transmission Withdrawal Rights:

"Transmission Withdrawal Rights" shall mean Firm Transmission Withdrawal Rights and Non-Firm Transmission Withdrawal Rights.

Upgrade Customer:

"Upgrade Customer" shall mean an entity that submits an Upgrade Request pursuant to Operating Agreement, Schedule 1, section 7.8, and the parallel provisions of Tariff, Attachment K-Appendix, section 7.8, or that submits an Upgrade Request for Merchant Network Upgrades (including accelerating the construction of any transmission enhancement or expansion, other than Merchant Transmission Facilities, that is included in the Regional Transmission Expansion Plan prepared pursuant to Operating Agreement, Schedule 6).

Upgrade Request:

"Upgrade Request" shall mean a request submitted in the form prescribed in Tariff, Part IX, Subpart K, for evaluation by the Transmission Provider of the feasibility and estimated costs of (a) a Merchant Network Upgrade or (b) the Customer-Funded Upgrades that would be needed to provide Incremental Auction Revenue Rights specified in a request pursuant to Operating Agreement, Schedule 1, section 7.8, and the parallel provisions of Tariff, Attachment K-Appendix, section 7.8.

Valid Upgrade Request:

"Valid Upgrade Request" shall mean an Upgrade Request that has been determined by Transmission Provider to meet the requirements of Tariff, Part VII, Subpart C, section 306 (application requirements).

Wholesale Market Participation Agreement ("WMPA"):

"Wholesale Market Participation Agreement" ("WMPA") shall mean the form of agreement intended to allow a Project Developer to effectuate in wholesale sales in the PJM markets. A form of the WMPA is set forth in Tariff, Part IX, Subpart C.

Wholesale Transaction:

"Wholesale Transaction" shall mean any transaction involving the transmission or sale for resale of electricity in interstate commerce that utilizes any portion of the Transmission System.

APPENDIX 2

STANDARD TERMS AND CONDITIONS FOR INTERCONNECTIONS

1 Commencement, Term of and Conditions Precedent to Interconnection Service

1.1 Commencement Date:

The effective date of a Generation Interconnection Agreement shall be the date provided in section 4.0 of the Generation Interconnection Agreement. Interconnection Service under this Generation Interconnection Agreement shall commence upon the satisfaction of the conditions precedent set forth in section 1.2 below.

1.2 Conditions Precedent:

The following conditions must be satisfied prior to the commencement of Interconnection Service under this Generation Interconnection Agreement:

(a) This Generation Interconnection Agreement, if filed with FERC, shall have been accepted for filing by the FERC;

(b) All requirements for Initial Operation as specified in section 1.4 below shall have been met and Initial Operation of the Generating Facility or Merchant Transmission Facility shall have been completed.

(c) Project Developer shall be in compliance with all Applicable Technical Requirements and Standards for interconnection under the Tariff (as determined by the Transmission Provider).

1.3 Term:

This Generation Interconnection Agreement shall remain in full force and effect until it is terminated in accordance with section 16 of this Appendix 2.

1.4 Initial Operation:

The following requirements shall be satisfied prior to Initial Operation of the Generating Facility or Merchant Transmission Facility:

1.4.1 The construction of all Interconnection Facilities and Transmission Owner Upgrades necessary for the interconnection of the Generating Facility or Merchant Transmission Facility has been completed;

1.4.2 The Transmission Owner has accepted any Interconnection Facilities and Stand Alone Network Upgrades constructed by Project Developer pursuant to this GIA;

1.4.3 The Project Developer and the Transmission Owner have all necessary systems and personnel in place to allow for parallel operation of their respective facilities;

1.4.4 The Transmission Owner has received all applicable documentation for the Interconnection Facilities built by the Project Developer, certified as correct, including, but not limited to, access

to the field copy of marked-up drawings reflecting the as-built condition, pre-operation test reports, and instruction books; and

1.4.5 Project Developer shall have received any necessary authorization from Transmission Provider to synchronize with the Transmission System or to energize, as applicable per the determination of Transmission Provider, the Generating Facility or Merchant Transmission Facility and Interconnection Facilities.

1.4A Other Interconnection Options

1.4A.1 Limited Operation:

If any of the Transmission Owner Interconnection Facilities and Transmission Owner Upgrades are not reasonably expected to be completed prior to the Project Developer's planned date of Initial Operation, and provided that the Transmission Owner has accepted the Project Developer Interconnection Facilities pursuant to this GIA, Transmission Provider shall, upon the request and at the expense of Project Developer, perform appropriate power flow or other operating studies on a timely basis to determine the extent to which the Generating Facility or Merchant Transmission Facility and the Project Developer Interconnection Facilities may operate prior to the completion of the Transmission Owner Interconnection Facilities and Transmission Owner Upgrades consistent with Applicable Laws and Regulations, Applicable Reliability Standards, Good Utility Practice, and the Generation Interconnection Agreement. In accordance with the results of such studies and subject to such conditions as Transmission Provider determines to be reasonable and appropriate, Transmission Provider shall (a) permit Project Developer to operate the Generating Facility or Merchant Transmission Facility and the Project Developer Interconnection Facilities, and (b) grant Project Developer limited, interim Interconnection Rights commensurate with the extent to which operation of the Generating Facility or Merchant Transmission Facility is permitted.

1.4A.2 Provisional Interconnection Service:

Upon the request of Project Developer, and prior to completion of requisite Interconnection Facilities, Distribution Upgrades, Network Upgrades, Stand Alone Network Upgrades, or system protection facilities Project Developer may request limited Interconnection Service at the discretion of Transmission Provider based upon an evaluation that will consider the results of available studies, which terms shall be memorialized in the Generation Interconnection Agreement to be tendered by Transmission Provider to Project subject to the execution timelines and provisions set forth in Tariff, Part IX, section 500.

Transmission Provider shall determine, through available studies or additional studies as necessary, whether stability, short circuit, thermal, and/or voltage issues would arise if Project Developer interconnects without modifications to the Generating Facility or Merchant Transmission Facility or the Transmission System. Transmission Provider shall determine whether any Interconnection Facilities, Network Upgrades, Distribution Upgrades, or Stand Alone Network Upgrades, or system protection facilities that are necessary to meet the requirements of NERC, or any applicable Regional Entity for the interconnection of a new, modified and/or

expanded Generating Facility or Merchant Transmission Facility are in place prior to the commencement of Interconnection Service from the Generating Facility or Merchant Transmission Facility. Where available studies indicate that such Interconnection Facilities, Network Upgrades, Distribution Upgrades, or Stand Alone Network Upgrades, and/or system protection facilities that are required for the interconnection of a new, modified and/or expanded Generating Facility or Merchant Transmission Facility are not currently in place, Transmission Provider will perform a study, at the Project Developer's expense, to confirm the facilities that are required for Provisional Interconnection Service. The maximum permissible output of the Generating Facility or Merchant Transmission Facility shall be studied and updated annually and at the Project Developer's expense. The results will be communicated to the Project Developer in writing upon completion of the study. Project Developer assumes all risk and liabilities with respect to the Provisional Interconnection Service, including changes in output limits and Interconnection Facilities, Network Upgrades, Distribution Upgrades, or Stand Alone Network Upgrades, and/or system protection facilities cost responsibilities.

1.5 Survival:

The Generation Interconnection Agreement shall continue in effect after termination to the extent necessary to provide for final billings and payments; to permit the determination and enforcement of liability and indemnification obligations arising from acts or events that occurred while the Generation Interconnection Agreement was in effect; and to permit each Interconnection Party to have access to the real property, including but not limited to leased property and easements of the other Interconnection Parties pursuant to section 16 of this Appendix 2 to disconnect, remove or salvage its own facilities and equipment.

2 Interconnection Service

2.1 Scope of Service:

Interconnection Service shall be provided to the Project Developer at the Point of Interconnection (a) in the case of interconnection of the Generating Facility of a Generation Project Developer, up to the Maximum Facility Output, and (b) in the case of interconnection of the Merchant Transmission Facility of a Transmission Project Developer, up to the Nominal Rated Capability. The location of the Point of Interconnection shall be mutually agreed by the Interconnected Entities, provided, however, that if the Interconnected Entities are unable to agree on the Point of Interconnection, the Transmission Provider shall determine the Point of Interconnection, provided that Transmission Provider shall not select a Point of Interconnection that would impose excessive costs on either of the Interconnected Entities and shall take material system reliability considerations into account in such selection. Specifications for the Generating Facility or Merchant Transmission Facility and the location of the Point of Interconnection shall be set forth in an appendix to the Generation Interconnection Agreement and shall conform to those stated in the System Impact Study(ies).

2.2 Non-Standard Terms:

The standard terms and conditions of this Appendix 2 shall not apply, to such extent as Transmission Provider determines to be reasonably necessary to accommodate such circumstances, in the event that the Project Developer acquires an ownership interest in facilities which, under the standard terms and conditions of this GIA would be part of the Transmission Owner Interconnection Facilities and Transmission Owner Upgrades. In such circumstances and to the extent determined by Transmission Provider to be reasonably necessary, non-standard terms and conditions mutually agreed upon by all Interconnection Parties shall apply, subject to FERC and any other necessary regulatory acceptance or approval. In addition, a Project Developer that acquires an ownership interest in such facilities shall become, and shall remain for so long as it retains such interest, a signatory to the Consolidated Transmission Owners Agreement.

2.3 No Transmission Services:

The execution of a Generation Interconnection Agreement does not constitute a request for transmission service, or entitle Project Developer to receive transmission service, under Part II or Part III of the Tariff. Nor does the execution of a Generation Interconnection Agreement obligate the Transmission Owner or Transmission Provider to procure, supply or deliver to Project Developer or the Generating Facility or Merchant Transmission Facility any energy, capacity, Ancillary Services or Station Power (and any associated distribution services).

2.4 Use of Distribution Facilities:

To the extent that a Generation Project Developer uses distribution facilities for the purpose of delivering energy to the Transmission System, Interconnection Service under this Tariff shall include the construction and/or use of such distribution facilities. In such cases, to such extent as Transmission Provider determines to be reasonably necessary to accommodate such

circumstances, the Generation Interconnection Agreement may include non-standard terms and conditions mutually agreed upon by all Interconnection Parties as needed to conform with Applicable Laws and Regulations and Applicable Standards relating to such distribution facilities.

3 Modification of Facilities

3.1 General:

Subject to Applicable Laws and Regulations and to any applicable requirements or conditions of the Tariff and the Operating Agreement, either Interconnected Entity may undertake modifications to its facilities ("Planned Modifications"). In the event that an Interconnected Entity plans to undertake a modification, that Interconnected Entity, in accordance with Good Utility Practice, shall provide notice to the other Interconnection Parties with sufficient information regarding such modification, including any modification to its project that causes the project's capacity, location, configuration or technology to differ from any corresponding information provided in the Interconnection Request, so that the other Interconnection Parties may evaluate the potential impact of such modification prior to commencement of the work. The Interconnected Entity desiring to perform such modification shall provide the relevant drawings, plans, specifications and models to the other Interconnection Parties in advance of the beginning of the work. Transmission Provider and the applicable Interconnection Entity shall enter into a Necessary Studies Agreement, a form is located in the Tariff, Part IX, pursuant to which Transmission Provider agrees to conduct the necessary studies to determine whether the Planned Modifications will have a permanent material impact on the Transmission System or would constitute a Material Modification, and to identify the additions, modifications, or replacements to the Transmission System, if any, that are necessary, in accordance with Good Utility Practice and/or to maintain compliance with Applicable Laws and Regulations or Applicable Standards, to accommodate the Planned Modifications.

The Interconnected Entity shall provide the information required by the Necessary Study Agreement and provide the required deposit. Transmission Provider, upon completion of the Necessary Studies, shall provide the Interconnected Entity (i) the type and scope of the permanent material impact, if any, the Planned Modifications will have on the Transmission System; (ii) the additions, modifications, or replacements to the Transmission System required to accommodate the Planned Modifications; and (iii) a good faith estimate of the cost of the additions, modifications, or replacements to the Transmission System required to accommodate the Planned Modifications. In the event such Planned Modification have a permanent material impact on the Transmission System or would constitute a Material Modification, Project Developer shall then withdraw the proposed modification or proceed with a new Interconnection Request for such modification.

3.2 Interconnection Request:

This section 3 shall not apply to any proposed modifications by Project Developer to its facilities for which Project Developer must make an Interconnection Request under the Tariff. In such circumstances, the Project Developer and Transmission Provider shall follow the requirements set forth in the GIP.

3.3 Standards:

Any additions, modifications, or replacements made to an Interconnected Entity's facilities shall be constructed and operated in accordance with Good Utility Practice, Applicable Standards and Applicable Laws and Regulations.

3.4 Modification Costs:

Unless otherwise required by Applicable Laws and Regulations or this Appendix 2 and, with respect to a Transmission Project Developer, subject to the terms of the GIP,:

(a) Project Developer shall not be responsible for the costs of any additions, modifications, or replacements that the Transmission Owner in its discretion or at the direction of Transmission Provider makes to the Interconnection Facilities and Transmission Owner Upgrades or the Transmission System in order to facilitate the interconnection of a third party to the Interconnection Facilities and Transmission Owner Upgrades or the Transmission System, or to provide transmission service under the Tariff to a third party.

(b) Project Developer shall be responsible for the costs of any additions, modifications, or replacements to the Interconnection Facilities and Transmission Owner Upgrades or the Transmission System that are required, in accord with Good Utility Practice and/or to maintain compliance with Applicable Laws and Regulations or Applicable Standards, in order to accommodate additions, modifications, or replacements made by Project Developer to the Generating Facility or Merchant Transmission Facility or to the Project Developer Interconnection Facilities.

(c) Project Developer shall be responsible for the costs of any additions, modifications, or replacements to the Project Developer Interconnection Facilities or the Generating Facility or Merchant Transmission Facility that are required, in accord with Good Utility Practice and/or to maintain compliance with Applicable Laws and Regulations or Applicable Standards, in order to accommodate additions, modifications, or replacements that Transmission Provider or the Transmission Owner makes to the Transmission System or to the Transmission Owner Interconnection Facilities and Transmission Owner Upgrades, but only to the extent that Transmission Provider's or the Transmission Owner's changes to the Transmission System or the Transmission Owner Interconnection Facilities and Transmission Owner Upgrades are made pursuant to Good Utility Practice and/or to maintain compliance with Applicable Laws and Regulations or Applicable Standards.

4 Operations

4.1 General:

Each Interconnected Entity shall operate, or shall cause operation of, its facilities in a safe and reliable manner in accord with (i) the terms of this Appendix 2; (ii) Applicable Standards; (iii) applicable rules, procedures and protocols set forth in the Tariff and the Operating Agreement, as any or all may be amended from time to time; (iv) Applicable Laws and Regulations, and (v) Good Utility Practice.

4.1.1 Project Developer Initial Drawings:

On or before the applicable date specified in the Milestones of the Generation Interconnection Agreement, Project Developer shall submit to the Transmission Owner and Transmission Provider initial drawings, certified by a professional engineer, of the Project Developer Interconnection Facilities. Transmission Owner and Transmission Provider shall review the drawings to assess the consistency of Project Developer's design of the Project Developer Interconnection Facilities with the design that was analyzed in the planning model as described in PJM Manuals. After consulting with the Transmission Owner, Transmission Provider shall provide comments on the drawings to Project Developer within 45 days after its receipt thereof, after which time any drawings not subject to comment shall be deemed to be approved. All drawings provided hereunder shall be deemed to be Confidential Information.

4.1.1.1 Effect of Review:

Transmission Owner's and Transmission Provider's reviews of Project Developer's initial drawings of the Project Developer Interconnection Facilities shall not be construed as confirming, endorsing or providing a warranty as to the fitness, safety, durability or reliability of such facilities or the design thereof. At its sole cost and expense, Project Developer shall make such changes to the design of the Project Developer Interconnection Facilities as may reasonably be required by Transmission Provider, in consultation with the Transmission Owner, to ensure that the Project Developer Interconnection Facilities meet Applicable Standards and, to the extent that design of the Project Developer Interconnection Facilities is included in the System Impact Study(ies), to ensure that such facilities conform with the System Impact Study(ies).

4.1.2 Project Developer "As-Built" Drawings:

Within 120 days after the date of Initial Operation, unless the Interconnection Parties agree on another mutually acceptable deadline, the Project Developer shall deliver to the Transmission Provider and the Transmission Owner final, "as-built" drawings, information and documents regarding the Project Developer Interconnection Facilities, including, as and to the extent applicable: a one-line diagram, a site plan showing the Generating Facility or Merchant Transmission Facility and the Project Developer Interconnection Facilities, plan and elevation drawings showing the layout of the Project Developer Interconnection Facilities, a relay functional diagram, relaying AC and DC schematic wiring diagrams and relay settings for all facilities associated with the Project Developer's step-up transformers, the facilities connecting the

Generating Facility or Merchant Transmission Facility to the step-up transformers and the Project Developer Interconnection Facilities, and the impedances (determined by factory tests) for the associated step-up transformers and the Generating Facility or Merchant Transmission Facility. As applicable, the Project Developer shall provide Transmission Provider and the Transmission Owner Specifications for the excitation system, automatic voltage regulator, Generating Facility or Merchant Transmission Facility control and protection settings, transformer tap settings, and communications. Transmission Provider and Transmission Owner shall have the right to review such drawings, and charge Project Developer their actual costs of conducting such review.

4.2 Project Developer Obligations:

Project Developer shall obtain Transmission Provider's approval prior to either synchronizing with the Transmission System or energizing, as applicable per the determination of Transmission Provider, the Generating Facility or Merchant Transmission Facility or, except in an Emergency Condition, disconnecting the Generating Facility or Merchant Transmission Facility from the Transmission System, and shall coordinate such synchronizations, energizations, and disconnections with the Transmission Owner.

4.3 Transmission Project Developer Obligations:

A Transmission Project Developer that will be a Merchant Transmission Provider is subject to the terms and conditions in the GIP.

4.4 Permits and Rights-of-Way:

Each Interconnected Entity at its own expense shall maintain in full force and effect all permits, licenses, rights-of-way and other authorizations as may be required to maintain the Generating Facility or Merchant Transmission Facility and the Interconnection Facilities and Transmission Owner Upgrades that the entity owns, operates and maintains and, upon reasonable request of the other Interconnected Entity, shall provide copies of such permits, licenses, rights-of-way and other authorizations at its own expense to the requesting party.

4.5 No Ancillary Services:

Except as provided in section 4.6 of this Appendix 2, nothing in this Appendix 2 is intended to obligate the Project Developer to supply Ancillary Services to either Transmission Provider or the Transmission Owner.

4.6 Reactive Power and Primary Frequency Response

4.6.1 Reactive Power

4.6.1.1 Reactive Power Design Criteria

4.6.1.1.1 New Facilities:

For all new Generating Facilities to be interconnected pursuant to the Tariff, other than wind-powered and other non-synchronous generation facilities, the Generation Project Developer shall design its Generating Facility to maintain a composite power delivery at continuous rated power output at a power factor of at least 0.95 leading to 0.90 lagging. For all new wind-powered and other non-synchronous generation facilities the Generation Project Developer shall design its Generating Facility with the ability to maintain a composite power delivery at a power factor of at least 0.95 leading to 0.95 lagging across the full range of continuous rated power output. For all wind-powered and other non-synchronous generation facilities that submitted a New Services Request on or after November 1, 2016, the power factor requirement shall be measured at the high-side of the facility substation transformers. This power factor range standard shall be dynamic and can be met using, for example, power electronics designed to supply this level of reactive capability (taking into account any limitations due to voltage level, real power output, etc.) or fixed and switched capacitors, or a combination of the two.

For new generation resources of more than 20 MW, other than wind-powered and other non-synchronous Generating Facilities, the power factor requirement shall be measured at the generator's terminals. For new generation resources of 20 MW or less the power factor requirement shall be measured at the Point of Interconnection. Any different reactive power design criteria that Transmission Provider determines to be appropriate for a wind-powered or other non-synchronous generation facility shall be stated in the Generation Interconnection Agreement.

A Transmission Project Developer interconnecting Merchant D.C. Transmission Facilities and/or Controllable A.C. Merchant Transmission Facilities shall design its Generating Facility to maintain a power factor at the Point of Interconnection of at least 0.95 leading and 0.95 lagging, when the Generating Facility is operating at any level within its approved operating range.

4.6.1.1.2 Increases in Generating Capacity or Energy Output:

All increases in the capacity or energy output of any generation facility interconnected with the Transmission System, other than wind-powered and other non-synchronous Generating Facilities, shall be designed with the ability to maintain a composite power delivery at continuous rated power output at a power factor for all incremental MW of capacity or energy output, of at least 1.0 (unity) to 0.90 lagging. Wind-powered generation facilities and other non-synchronous generation facilities that submitted a New Services Request on or after November 1, 2016, shall be designed with the ability to maintain a composite power delivery at a power factor for all incremental MW of capacity or energy output of at least 0.95 leading to 0.95 lagging measured at the high-side of the facility substation transformers across the full range of continuous rated power output. This power factor range standard shall be dynamic and can be met using, for example, power electronics designed to supply this level of reactive capability (taking into account any limitations due to voltage level, real power output, etc.) or fixed and switched capacitors, or a combination of the two.

The power factor requirement associated with increases in capacity or energy output of more than 20 MW to synchronous generation facilities interconnected with the Transmission System shall be measured at the generator's terminals. The power factor requirement associated with increases in capacity or energy output of 20 MW or less to synchronous generation facilities interconnected to

the Transmission System shall be measured at the Point of Interconnection; however, if the aggregate capacity or energy output of Generating Facility is or will be more than 20 MW, the power factor requirement shall be measure at the generator's terminals.

4.6.1.2 Obligation to Supply Reactive Power:

Project Developer agrees, as and when so directed by Transmission Provider or when so directed by the Transmission Owner acting on behalf or at the direction of Transmission Provider, to operate the Generating Facility to produce reactive power within the design limitations of the Generating Facility pursuant to voltage schedules, reactive power schedules or power factor schedules established by Transmission Provider or, as appropriate, the Transmission Owner. Transmission Provider shall maintain oversight over such schedules to ensure that all sources of reactive power in the PJM Region, as applicable, are treated in an equitable and not unduly discriminatory manner. Project Developer agrees that Transmission Provider and the Transmission Owner, acting on behalf or at the direction of Transmission Provider, may make changes to the schedules that they respectively establish as necessary to maintain the reliability of the Transmission System.

4.6.1.3 Deviations from Schedules:

In the event that operation of the Generating Facility or Merchant Transmission Facility of an Project Developer causes the Transmission System or the Transmission Owner's facilities to deviate from appropriate voltage schedules and/or reactive power schedules as specified by Transmission Provider or the Transmission Owner's operations control center (acting on behalf or at the direction of Transmission Provider), or that otherwise is inconsistent with Good Utility Practice and results in an unreasonable deterioration of the quality of electric service to other customers of Transmission Provider or the Transmission Owner, the Project Developer shall, upon discovery of the problem or upon notice from Transmission Provider or the Transmission Owner, acting on behalf or at the direction of Transmission Provider, take whatever steps are reasonably necessary to alleviate the situation at its expense, in accord with Good Utility Practice and within the reactive capability of the Generating Facility or Merchant Transmission Facility. In the event that the Project Developer does not alleviate the situation within a reasonable period of time following Transmission Provider's or the Transmission Owner's notice thereof, the Transmission Owner, with Transmission Provider's approval, upon notice to the Project Developer and at the Project Developer's expense, may take appropriate action, including installation on the Transmission System of power factor correction or other equipment, as is reasonably required, consistent with Good Utility Practice, to remedy the situation cited in Transmission Provider's or the Transmission Owner's notice to the Project Developer under this section.

4.6.1.4 Payment for Reactive Power:

Any payments to the Project Developer for reactive power shall be in accordance with Tariff, Schedule 2.

4.6.2 Primary Frequency Response:

Generation Project Developer shall ensure the primary frequency response capability of its

Generating Facility by installing, maintaining, and operating a functioning governor or equivalent controls. The term "functioning governor or equivalent controls" as used herein shall mean the required hardware and/or software that provides frequency responsive real power control with the ability to sense changes in system frequency and autonomously adjust the Generating Facility's real power output in accordance with the droop and deadband parameters and in the direction needed to correct frequency deviations. Generation Project Developer is required to install a governor or equivalent controls with the capability of operating: (1) with a maximum 5 percent droop and ±0.036 Hz deadband; or (2) in accordance with the relevant droop, deadband, and timely and sustained response settings from an approved NERC Reliability Standard providing for equivalent or more stringent parameters. The droop characteristic shall be: (1) based on the nameplate capacity of the Generating Facility, and shall be linear in the range of frequencies between 59 to 61 Hz that are outside of the deadband parameter; or (2) based an approved NERC Reliability Standard providing for an equivalent or more stringent parameter. The deadband parameter shall be: the range of frequencies above and below nominal (60 Hz) in which the governor or equivalent controls is not expected to adjust the Generating Facility's real power output in response to frequency deviations. The deadband shall be implemented: (1) without a step to the droop curve, that is, once the frequency deviation exceeds the deadband parameter, the expected change in the Generating Facility's real power output in response to frequency deviations shall start from zero and then increase (for under-frequency deviations) or decrease (for over-frequency deviations) linearly in proportion to the magnitude of the frequency deviation; or (2) in accordance with an approved NERC Reliability Standard providing for an equivalent or more stringent parameter. Generation Project Developer shall notify Transmission Provider that the primary frequency response capability of the Generating Facility has been tested and confirmed during commissioning. Once Generation Project Developer has synchronized the Generating Facility with the Transmission System, Generation Project Developer shall operate the Generating Facility consistent with the provisions specified in sections 4.6.2.1 and 4.6.2.2 of this agreement. The primary frequency response requirements contained herein shall apply to both synchronous and non-synchronous Generating Facilities.

4.6.2.1 Governor or Equivalent Controls:

Whenever the Generating Facility is operated in parallel with the Transmission System, Generation Project Developer shall operate the Generating Facility with its governor or equivalent controls in service and responsive to frequency. Generation Project Developer shall: (1) in coordination with Transmission Provider and/or the relevant balancing authority, set the deadband parameter to: (1) a maximum of ±0.036 Hz and set the droop parameter to a maximum of 5 percent; or (2) implement the relevant droop and deadband settings from an approved NERC Reliability Standard that provides for equivalent or more stringent parameters. Generation Project Developer shall be required to provide the status and settings of the governor or equivalent controls to Transmission Provider and/or the relevant balancing authority upon request. If Generation Project Developer needs to operate the Generating Facility with its governor or equivalent controls not in service, Generation Project Developer shall immediately notify Transmission Provider and the relevant balancing authority, and provide both with the following information: (1) the operating status of the governor or equivalent controls (i.e., whether it is currently out of service or when it will be taken out of service); (2) the reasons for removing the governor or equivalent controls from service; and (3) a reasonable estimate of when the governor or equivalent controls will be returned

to service. Generation Project Developer shall make Reasonable Efforts to return its governor or equivalent controls into service as soon as practicable. Generation Project Developer shall make Reasonable Efforts to keep outages of the Generating Facility's governor or equivalent controls to a minimum whenever the Generating Facility is operated in parallel with the Transmission System.

4.6.2.2 Timely and Sustained Response:

Generation Project Developer shall ensure that the Generating Facility's real power response to sustained frequency deviations outside of the deadband setting is automatically provided and shall begin immediately after frequency deviates outside of the deadband, and to the extent the Generating Facility has operating capability in the direction needed to correct the frequency deviation. Generation Project Developer shall not block or otherwise inhibit the ability of the governor or equivalent controls to respond and shall ensure that the response is not inhibited, except under certain operational constraints including, but not limited to, ambient temperature limitations, physical energy limitations, outages of mechanical equipment, or regulatory requirements. The Generating Facility shall sustain the real power response at least until system frequency returns to a value within the deadband setting of the governor or equivalent controls. A Commission-approved Reliability Standard with equivalent or more stringent requirements shall supersede the above requirements.

4.6.2.3 Exemptions:

Generating Facilities that are regulated by the United States Nuclear Regulatory Commission shall be exempt from sections 4.6.2, 4.6.2.1, and 4.6.2.2 of this agreement. Generating Facilities that are behind the meter generation that is sized-to-load (i.e., the thermal load and the generation are near-balanced in real-time operation and the generation is primarily controlled to maintain the unique thermal, chemical, or mechanical output necessary for the operating requirements of its host facility) shall be required to install primary frequency response capability in accordance with the droop and deadband capability requirements specified in section 4.6.2, but shall be otherwise exempt from the operating requirements in sections 4.6.2, 4.6.2.1, 4.6.2.2, and 4.6.2.4 of this agreement.

4.6.2.4 Energy Storage Resources:

Generation Project Developer interconnecting an Energy Storage Resource shall establish an operating range in Schedule I of this GIA that specifies a minimum state of charge and a maximum state of charge between which the Energy Storage Resource will be required to provide primary frequency response consistent with the conditions set forth in sections 4.6.2, 4.6.2.1, 4.6.2.2, and 4.6.2.3 of this agreement. Schedule I shall specify whether the operating range is static or dynamic, and shall consider (1) the expected magnitude of frequency deviations in the interconnection; (2) the expected duration that system frequency will remain outside of the deadband parameter in the interconnection; (3) the expected incidence of frequency deviations outside of the deadband parameter in the interconnection; (4) the physical capabilities of the Energy Storage Resource; (5) operational limitations of the Energy Storage Resource due to manufacturer specifications; and (6) any other relevant factors agreed to by Transmission Provider and Generation Project Developer, and in consultation with the relevant transmission owner or balancing authority as appropriate. If

the operating range is dynamic, then Schedule I must establish how frequently the operating range will be reevaluated and the factors that may be considered during its reevaluation.

Generation Project Developer's Energy Storage Resource is required to provide timely and sustained primary frequency response consistent with section 4.6.2.2 of this agreement when it is online and dispatched to inject electricity to the Transmission System and/or receive electricity from the Transmission System. This excludes circumstances when the Energy Storage Resource is not dispatched to inject electricity to the Transmission System and/or dispatched to receive electricity from the Transmission System. If Generation Project Developer's Energy Storage Resource is charging at the time of a frequency deviation outside of its deadband parameter, it is to increase (for over-frequency deviations) or decrease (for under-frequency deviations) the rate at which it is charging in accordance with its droop parameter. Generation Project Developer's Energy Storage Resource is not required to change from charging to discharging, or vice versa, unless the response necessitated by the droop and deadband settings requires it to do so and it is technically capable of making such a transition.

4.7 Under- and Over-Frequency and Under- and Over- Voltage Conditions:

The Generation Project Developer shall ensure "frequency ride through" capability and "voltage ride through" capability of its Generating Facility. The Generation Project Developer shall enable these capabilities such that its Generating Facility shall not disconnect automatically or instantaneously from the system or equipment of the Transmission Provider and any Affected Systems for a defined under-frequency or over-frequency condition, or an under-voltage or over-voltage condition, as tested pursuant to section 1.4.4 of Appendix 2 of this Generation Interconnection Agreement. The defined conditions shall be in accordance with Good Utility Practice and consistent with any standards and guidelines that are applied to other Generating Facilities in the PJM Region on a comparable basis. The Generating Facility's protective equipment settings shall comply with the Transmission Provider's automatic load-shed program. The Transmission Provider shall review the protective equipment settings to confirm compliance with the automatic load-shed program. The term "ride through" as used herein shall mean the ability of a Generating Facility to stay connected to and synchronized with the system or equipment of the Transmission Provider and any Affected Systems during system disturbances within a range of conditions, in accordance with Good Utility Practice and consistent with any standards and guidelines that are applied to other Generating Facilities in the Balancing Authority on a comparable basis. The term "frequency ride through" as used herein shall mean the ability of a Generation Project Developer's Generating Facility Generating Facility to stay connected to and synchronized with the Transmission System or equipment of the Transmission Provider and any Affected Systems during system disturbances within a range of under-frequency and over-frequency conditions, in accordance with Good Utility Practice and consistent with any standards and guidelines that are applied to other Generating Facilities in the PJM Region on a comparable basis. The term "voltage ride through" as used herein shall mean the ability of a Generating Facility to stay connected to and synchronized with the system or equipment of the Transmission Provider and any Affected Systems during system disturbances within a range of under-voltage and over-voltage conditions, in accordance with Good Utility Practice and consistent with any standards and guidelines that are applied to other Generating Facilities in the PJM Region on a comparable basis.

The Transmission System is designed to automatically activate a load-shed program as required by NERC and each Applicable Regional Entity in the event of an under-frequency system disturbance. A Generation Project Developer shall implement under-frequency and over-frequency relay set points for the Generating Facility as required by NERC and each Applicable Regional Entity to ensure "frequency ride through" capability of the Transmission System. The response of a Generation Project Developer's Generating Facility to frequency deviations of predetermined magnitudes, both under-frequency and over-frequency deviations shall be studied and coordinated with the Transmission Provider in accordance with Good Utility Practice.

4.8 System Protection and Power Quality:

4.8.1 System Protection:

Project Developer shall, at its expense, install, operate and maintain such System Protection Facilities as may be required in connection with operation of the Generating Facility or Merchant Transmission Facility and the Project Developer Interconnection Facilities consistent with Applicable Technical Requirements and Standards. Transmission Owner shall install any System Protection Facilities that may be required, as determined by Transmission Provider, on the Transmission Owner Interconnection Facilities and Transmission Owner Upgrades or the Transmission System in connection with the operation of the Generating Facility or Merchant Transmission Facility and the Project Developer Interconnection Facilities. Responsibility for the cost of any System Protection Facilities required on the Transmission Owner Interconnection Facilities and Transmission Owner Upgrades or the Transmission System shall be allocated as provided in the GIP.

4.8.2 Power Quality:

The Generating Facility or Merchant Transmission Facility and Project Developer Interconnection Facilities shall not cause excessive deviations from the power quality criteria set forth in the Applicable Technical Requirements and Standards.

4.9 Access Rights:

Each Interconnected Entity shall provide the other Interconnected Entity access to areas under its control as reasonably necessary to permit the other Interconnected Entity to perform its obligations under this Appendix 2, including operation and maintenance obligations. An Interconnected Entity that obtains such access shall comply with all safety rules applicable to the area to which access is obtained. Each Interconnected Entity agrees to inform the other Interconnected Entity's representatives of safety rules applicable to an area.

4.10 Switching and Tagging Rules:

The Interconnected Entities shall comply with applicable Switching and Tagging Rules in obtaining clearances for work or for switching operations on equipment. Such Switching and Tagging Rules shall be developed in accordance with OSHA standards codified at 29 C.F.R. part

1910, or successor standards. Each Interconnected Entity shall provide the other Interconnected Entity a copy of its Switching and Tagging Rules that are applicable to the other Interconnected Entity's activities.

4.11 Communications and Data Protocol:

The Interconnected Entities shall comply with any communications and data protocol that the Transmission Provider may establish.

4.12 Nuclear Generating Facilities:

In the event that the Generating Facility is a nuclear Generating Facility, the Interconnection Parties shall agree to such non-standard terms and conditions as are reasonably necessary to accommodate the Project Developer's satisfaction of Nuclear Regulatory Commission requirements relating to the safety and reliability of operations of such facilities.

5 Maintenance

5.1 General:

Each Interconnected Entity shall maintain, or shall cause the maintenance of, its facilities in a safe and reliable manner in accord with (i) the terms of this Appendix 2; (ii) Applicable Standards; (iii) applicable rules, procedures and protocols set forth in the Tariff and the Operating Agreement, as any or all may be amended from time to time; (iv) Applicable Laws and Regulations, and (v) Good Utility Practice.

5.2 Outage Authority and Coordination:

5.2.1 Coordination:

The Interconnection Parties agree to confer regularly to coordinate the planning, scheduling and performance of preventive and corrective maintenance on the Generating Facility or Merchant Transmission Facility, the Project Developer Interconnection Facilities and any Transmission Owner Interconnection Facilities. In the event an Interconnection Construction Service Agreement is required, the Construction Parties acknowledge and agree that certain outages of transmission facilities owned by the Transmission Owner, as more specifically detailed in the Scope of Work, may be necessary in order to complete the process of constructing and installing all Interconnection Facilities. The Interconnection Parties, and where applicable, any Construction Parties, further acknowledge and agree that any such outages shall be coordinated by and through the Transmission Provider.

5.2.2 Authority:

Each Interconnected Entity may, in accordance with Good Utility Practice, remove from service its facilities that may affect the other Interconnected Entity's facilities in order to perform maintenance or testing or to install or replace equipment. Except in the event of an Emergency Condition, the Project Developer proposing to remove such facilities from service shall provide prior notice of such activities to the Transmission Provider and the Transmission Owner, and the Interconnected Entities shall coordinate all scheduling of planned facility outages with Transmission Provider, in accordance with applicable sections of the Operating Agreement, the PJM Manuals and any other applicable operating guidelines or directives of the Transmission Provider. Subject to the foregoing, the Interconnected Entity scheduling a facility outage shall use Reasonable Efforts to coordinate such outage with the other Interconnected Entity's scheduled outages.

5.2.3 Outages Required for Maintenance:

Subject to any necessary approval by Transmission Provider, each Interconnected Entity shall provide necessary equipment outages to allow the other Interconnected Entity to perform periodic maintenance, repair or replacement of its facilities and such outages shall be provided at mutually agreeable times, unless conditions arise which an Interconnected Entity believes, in accordance with Good Utility Practice, may endanger persons or property.

5.2.4 Rescheduling of Planned Outages:

To the extent so provided by the Tariff, the Operating Agreement, and the PJM Manuals, an Interconnected Entity may seek compensation from Transmission Provider for any costs related to rejection by Transmission Provider of a request of such Interconnected Entity for a planned maintenance outage.

5.2.5 Outage Restoration:

If an outage on an Interconnected Entity's facilities adversely affects the other Interconnected Entity's facilities, the Interconnected Entity that owns or controls the facility that is out of service shall use Reasonable Efforts to restore the facility to service promptly.

5.3 Inspections and Testing:

Each Interconnected Entity shall perform routine inspection and testing of its facilities and equipment in accordance with Good Utility Practice as may be necessary to ensure the continued interconnection of the Generating Facility or Merchant Transmission Facility with the Transmission System in a safe and reliable manner. Each Interconnected Entity shall have the right, upon advance written notice, to request reasonable additional testing of an Interconnected Entity's facilities for good cause, as may be in accordance with Good Utility Practice.

5.4 Right to Observe Testing:

Each Interconnected Entity shall notify the other Interconnected Entity in advance of its performance of tests of its portion of the Interconnection Facilities. The other Interconnected Entity shall, at its own expense, have the right, but not the obligation, to:

(a) Observe the other Party's tests and/or inspection of any of its system protection facilities and other protective equipment, including power system stabilizers;

(b) Review the settings of the other Party's system protection facilities and other protective equipment;

(c) Review the other Party's maintenance record relative to the Interconnection Facilities, system protection facilities and other protective equipment; and

(d) Exercise these rights from time to time as it deems necessary upon reasonable notice to the other Party.

5.5 Secondary Systems:

Each Interconnected Entity agrees to cooperate with the other in the inspection, maintenance, and testing of those Secondary Systems directly affecting the operation of an Interconnected Entity's facilities and equipment which may reasonably be expected to affect the other Interconnected

Entity's facilities. Each Interconnected Entity shall provide advance notice to the other Interconnected Entity before undertaking any work on such equipment, especially in electrical circuits involving circuit breaker trip and close contacts, current transformers, or potential transformers.

5.6 Access Rights:

Each Interconnected Entity shall provide the other Interconnected Entity access to areas under its control as reasonably necessary to permit the other Interconnected Entity to perform its obligations under this Appendix 2, including operation and maintenance obligations. An Interconnected Entity that obtains such access shall comply with all safety rules applicable to the area to which access is obtained. Each Interconnected Entity agrees to inform the other Interconnected Entity's representatives of safety rules applicable to an area.

5.7 Observation of Deficiencies:

If an Interconnection Party observes any Abnormal Condition on, or becomes aware of a lack of scheduled maintenance and testing with respect to, an Interconnection Party's facilities and equipment that might reasonably be expected to adversely affect the observing Interconnection Party's facilities and equipment, the observing Interconnection Party shall provide prompt notice under the circumstances to the appropriate Interconnection Party, and such Interconnection Party shall consider such notice in accordance with Good Utility Practice. Any Interconnection Party's review, inspection, and approval related to the other Interconnection Party's facilities and equipment shall be limited to the purpose of assessing the safety, reliability, protection, and control of the Transmission System and shall not be construed as confirming or endorsing the design of such facilities and equipment, or as a warranty of any type, including safety, durability, or reliability thereof. Notwithstanding the foregoing, the observing Interconnection Party shall have no liability whatsoever for failure to give a deficiency notice to the other Interconnection Party and the Interconnected Entity that owns the relevant Interconnection Facilities and Transmission Owner Upgrades shall remain fully liable for its failure to determine and correct deficiencies and defects in its facilities and equipment.

6 Emergency Operations

6.1 Obligations:

Subject to Applicable Laws and Regulations, each Interconnection Party shall comply with the Emergency Condition procedures of NERC, the Applicable Regional Entity, Transmission Provider, the Transmission Owner and Project Developer.

6.2 Notice:

Each Interconnection Party shall notify the other parties promptly when it becomes aware of an Emergency Condition that may reasonably be expected to affect operation of the Generating Facility or Merchant Transmission Facility, the Project Developer Interconnection Facilities, the Transmission Owner Interconnection Facilities and Transmission Owner Upgrades, or the Transmission System. To the extent information is known, the notification shall describe the Emergency Condition, the extent of the damage or deficiency, the expected effect on the facilities and/or operation thereof, its anticipated duration and the corrective action taken and/or to be taken. The initial notice shall be followed as soon as practicable with written notice.

6.3 Immediate Action:

An Interconnection Party becoming aware of an Emergency Condition may take such action, including disconnection of the Generating Facility or Merchant Transmission Facility from the Transmission System, as is reasonable and necessary in accord with Good Utility Practice (i) to prevent, avoid, or mitigate injury or danger to, or loss of, life or property; (ii) to preserve the reliability of, in the case of Project Developer, the Generating Facility or Merchant Transmission Facility, or, in the case of Transmission Provider or the Transmission Owner, the Transmission System and interconnected sub-transmission and distribution facilities; or (iii) to expedite restoration of service. Unless, in Project Developer's reasonable judgment, immediate action is required to prevent imminent loss of life or property, Project Developer shall obtain the consent of Transmission Provider and the Transmission Owner prior to performing any manual switching operations at the Generating Facility or Merchant Transmission Facility or the Generation Interconnection Facilities. Each Interconnection Party shall use Reasonable Efforts to minimize the effect of its actions during an Emergency Condition on the facilities and operations of the other Interconnection Parties.

6.4 Record-Keeping Obligations:

Each Interconnection Party shall keep and maintain records of actions taken during an Emergency Condition that may reasonably be expected to affect the other parties' facilities and make such records available for audit in accordance with section 19.3 of this Appendix 2.

7 Safety

7.1 General:

Each Interconnected Entity and, as applicable, each Construction Party shall perform all work under this Appendix 2 that may reasonably be expected to affect the other Interconnected Entity and, as applicable, the other Construction Party in accordance with Good Utility Practice and all Applicable Laws and Regulations pertaining to the safety of persons or property. An Interconnected Entity and, as applicable, a Construction Party performing work within the boundaries of the other Interconnected Entity's facilities and, as applicable, the other Construction Party's facilities must abide by the safety rules applicable to the site. Each party agrees to inform the other party's representatives of applicable safety rules that must be obeyed on the premises. A Construction Party performing work within an area controlled by another Construction Party must abide by the safety rules applicable to the area.

7.2 Environmental Releases:

Each Interconnected Entity and, as applicable, each Construction Party shall notify the other Interconnection Parties and, as applicable, Construction Parties, first orally and promptly thereafter in writing, of the release of any Hazardous Substances, any asbestos or lead abatement activities, or any type of remediation activities, related to the Generating Facility or Merchant Transmission Facility or the Interconnection Facilities and Transmission Owner Upgrades, any of which may reasonably be expected to affect one or both of the other parties. The notifying party shall (i) provide the notice as soon as possible; (ii) make a good faith effort to provide the notice within 24 hours after the party becomes aware of the occurrence; and (iii) promptly furnish to the other parties copies of any publicly available reports filed with any governmental agencies addressing such events.

8 Metering

8.1 General:

Project Developer shall have the right to install, own, operate, test, and maintain the necessary Metering Equipment. In the event that Project Developer exercises this option, the Transmission Owner shall have the right to install its own check meter(s), at its own expense, at or near the location of the Metering Equipment. If both Project Developer and Transmission Owner install meters, the meter installed by the Project Developer shall control unless it is determined by testing to be inaccurate. If the Project Developer does not exercise the option provided by the first sentence of this section, the Transmission Owner shall have the option to install, own, operate, test and maintain all necessary Metering Equipment at Project Developer's expense. If the Transmission Owner does not exercise this option, the Project Developer shall install, own, operate, test and maintain all necessary Metering Equipment. Transmission Provider shall determine the location where the Metering Equipment shall be installed, after consulting with Project Developer and the Transmission Owner. All Metering Equipment shall be tested prior to any operation of the Generating Facility or Merchant Transmission Facility. Power flows to and from the Generating Facility or Merchant Transmission Facility shall be compensated to the Point of Interconnection, or, upon the mutual agreement of the Transmission Owner and the Project Developer, to another location.

8.2 Standards:

All Metering Equipment installed pursuant to this Appendix 2 to be used for billing and payments shall be revenue quality Metering Equipment and shall satisfy applicable ANSI standards and Transmission Provider's metering standards and requirements. Nothing in this Appendix 2 precludes the use of Metering Equipment for any retail services of the Transmission Owner provided, however, that in such circumstances Applicable Laws and Regulations shall control.

8.3 Testing of Metering Equipment:

The Interconnected Entity that, pursuant to section 8.1 of this Appendix 2, owns the Metering Equipment shall operate, maintain, inspect, and test all Metering Equipment upon installation and at least once every two years thereafter. Upon reasonable request by the other Interconnected Entity, the owner of the Metering Equipment shall inspect or test the Metering Equipment more frequently than every two years, but in no event more frequently than three times in any 24-month period. The owner of the Metering Equipment shall give reasonable notice to the Interconnection Parties of the time when any inspection or test of the owner's Metering Equipment shall take place, and the other parties may have representatives present at the test or inspection. If Metering Equipment is found to be inaccurate or defective, it shall be adjusted, repaired or replaced in order to provide accurate metering. Where the Transmission Owner owns the Metering Equipment, the expense of such adjustment, repair or replacement shall be borne by the Project Developer, except that the Project Developer shall not be responsible for such expenses where the inaccuracy or defect is caused by the Transmission Owner. If Metering Equipment fails to register, or if the measurement made by Metering Equipment during a test varies by more than 1 percent from the measurement made by the standard meter used in the test, the owner of the Metering Equipment

shall inform Transmission Provider, and the Transmission Provider shall inform the other Interconnected Entity, of the need to correct all measurements made by the inaccurate meter for the period during which the inaccurate measurements were made, if the period can be determined. If the period of inaccurate measurement cannot be determined, the correction shall be for the period immediately preceding the test of the Metering Equipment that is equal to one-half of the time from the date of the last previous test of the Metering Equipment, provided that the period subject to correction shall not exceed nine months.

8.4 Metering Data:

At Project Developer's expense, the metered data shall be telemetered (a) to a location designated by Transmission Provider; (b) to a location designated by the Transmission Owner, unless the Transmission Owner agrees otherwise; and (c) to a location designated by Project Developer. Data from the Metering Equipment at the Point of Interconnection shall be used, under normal operating conditions, as the official measurement of the amount of energy delivered from or to the Generating Facility or Merchant Transmission Facility to the Point of Interconnection, provided that the Transmission Provider's rules applicable to Station Power as set forth at Tariff, Attachment K-Appendix, section 1.7.10(d) shall control with respect to a Generation Project Developer's consumption of Station Power.

8.5 Communications

8.5.1 Project Developer Obligations:

Project Developer shall install and maintain satisfactory operating communications with Transmission Provider's system dispatcher or its other designated representative and with the Transmission Owner. Project Developer shall provide standard voice line, dedicated voice line, and electronic communications at its Generating Facility or Merchant Transmission Facility control room. Project Developer also shall provide and maintain backup communication links with both Transmission Provider and Transmission Owner for use during abnormal conditions as specified by Transmission Provider and Transmission Owner, respectively. Project Developer further shall provide the dedicated data circuit(s) necessary to provide Project Developer data to the Transmission Provider and Transmission Owner as necessary to conform with Applicable Technical Requirements and Standards.

8.5.2 Remote Terminal Unit:

Unless otherwise deemed unnecessary by Transmission Provider and Transmission Owner, as indicated in the Generation Interconnection Agreement, prior to any operation of the Generating Facility or Merchant Transmission Facility, a remote terminal unit, or equivalent data collection and transfer equipment acceptable to the Interconnection Parties, shall be installed by Project Developer, or by the Transmission Owner at Project Developer's expense, to gather accumulated and instantaneous data to be telemetered to the location(s) designated by Transmission Provider and Transmission Owner through use of a dedicated point-to-point data circuit(s) as indicated in section 8.5.1 of this Appendix 2. Instantaneous, bi-directional real power and, with respect to a Generation Project Developer's Generating Facility or Merchant Transmission Facility, reactive

power flow information, must be telemetered directly to the location(s) specified by Transmission Provider and the Transmission Owner.

8.5.3 Phasor Measurement Units (PMUs):

A Project Developer entering the New Services Queue on or after October 1, 2012, with a proposed new Generating Facility that has a Maximum Facility Output equal to or greater than 100 MW shall install and maintain, at its expense, phasor measurement units ("PMUs"). PMUs shall be installed on the Generating Facility low side of the generator step-up transformer, unless it is a non-synchronous generation facility, in which case the PMUs shall be installed on the Generating Facility side of the Point of Change of Ownership. The PMUs must be capable of performing phasor measurements at a minimum of 30 samples per second which are synchronized via a high-accuracy satellite clock. To the extent Project Developer installs similar quality equipment, such as relays or digital fault recorders, that can collect data at least at the same rate as PMUs and which data is synchronized via a high-accuracy satellite clock, such equipment would satisfy this requirement. As provided for in the PJM Manuals, a Project Developer shall be required to install and maintain, at its expense, PMU equipment which includes the communication circuit capable of carrying the PMU data to a local data concentrator, and then transporting the information continuously to the Transmission Provider; as well as store the PMU data locally for 30 days. Project Developer shall provide to Transmission Provider all necessary and requested information through the Transmission Provider synchrophasor system, including the following: (a) gross MW and MVAR measured at the Generating Facility side of the generator step-up transformer (or, for a non-synchronous generation facility, to be measured at the Generating Facility side of the Point of Interconnection); (b) generator terminal voltage; (c) generator terminal frequency; and (d) generator field voltage and current, where available. The Transmission Provider will install and provide for the ongoing support and maintenance of the network communications linking the data concentrator to the Transmission Provider. Additional details regarding the requirements and guidelines of PMU data and telecommunication of such data are contained in the PJM Manuals.

9 Force Majeure

9.1 Notice:

An Interconnection Party that is unable to carry out an obligation imposed on it by this Appendix 2 due to Force Majeure shall notify the other parties in writing or by telephone within a reasonable time after the occurrence of the cause relied on.

9.2 Duration of Force Majeure:

A party shall not be considered to be in Default with respect to any obligation hereunder, other than the obligation to pay money when due, if prevented from fulfilling such obligation by Force Majeure. A party unable to fulfill any obligation hereunder (other than an obligation to pay money when due) by reason of Force Majeure shall give notice and the full particulars of such Force Majeure to the other parties in writing as soon as reasonably possible after the occurrence of the cause relied upon. Those notices shall specifically state full particulars of the Force Majeure, the time and date when the Force Majeure occurred, and when the Force Majeure is reasonably expected to cease. Written notices given pursuant to this Article shall be acknowledged in writing as soon as reasonably possible. The party affected shall exercise Reasonable Efforts to remove such disability with reasonable dispatch, but shall not be required to accede or agree to any provision not satisfactory to it in order to settle and terminate a strike or other labor disturbance. The party affected has a continuing notice obligation to the other parties, and must update the particulars of the original Force Majeure notice and subsequent notices, in writing, as the particulars change. The affected party shall be excused from whatever performance is affected only for the duration of the Force Majeure and while the party exercises Reasonable Efforts to alleviate such situation. As soon as the non-performing party is able to resume performance of its obligations excused because of the occurrence of Force Majeure, such party shall resume performance and give prompt written notice thereof to the other parties.

9.3 Obligation to Make Payments:

Any Interconnection Party's obligation to make payments for services shall not be suspended by Force Majeure.

9.4 Definition of Force Majeure:

For the purposes of this section, shall mean any act of God, labor disturbance, act of the public enemy, war, insurrection, riot, fire, storm or flood, explosion, breakage or accident to machinery or equipment, any order, regulation, or restriction imposed by governmental, military, or lawfully established civilian authorities, or any other cause beyond a party’s control that, in any of the foregoing cases, by exercise of due diligence, such party could not reasonably have been expected to avoid, and which, by the exercise of due diligence, it has been unable to overcome. Force majeure does not include (i) a failure of performance that is due to an affected party’s own negligence or intentional wrongdoing; (ii) any removable or remediable causes (other than settlement of a strike or labor dispute) which an affected party fails to remove or remedy within a reasonable time; or (iii) economic hardship of an affected party.

10 Charges

10.1 Specified Charges:

If and to the extent required by the Transmission Owner, after the Initial Operation of the Generating Facility or Merchant Transmission Facility, Project Developer shall pay one or more of the types of recurring charges described in this section to compensate the Transmission Owner for costs incurred in performing certain of its obligations under this Appendix 2. All such charges shall be stated in Schedule E of the Generator Interconnection Agreement. Permissible charges under this section may include:

(a) Administration Charge – Any such charge may recover only the costs and expenses incurred by the Transmission Owner in connection with administrative obligations such as the preparation of bills, the processing of Generating Facility- or Merchant Transmission Facility-specific data on energy delivered at the Point of Interconnection and costs incurred in similar types of administrative processes related to Project Developer's Interconnection Service. An Administration Charge shall not be permitted to the extent that the Transmission Owner's other charges to the Project Developer under the same Generator Interconnection Agreement include an allocation of Transmission Owner's administrative and general expenses and/or other corporate overhead costs.

(b) Metering Charge – Any such charge may recover only the Transmission Owner's costs and expenses associated with operation, maintenance, inspection, testing, and carrying or capital replacement charges for any Metering Equipment that is owned by the Transmission Owner.

(c) Telemetering Charge – Any such charge may recover only the Transmission Owner's costs and expenses associated with operation, maintenance, inspection, testing, and carrying or capital replacement charges for any telemetering equipment that is owned by the Transmission Owner and that is used exclusively in conjunction with Interconnection Service for the Project Developer.

(d) Generating Facility or Merchant Transmission Facility Operations and Maintenance Charge – Any such charge may recover only the Transmission Owner's costs and expenses associated with operation, maintenance, inspection, testing, modifications, taxes, and carrying or capital replacement charges for Transmission Owner Interconnection Facilities and Transmission Owner Upgrades related to the Project Developer's Interconnection Service and that are owned by the Transmission Owner, provided that

(i) any such charge shall exclude costs and expenses associated with Transmission Owner Interconnection Facilities and Transmission Owner Upgrades owned by the Transmission Owner that are radial line facilities that serve load in addition to an Project Developer; and

(ii) except as otherwise provided by Applicable Laws and Regulations, any such charge may include only an allocated share, derived in accordance with the allocations

contained in the System Impact Study(ies), of costs and expenses associated with Transmission Owner Interconnection Facilities and Transmission Owner Upgrades owned by the Transmission Owner that are radial line facilities that serve more than one Project Developer. At the discretion of the affected Interconnected Entities, a Generating Facility or Merchant Transmission Facility Operations and Maintenance Charge authorized under this section may apply on a per-incident basis or on a monthly or other periodic basis.

(e) Other Charges – Any other charges applicable to the Project Developer, as mutually agreed upon by the Project Developer and the Transmission Owner.

10.2 FERC Filings:

To the extent required by law or regulation, each Interconnection Party shall seek FERC acceptance or approval of its respective charges or the methodology for the calculation of such charges. If such filing is required, Transmission Owner shall provide Transmission Provider and Project Developer with appropriate cost data, schedules and/or written testimony in support of any charges under this section in such manner and at such time as to allow Transmission Provider to include such materials in its filing of the Generation Interconnection Agreement with the FERC.

11 Security, Billing and Payments

11.1 Recurring Charges Pursuant to section 10:

The following provisions shall apply with respect to recurring charges applicable to Interconnection Service after Initial Operation of the Generating Facility or Merchant Transmission Facility pursuant to section 10 of this Appendix 2.

11.1.1 General:

Except as, and to the extent, otherwise provided in the Generation Interconnection Agreement, billing and payment of any recurring charges applicable to Interconnection Service after Initial Operation of the Generating Facility or Merchant Transmission Facility pursuant to section 10 of this Appendix 2 shall be in accordance with section 7 of the Tariff. The Transmission Owner shall provide Transmission Provider with all necessary information and supporting data that Transmission Provider may reasonably require to administer billing for and payment of applicable charges under this Appendix 2. Transmission Provider shall remit to the Transmission Owner revenues received in payment of Transmission Owner's charges to Project Developer under this Appendix 2 upon Transmission Provider's receipt of such revenues. At Transmission Provider's reasonable discretion, charges to Project Developer and remittances to Transmission Owner under this Appendix 2 may be netted against other amounts owed by or to such parties under the Tariff.

11.1.2 Billing Disputes:

In the event of a billing dispute between Transmission Provider and Project Developer, Transmission Provider shall continue to provide interconnection service under this Appendix 2 as long as Project Developer (i) continues to make all payments not in dispute, and (ii) pays to Transmission Provider or into an independent escrow account the portion of the invoice in dispute, pending resolution of such dispute. If Project Developer fails to meet these two requirements for continuation of service, then Transmission Provider shall so inform the Interconnection Parties and may provide notice to Project Developer of a Breach pursuant to section 15 of this Appendix 2. Within 30 days after the resolution of the dispute, the Interconnection Party that owes money to the other Interconnection Party shall pay the amount due with interest calculated in accord with section 11.4.

11.2 Costs for Transmission Owner Interconnection Facilities and Transmission Owner Upgrades:

The following provisions shall apply with respect to charges for the Costs of the Transmission Owner for which the Project Developer is responsible.

11.2.1 Adjustments to Security:

The Security provided by Project Developer at or before execution of the Generation Interconnection Agreement (a) shall be reduced as portions of the work are completed, and/or (b) shall be increased or decreased as required to reflect adjustments to Project Developer's cost

responsibility, as determined in accordance with the GIP, to correspond with changes in the Scope of Work developed in accordance with Transmission Provider's scope change process for interconnection projects set forth in the PJM Manuals.

11.2.2 Invoice:

The Transmission Owner shall provide Transmission Provider a quarterly statement of the Transmission Owner's scheduled expenditures during the next three months for, as applicable (a) the design, engineering and construction of, and/or for other charges related to, construction of the Interconnection Facilities and Transmission Owner Upgrades for which the Transmission Owner is responsible under the GIA, or (b) in the event that the Project Developer exercises the Option to Build, for the Transmission Owner's oversight costs (i.e. costs incurred by the Transmission Owner when engaging in oversight activities to satisfy itself that the Project Developer is complying with the Transmission Owner's standards and Specifications for the construction of facilities) associated with Project Developer's building Transmission Owner Interconnection Facilities and Stand Alone Network Upgrades, including but not limited to Costs for tie-in work and Cancellation Costs. Transmission Owner oversight costs shall be consistent with Schedule L of this GIA. Transmission Provider shall bill Project Developer on behalf of the Transmission Owner, for the Transmission Owner's expected Costs during the subsequent three months. Project Developer shall pay each bill within 20 days after receipt thereof. Upon receipt of each of Project Developer's payments of such bills, Transmission Provider shall reimburse the Transmission Owner. Project Developer may request that the Transmission Provider provide a quarterly cost reconciliation. Such a quarterly cost reconciliation will have a one-quarter lag, e.g., reconciliation of Costs for the first calendar quarter of work will be provided at the start of the third calendar quarter of work, provided, however, that section 11.2.3 of this Appendix 2 shall govern the timing of the final cost reconciliation upon completion of the work.

11.2.3 Final Invoice:

Within 120 days after the Transmission Owner completes construction and installation of the Interconnection Facilities and Transmission Owner Upgrades for which the Transmission Owner is responsible under the Generation Interconnection Agreement, Transmission Provider shall provide Project Developer with an accounting of, and the appropriate Interconnection Party, and where applicable, the Construction Party shall make any payment to the other that is necessary to resolve, any difference between (a) Project Developer's responsibility under the Tariff for the actual Cost of such facilities, and (b) Project Developer's previous aggregate payments to Transmission Provider for the Costs of such facilities. Notwithstanding the foregoing, however, Transmission Provider shall not be obligated to make any payment to either the Project Developer or the Transmission Owner that the preceding sentence requires it to make unless and until the Transmission Provider has received the payment that it is required to refund from the Interconnection Party, and where applicable, the Construction Party owing the payment.

11.2.4 Disputes:

In the event of a billing dispute between any of the Interconnection Parties, and where applicable, the Construction Parties, Transmission Provider and the Transmission Owner shall continue to

perform their respective obligations pursuant to this Generation Interconnection Agreement and any related Interconnection Construction Service Agreements so long as (a) Project Developer continues to make all payments not in dispute, and (b) the Security held by the Transmission Provider while the dispute is pending exceeds the amount in dispute, or (c) Project Developer pays to Transmission Provider or into an independent escrow account the portion of the invoice in dispute, pending resolution of such dispute. If Project Developer fails to meet any of these requirements, then Transmission Provider shall so inform the other Interconnection Parties and Construction Parties and Transmission Provider or the Transmission Owner may provide notice to Project Developer of a Breach pursuant to section 15 of this Appendix 2.

11.3 No Waiver:

Payment of an invoice shall not relieve Project Developer from any other responsibilities or obligations it has under this Appendix 2, nor shall such payment constitute a waiver of any claims arising hereunder.

11.4 Interest:

Interest on any unpaid, delinquent amounts shall be calculated in accordance with the methodology specified for interest on refunds in the FERC's regulations at 18 C.F.R. § 35.19a(a)(2)(iii) and shall apply from the due date of the bill to the date of payment.

12 Assignment

12.1 Assignment with Prior Consent:

Except as provided in section 12.2 to this Appendix 2, no Interconnection Party shall assign its rights or delegate its duties, or any part of such rights or duties, under the Generation Interconnection Agreement without the written consent of the other Interconnection Parties, which consent shall not be unreasonably withheld, conditioned, or delayed. Any such assignment or delegation made without such written consent shall be null and void. An Interconnection Party may make an assignment in connection with the sale, merger, or transfer of a substantial portion or all of its properties including the Interconnection Facilities and Transmission Owner Upgrades which it owns or will own upon completion of construction and the transfer of title required as set forth in section 23 of this Appendix 2, so long as the assignee in such a sale, merger, or transfer assumes in writing all rights, duties and obligations arising under this Generation Interconnection Agreement. In addition, the Transmission Owner shall be entitled, subject to Applicable Laws and Regulations, to assign the Generation Interconnection Agreement to any Affiliate or successor that owns and operates all or a substantial portion of the Transmission Owner's transmission facilities.

12.2 Assignment Without Prior Consent

12.2.1 Assignment to Owners:

Project Developer may assign the Generation Interconnection Agreement without the Transmission Owner's or Transmission Provider's prior consent to any Affiliate or person that purchases or otherwise acquires, directly or indirectly, all or substantially all of the Generating Facility or Merchant Transmission Facility and the Project Developer Interconnection Facilities, provided that prior to the effective date of any such assignment, the assignee shall demonstrate that, as of the effective date of the assignment, the assignee has the technical and operational competence to comply with the requirements of this Generation Interconnection Agreement and assumes in a writing provided to the Transmission Owner and Transmission Provider all rights, duties, and obligations of Project Developer arising under this Generation Interconnection Agreement. However, any assignment described herein shall not relieve or discharge the Project Developer from any of its obligations hereunder absent the written consent of the Transmission Provider, such consent not to be unreasonably withheld, conditioned or delayed. Project Developer shall provide Transmission Provider with notice of any such assignment in accordance with the PJM Manuals.

12.2.2 Assignment to Lenders:

Project Developer may, without the consent of the Transmission Provider or the Transmission Owner, assign the Generation Interconnection Agreement to any Project Finance Entity(ies), provided that such assignment does not alter or diminish Project Developer's duties and obligations under this Generation Interconnection Agreement. If Project Developer provides the Transmission Owner with notice of an assignment to any Project Finance Entity(ies) and identifies such Project Finance Entities as contacts for notice purposes pursuant to section 21 of this Appendix 2, the Transmission Provider or Transmission Owner shall provide notice and

reasonable opportunity for such entity(ies) to cure any Breach under this Generation Interconnection Agreement in accordance with this Generation Interconnection Agreement. Transmission Provider or Transmission Owner shall, if requested by such lenders, provide such customary and reasonable documents, including consents to assignment, as may be reasonably requested with respect to the assignment and status of the Generation Interconnection Agreement, provided that such documents do not alter or diminish the rights of the Transmission Provider or Transmission Owner under this Generation Interconnection Agreement, except with respect to providing notice of Breach to a Project Finance Entity. Upon presentation of the Transmission Provider and/or the Transmission Owner's invoice therefor, Project Developer shall pay the Transmission Provider and/or the Transmission Owner's reasonable documented cost of providing such documents and certificates. Any assignment described herein shall not relieve or discharge the Project Developer from any of its obligations hereunder absent the written consent of the Transmission Owner and Transmission Provider.

12.3 Successors and Assigns:

This Generation Interconnection Agreement and all of its provisions are binding upon, and inure to the benefit of, the Interconnection Parties and their respective successors and permitted assigns.

13 Insurance

13.1 Required Coverages For Generation Resources Of More Than 20 Megawatts or Merchant Transmission Facilities:

Each Interconnected Entity and, as applicable, Constructing Entity shall maintain insurance at its own expense as described in paragraphs (a) through (d) below. In addition, if there any construction activities associated with this GIA, each Interconnected Entity and, as applicable, Constructing Entity shall maintain insurance at its own expense as described in paragraph (e). All insurance shall be procured from insurance companies rated "A-", VII, or better by AM Best and authorized to do business in a state or states in which the Interconnection Facilities and Transmission Owner Upgrades are or will be located. Failure to maintain required insurance shall be a Breach of the Generation Interconnection Agreement.

(a) Workers Compensation insurance with statutory limits, as required by the state and/or jurisdiction in which the work is to be performed, and employer's liability insurance with limits of not less than one million dollars ($1,000,000).

(b) Commercial General Liability Insurance and/or Excess Liability Insurance covering liability arising out of premises, operations, personal injury, advertising, products and completed operations coverage, independent contractors coverage, liability assumed under an insured contract, coverage for pollution to the extent normally available, and punitive damages to the extent allowable under applicable law, with limits of not less than one million dollars ($1,000,000) per occurrence/one million dollars ($1,000,000) general aggregate/one million dollars ($1,000,000) products and completed operations aggregate.

(c) Business/Commercial Automobile Liability Insurance for coverage of owned and non-owned and hired vehicles, trailers or semi-trailers designed for travel on public roads, with a minimum, combined single limit of not less than one million dollars ($1,000,000) each accident for bodily injury, including death, and property damage.

(d) Excess and/or Umbrella Liability Insurance with a limit of liability of not less than twenty million dollars ($20,000,000) per occurrence. These limits apply in excess of the employer's liability, commercial general liability and business/commercial automobile liability coverages described above. This requirement can be met alone or via a combination of primary, excess and/or umbrella insurance.

(e) In addition, if there are construction activities required in connection with this GIA, the following Professional Liability Insurance requirements shall apply:

Professional Liability, including Contractors Legal Liability, providing errors, omissions and/or malpractice coverage. Coverage shall be provided for the Interconnected Entity or Constructing Entity's duties, responsibilities and performance outlined in Schedule L to this GIA, with limits of liability as follows:

$10,000,000 each occurrence

$10,000,000 aggregate

An Interconnected Entity may meet the Professional Liability Insurance requirements by requiring third-party contractors, designers, or engineers, or other parties that are responsible for design work associated with the transmission facilities or Interconnection Facilities and Transmission Owner Upgrades necessary for the interconnection to procure professional liability insurance in the amounts and upon the terms prescribed by this section 13.1(e), and providing evidence of such insurance to the other Interconnected Entity. Such insurance shall be procured from companies rated "A-", VII, or better by AM Best and authorized to do business in a state or states in which the Interconnection Facilities and Transmission Owner Upgrades are located. Nothing in this section relieves the Interconnected Entity from complying with the insurance requirements. In the event that the policies of the designers, engineers, or other parties used to satisfy the Interconnected Entity's insurance obligations under this section become invalid for any reason, including but not limited to, (i) the policy(ies) lapsing or otherwise terminating or expiring; (ii) the coverage limits of such policy(ies) are decreased; or (iii) the policy(ies) do not comply with the terms and conditions of the Tariff; Interconnected Entity shall be required to procure insurance sufficient to meet the requirements of this section, such that there is no lapse in insurance coverage.

13.1A Required Coverages for Generation Resources of 20 Megawatts or Less:

Each Interconnected Entity and, as applicable, Constructing Entity shall maintain the types of insurance as described in section 13.1 paragraphs (a) through (e) in an amount sufficient to insure against all reasonably foreseeable direct liabilities given the size and nature of the generating equipment being interconnected, the interconnection itself, and the characteristics of the system to which the interconnection is made. Additional insurance may be required by the Project Developer, as a function of owning and operating a Generating Facility. All insurance shall be procured from insurance companies rated "A-", VII, or better by AM Best and authorized to do business in a state or states in which the Interconnection Facilities and Transmission Owner Upgrades are located. Failure to maintain required insurance shall be a Breach of the Generation Interconnection Agreement.

13.2 Additional Insureds:

The Commercial General Liability, Business/Commercial Automobile Liability and Excess and/or Umbrella Liability policies procured by each Interconnected Entity (the "Insuring Interconnected Entity") shall include each other Interconnection Party (the "Insured Interconnection Party"), and its respective officers, agents and employees as additional insureds, and as applicable each other Construction Party ("Insured Construction Party") its officers, agents and employees as additional insureds, providing all standard coverages and covering liability of the Insured Interconnection Party, and as applicable Insured Construction Party arising out of bodily injury and/or property damage (including loss of use) in any way connected with the operations, performance, or lack of performance under this Generation Interconnection Agreement.

13.3 Other Required Terms:

The above-mentioned insurance policies (except workers' compensation) shall provide the following:

(a) Each policy shall contain provisions that specify that it is primary and non-contributory for any liability arising out of that party's negligence, and shall apply to such extent without consideration for other policies separately carried and shall state that each insured is provided coverage as though a separate policy had been issued to each, except the insurer's liability shall not be increased beyond the amount for which the insurer would have been liable had only one insured been covered. Each Insuring Interconnected Entity shall be responsible for its respective deductibles or retentions.

(b) If any coverage is written on a Claims First Made Basis, continuous coverage shall be maintained or an extended discovery period will be exercised for a period of not less than two years after termination of the Generation Interconnection Agreement.

(c) Provide for a waiver of all rights of subrogation which the Insuring Interconnected Entity's insurance carrier might exercise against the Insured Interconnection Party.

13.3A No Limitation of Liability:

The requirements contained herein as to the types and limits of all insurance to be maintained by the Interconnected Entities are not intended to and shall not in any manner, limit or qualify the liabilities and obligations assumed by the Interconnection Parties under the Generation Interconnection Agreement.

13.4 Self-Insurance:

Notwithstanding the foregoing, each Interconnected Entity may self-insure to meet the minimum insurance requirements of this section 13 of this Appendix 2 to the extent it maintains a self-insurance program, provided that such Interconnected Entity's senior secured debt is rated at investment grade or better by Standard & Poor's and its self-insurance program meets the minimum insurance requirements of this section 13. For any period of time that an Interconnected Entity's senior secured debt is unrated by Standard & Poor's or is rated at less than investment grade by Standard & Poor's, such Party shall comply with the insurance requirements applicable to it under this section 13. In the event that an Interconnected Entity is permitted to self-insure pursuant to this section, it shall notify the other Interconnection Parties that it meets the requirements to self-insure and that its self-insurance program meets the minimum insurance requirements in a manner consistent with that specified in section 13.5 of this Appendix 2.

13.5 Notices; Certificates of Insurance:

All policies of insurance shall provide for 30 days prior written notice of cancellation or material adverse change. If the policies of insurance do not or cannot be endorsed to provide 30 days prior notice of cancellation or material adverse change, each Interconnected Entity shall provide the other Interconnected Entities with 30 days prior written notice of cancellation or material adverse change to any of the insurance required in this agreement. Each Interconnected Entity shall

provide the other with certificates of insurance prior to Initial Operation of the Generating Facility or Merchant Transmission Facility and thereafter at such time intervals as they shall mutually agree upon, provided that such interval shall not be less than one year. All certificates of insurance shall indicate that the certificate holder is included as an additional insured under the Commercial General Liability, Business/Commercial Automobile Liability and Excess and/or Umbrella Liability coverages, and that this insurance is primary with a waiver of subrogation included in favor of the other Interconnected Entities.

In the event the construction activities pursuant to Schedule L are required, the following provisions will apply, in addition to the provisions set forth above: Prior to the commencement of work pursuant to Schedule L, the Constructing Entities agree to furnish each other with certificates of insurance evidencing the insurance coverage obtained in accordance with section 13.1 of this Appendix 2.

13.6 Subcontractor Insurance:

In accord with Good Utility Practice, each Interconnected Entity shall require each of its subcontractors to maintain and provide evidence of insurance coverage of types, and in amounts, commensurate with the risks associated with the services provided by the subcontractor. Bonding of contractors or subcontractors shall be at the hiring Interconnected Entity's discretion, but regardless of bonding, the hiring principal shall be responsible for the performance or non-performance of any contractor or subcontractor it hires.

13.7 Reporting Incidents:

The Interconnection Parties shall report to each other in writing as soon as practical all accidents or occurrences resulting in injuries to any person, including death, and any property damage arising out of the Generation Interconnection Agreement.

14 Indemnity

14.1 Indemnity:

Each Interconnection Party shall indemnify and hold harmless the other Interconnection Parties, and the other Interconnection Parties' officers, shareholders, stakeholders, members, managers, representatives, directors, agents and employees, and Affiliates, from and against any and all loss, liability, damage, cost or expense to third parties, including damage and liability for bodily injury to or death of persons, or damage to property or persons (including reasonable attorneys' fees and expenses, litigation costs, consultant fees, investigation fees, sums paid in settlements of claims, penalties or fines imposed under Applicable Laws and Regulations, and any such fees and expenses incurred in enforcing this indemnity or collecting any sums due hereunder) (collectively, "Loss") to the extent arising out of, in connection with, or resulting from (i) the indemnifying Interconnection Party's breach of any of the representations or warranties made in, or failure of the indemnifying Interconnection Party or any of its subcontractors to perform any of its obligations under, this Generation Interconnection Agreement (including Appendix 2), or (ii) the negligence or willful misconduct of the indemnifying Interconnection Party or its contractors; provided, however, that no Interconnection Party shall have any indemnification obligations under this section 14.1 in respect of any Loss to the extent the Loss results from the negligence or willful misconduct of the Interconnection Party seeking indemnity.

14.2 Indemnity Procedures:

Promptly after receipt by a Person entitled to indemnity ("Indemnified Person") of any claim or notice of the commencement of any action or administrative or legal proceeding or investigation as to which the indemnity provided for in section 14.1 may apply, the Indemnified Person shall notify the indemnifying Interconnection Party of such fact. Any failure of or delay in such notification shall not affect an Interconnection Party's indemnification obligation unless such failure or delay is materially prejudicial to the indemnifying Interconnection Party. The Indemnified Person shall cooperate with the indemnifying Interconnection Party with respect to the matter for which indemnification is claimed. The indemnifying Interconnection Party shall have the right to assume the defense thereof with counsel designated by such indemnifying Interconnection Party and reasonably satisfactory to the Indemnified Person. If the defendants in any such action include one or more Indemnified Persons and the indemnifying Interconnection Party and if the Indemnified Person reasonably concludes that there may be legal defenses available to it and/or other Indemnified Persons which are different from or additional to those available to the indemnifying Interconnection Party, the Indemnified Person shall have the right to select separate counsel to assert such legal defenses and to otherwise participate in the defense of such action on its own behalf. In such instances, the indemnifying Interconnection Party shall only be required to pay the fees and expenses of one additional attorney to represent an Indemnified Person or Indemnified Persons having such differing or additional legal defenses. The Indemnified Person shall be entitled, at its expense, to participate in any action, suit or proceeding, the defense of which has been assumed by the indemnifying Interconnection Party. Notwithstanding the foregoing, the indemnifying Interconnection Party (i) shall not be entitled to assume and control the defense of any such action, suit or proceedings if and to the extent that, in the opinion of the Indemnified Person and its counsel, such action, suit or proceeding involves the potential

imposition of criminal liability on the Indemnified Person, or there exists a conflict or adversity of interest between the Indemnified Person and the indemnifying Interconnection Party, in such event the indemnifying Interconnection Party shall pay the reasonable expenses of the Indemnified Person, and (ii) shall not settle or consent to the entry of any judgment in any action, suit or proceeding without the consent of the Indemnified Person, which shall not be unreasonably withheld, conditioned or delayed.

14.3 Indemnified Person:

If an Indemnified Person is entitled to indemnification under this section 14 as a result of a claim by a third party, and the indemnifying Interconnection Party fails, after notice and reasonable opportunity to proceed under section 14.2 of this Appendix 2, to assume the defense of such claim, such Indemnified Person may at the expense of the indemnifying Interconnection Party contest, settle or consent to the entry of any judgment with respect to, or pay in full, such claim.

14.4 Amount Owing:

If an indemnifying Interconnection Party is obligated to indemnify and hold any Indemnified Person harmless under this section 14, the amount owing to the Indemnified Person shall be the amount of such Indemnified Person's actual Loss, net of any insurance or other recovery.

14.5 Limitation on Damages:

Except as otherwise provided in this section 14, the liability of an Interconnection Party under this Appendix 2 shall be limited to direct actual damages, and all other damages at law are waived. Under no circumstances shall any Interconnection Party or its Affiliates, directors, officers, employees and agents, or any of them, be liable to another Interconnection Party, whether in tort, contract or other basis in law or equity for any special, indirect punitive, exemplary or consequential damages, including lost profits. The limitations on damages specified in this section 14.5 are without regard to the cause or causes related thereto, including the negligence of any Interconnection Party, whether such negligence be sole, joint or concurrent, or active or passive. This limitation on damages shall not affect any Interconnection Party's rights to obtain equitable relief as otherwise provided in this Appendix 2. The provisions of this section 14.5 shall survive the termination or expiration of the Generation Interconnection Agreement.

14.6 Limitation of Liability in Event of Breach:

An Interconnection Party ("Breaching Party") shall have no liability hereunder to the other Interconnection Parties, and the other Interconnection Parties hereby release the Breaching Party, for all claims or damages that either of them incurs that are associated with any interruption in the availability of the Generating Facility or Merchant Transmission Facility, Interconnection Facilities and Transmission Owner Upgrades, Transmission System or Interconnection Service or damages to an Interconnection Party's facilities, except to the extent such interruption or damage is caused by the Breaching Party's gross negligence or willful misconduct in the performance of its obligations under this Generation Interconnection Agreement (including Appendix 2).

14.7 Limited Liability in Emergency Conditions:

Except as otherwise provided in the Tariff or the Operating Agreement, no Interconnection Party shall be liable to any other Interconnection Party for any action that it takes in responding to an Emergency Condition, so long as such action is made in good faith, is consistent with Good Utility Practice and is not contrary to the directives of the Transmission Provider or of the Transmission Owner with respect to such Emergency Condition. Notwithstanding the above, Project Developer shall be liable in the event that it fails to comply with any instructions of Transmission Provider or the Transmission Owner related to an Emergency Condition.

15 Breach, Cure and Default

15.1 Breach:

A Breach of this Generation Interconnection Agreement shall include:

(a) The failure to pay any amount when due;

(b) The failure to comply with any material term or condition of this Appendix 2 or of the other portions of the Generation Interconnection Agreement or any attachments or Schedule hereto, including but not limited to any material breach of a representation, warranty or covenant (other than in subsections (a) and (c)-(e) of this section) made in this Appendix 2 or any provisions of Schedule L;

(c) Assignment of the Generation Interconnection Agreement in a manner inconsistent with its terms;

(d) Failure of an Interconnection Party to provide access rights, or an Interconnection Party's attempt to revoke or terminate access rights, that are provided under this Appendix 2; or

(e) Failure of an Interconnection Party to provide information or data required to be determined under this Appendix 2 to another Interconnection Party for such other Interconnection Party to satisfy its obligations under this Appendix 2.

15.2 Continued Operation:

In the event of a Breach or Default by either Interconnected Entity, and subject to termination of the Generation Interconnection Agreement under section 16 of this Appendix 2, the Interconnected Entities shall continue to operate and maintain, as applicable, such DC power systems, protection and Metering Equipment, telemetering equipment, SCADA equipment, transformers, Secondary Systems, communications equipment, building facilities, software, documentation, structural components, and other facilities and appurtenances that are reasonably necessary for Transmission Provider and the Transmission Owner to operate and maintain the Transmission System and the Transmission Owner Interconnection Facilities and Transmission Owner Upgrades and for Project Developer to operate and maintain the Generating Facility or Merchant Transmission Facility and the Project Developer Interconnection Facilities, in a safe and reliable manner.

15.3 Notice of Breach:

An Interconnection Party not in Breach shall give written notice of an event of Breach to the Breaching Party, to Transmission Provider and to other persons that the Breaching Party identifies in writing to the other Interconnection Party in advance. Such notice shall set forth, in reasonable detail, the nature of the Breach, and where known and applicable, the steps necessary to cure such Breach. In the event of a Breach by Project Developer, Transmission Provider or the Transmission Owner agree to provide notice of such Breach and in the same manner as its notice to Project Developer, to any Project Finance Entity provided that the Project Developer has provided the

notifying Interconnection Party with notice of an assignment to such Project Finance Entity(ies) and identifies such Project Finance Entity(ies) as contacts for notice purposes pursuant to section 21 of this Appendix 2.

15.4 Cure and Default:

An Interconnection Party that commits a Breach and does not take steps to cure the Breach pursuant to this section 15.4 is automatically in Default of this Appendix 2 and of the Generation Interconnection Agreement, and its project and this Agreement shall be deemed terminated and withdrawn. Transmission Provider shall take all necessary steps to effectuate this termination, including submitted the necessary filings with FERC.

15.4.1 Cure of Breach:

15.4.1.1 Except for the event of Breach set forth in section 15.1(a) above, the Breaching Interconnection Party (a) may cure the Breach within 30 days of the time the Non-Breaching Party sends such notice; or (b) if the Breach cannot be cured within 30 days, may commence in good faith all steps that are reasonable and appropriate to cure the Breach within such 30 day time period and thereafter diligently pursue such action to completion pursuant to a plan to cure, which shall be developed and agreed to in writing by the Interconnection Parties. Such agreement shall not be unreasonably withheld.

15.4.1.2 In an event of Breach set forth in section 15.1(a), the Breaching Interconnection Party shall cure the Breach within five days from the receipt of notice of the Breach. If the Breaching Interconnection Party is the Project Developer, and the Project Developer fails to pay an amount due within five days from the receipt of notice of the Breach, Transmission Provider may use Security to cure such Breach. If Transmission Provider uses Security to cure such Breach, Project Developer shall be in automatic Default and its project and this Agreement shall be deemed terminated and withdrawn.

15.5 Right to Compel Performance:

Notwithstanding the foregoing, upon the occurrence of a Default, a non-Defaulting Interconnection Party shall be entitled to exercise such other rights and remedies as it may have in equity or at law. Subject to section 20.1, no remedy conferred by any provision of this Appendix 2 is intended to be exclusive of any other remedy and each and every remedy shall be cumulative and shall be in addition to every other remedy given hereunder or now or hereafter existing at law or in equity or by statute or otherwise. The election of any one or more remedies shall not constitute a waiver of the right to pursue other available remedies.

16 Termination

16.1 Termination of the Generation Interconnection Agreement:

This Generation Interconnection Agreement and Interconnection Service under this Generation Interconnection Agreement may be terminated by the following means:

16.1.1 By Mutual Consent:

Interconnection Service may be terminated as of the date on which the Interconnection Parties mutually agree to terminate the Generation Interconnection Agreement.

16.1.2 By Project Developer:

Subject to its payment of Cancellation Costs, Project Developer may unilaterally terminate the Generation Interconnection Agreement pursuant to Applicable Laws and Regulations upon providing Transmission Provider and the Transmission Owner 60 days prior written notice thereof.

16.1.3 Upon Default of Project Developer:

Transmission Provider may terminate the Generation Interconnection Agreement upon the Default of Project Developer of its obligations under the Generation Interconnection Agreement by providing Project Developer and the Transmission Owner prior written notice of termination.

16.1.4 Cancellation Cost Responsibility upon Termination:

In the event of cancellation pursuant to Appendix 2, section 16.1 of this GIA, the Project Developer shall be liable to pay to the Transmission Owner or Transmission Provider all Cancellation Costs in connection with the GIA. Cancellation costs may include costs for Network Upgrades assigned to Project Developer, in accordance with the Tariff and as reflected in this GIA, which remain the responsibility of Project Developer under the Tariff. This shall include costs including, but not limited to, the costs for such Network Upgrades to the extent such cancellation would be a Material Modification, or would have an adverse effect or impose costs on other Project Developers in the Cycle. In the event the Transmission Owner incurs Cancellation Costs, it shall provide the Transmission Provider, with a copy to the Project Developer, with a written demand for payment and with reasonable documentation of such Cancellation Costs. The Project Developer shall pay the Transmission Provider each bill for Cancellation Costs within 30 days after, as applicable, the Transmission Owner's or Transmission Provider's presentation to the Project Developer of written demand therefor, provided that such demand includes reasonable documentation of the Cancellation Costs that the invoicing party seeks to collect. Upon receipt of each of Project Developer's payments of such bills of the Transmission Owner, Transmission Provider shall reimburse the Transmission Owner for Cancellation Costs incurred by the latter.

16.2 Disposition of Facilities upon Termination:

16.2.1 Disconnection:

Upon termination of the Generation Interconnection Agreement in accordance with this section 16, Transmission Provider and/or the Transmission Owner shall, in coordination with Project Developer, physically disconnect the Generating Facility or Merchant Transmission Facility from the Transmission System, except to the extent otherwise allowed by this Appendix 2.

16.2.2 Network Facilities:

At the time of termination, the Transmission Provider and the Interconnected Entities shall keep in place any portion of the Interconnection Facilities and Transmission Owner Upgrades that the Transmission Provider deems necessary for the safety, integrity and/or reliability of the Transmission System. Otherwise, Transmission Provider may, in its discretion, within 30 days following termination of Interconnection Service, require the removal of all or any part of the Interconnection Facilities and Transmission Owner Upgrades.

16.2.2.1: In the event that (i) the Generation Interconnection Agreement and Interconnection Service under this Appendix 2 are terminated and (ii) Transmission Provider determines that some or all of the Interconnection Facilities and Transmission Owner Upgrades that are owned by the Project Developer are necessary for the safety, integrity and/or reliability of the Transmission System, Project Developer, subject to Applicable Laws and Regulations, shall transfer to the Transmission Owner title to the Interconnection Facilities and Transmission Owner Upgrades that Transmission Provider has determined to be necessary for the safety, integrity and/or reliability of the Transmission System.

16.2.2.2: In the event that removal of some or all of the Interconnection Facilities and Transmission Owner Upgrades is necessary to maintain compliance with Applicable Standards, Project Developer shall be responsible for the costs of any such removal. Project Developer shall have the right to take or retain title to equipment and/or facilities that are removed pursuant to this section; alternatively, in the event that the Project Developer does not wish to retain title to removed equipment and/or facilities that it owns, the Transmission Owner may elect to pay the Project Developer a mutually agreed amount to acquire and own such equipment and/or facilities.

16.2.3 Request for Disposition Determination:

Project Developer may request a determination from the Transmission Provider whether any Interconnection Facilities and Transmission Owner Upgrades will be removed in the event of any termination of Interconnection Service to the Generating Facility or Merchant Transmission Facility within the following year. Transmission Provider shall respond to that request no later than 60 days after receipt.

16.3 FERC Approval:

Notwithstanding any other provision of this Appendix 2, no termination hereunder shall become effective until the Interconnected Entities and/or Transmission Provider have complied with all Applicable Laws and Regulations applicable to such termination, including the filing with the

FERC of a notice of termination of the Generation Interconnection Agreement, and acceptance of such notice for filing by the FERC.

16.4 Survival of Rights:

Termination of this Generation Interconnection Agreement shall not relieve any Interconnection Party of any of its liabilities and obligations arising under this Generation Interconnection Agreement (including Appendix 2) prior to the date on which termination becomes effective, and each Interconnection Party may take whatever judicial or administrative actions it deems desirable or necessary to enforce its rights hereunder. Applicable provisions of this Appendix 2 will continue in effect after termination to the extent necessary to provide for final billings, billing adjustments, and the determination and enforcement of liability and indemnification obligations arising from events or acts that occurred while the Generation Interconnection Agreement was in effect.

In the event activities under Schedule L are required, the following provisions will apply, in addition to the provisions set forth above:

The obligations of the Construction Parties hereunder with respect to payments, Cancellation Costs, warranties, liability and indemnification shall survive termination to the extent necessary to provide for the determination and enforcement of said obligations arising from acts or events that occurred while GIA was in effect. In addition, applicable provisions of this GIA will continue in effect after expiration, cancellation or termination to the extent necessary to provide for final billings, payments, and billing adjustments.

17 Confidentiality:

Information is Confidential Information only if it is clearly designated or marked in writing as confidential on the face of the document, or, if the information is conveyed orally or by inspection, if the Interconnection Party providing the information orally informs the Interconnection Party receiving the information that the information is confidential. If requested by any Interconnection Party, the disclosing Interconnection Party shall provide in writing the basis for asserting that the information referred to in this section warrants confidential treatment, and the requesting Interconnection Party may disclose such writing to an appropriate Governmental Authority. Any Interconnection Party shall be responsible for the costs associated with affording confidential treatment to its information.

17.1 Term:

During the term of the Generation Interconnection Agreement, and for a period of three years after the expiration or termination of the Generation Interconnection Agreement, except as otherwise provided in this section 17, each Interconnection Party shall hold in confidence, and shall not disclose to any person, Confidential Information provided to it by any other Interconnection Party.

17.2 Scope:

Confidential Information shall not include information that the receiving Interconnection Party can demonstrate: (i) is generally available to the public other than as a result of a disclosure by the receiving Interconnection Party; (ii) was in the lawful possession of the receiving Interconnection Party on a non-confidential basis before receiving it from the disclosing Interconnection Party; (iii) was supplied to the receiving Interconnection Party without restriction by a third party, who, to the knowledge of the receiving Interconnection Party, after due inquiry, was under no obligation to the disclosing Interconnection Party to keep such information confidential; (iv) was independently developed by the receiving Interconnection Party without reference to Confidential Information of the disclosing Interconnection Party; (v) is, or becomes, publicly known, through no wrongful act or omission of the receiving Interconnection Party or breach of this Appendix 2; or (vi) is required, in accordance with section 17.7 of this Appendix 2, to be disclosed to any Governmental Authority or is otherwise required to be disclosed by law or subpoena, or is necessary in any legal proceeding establishing rights and obligations under the Generation Interconnection Agreement. Information designated as Confidential Information shall no longer be deemed confidential if the Interconnection Party that designated the information as confidential notifies the other Interconnection Parties that it no longer is confidential.

17.3 Release of Confidential Information:

No Interconnection Party shall disclose Confidential Information to any other person, except to its Affiliates (limited by FERC's Standards of Conduct requirements), subcontractors, employees, consultants or to parties who may be or considering providing financing to or equity participation in Project Developer or to potential purchasers or assignees of Project Developer, on a need-to-know basis in connection with the Generation Interconnection Agreement, unless such person has first been advised of the confidentiality provisions of this section 17 and has agreed to comply

with such provisions. Notwithstanding the foregoing, an Interconnection Party providing Confidential Information to any person shall remain primarily responsible for any release of Confidential Information in contravention of this section 17.

17.4 Rights:

Each Interconnection Party retains all rights, title, and interest in the Confidential Information that it discloses to any other Interconnection Party. An Interconnection Party's disclosure to another Interconnection Party of Confidential Information shall not be deemed a waiver by any Interconnection Party or any other person or entity of the right to protect the Confidential Information from public disclosure.

17.5 No Warranties:

By providing Confidential Information, no Interconnection Party makes any warranties or representations as to its accuracy or completeness. In addition, by supplying Confidential Information, no Interconnection Party obligates itself to provide any particular information or Confidential Information to any other Interconnection Party nor to enter into any further agreements or proceed with any other relationship or joint venture.

17.6 Standard of Care:

Each Interconnection Party shall use at least the same standard of care to protect Confidential Information it receives as the Interconnection Party uses to protect its own Confidential Information from unauthorized disclosure, publication or dissemination. Each Interconnection Party may use Confidential Information solely to fulfill its obligations to the other Interconnection Parties under the Generation Interconnection Agreement or to comply with Applicable Laws and Regulations.

17.7 Order of Disclosure:

If a Governmental Authority with the right, power, and apparent authority to do so requests or requires an Interconnection Party, by subpoena, oral deposition, interrogatories, requests for production of documents, administrative order, or otherwise, to disclose Confidential Information, that Interconnection Party shall provide the Interconnection Party that provided the information with prompt prior notice of such request(s) or requirement(s) so that the providing Interconnection Party may seek an appropriate protective order or waive compliance with the terms of this Appendix 2 or the Generation Interconnection Agreement. Notwithstanding the absence of a protective order or agreement, or waiver, the Interconnection Party that is subjected to the request or order may disclose such Confidential Information which, in the opinion of its counsel, the Interconnection Party is legally compelled to disclose. Each Interconnection Party shall use Reasonable Efforts to obtain reliable assurance that confidential treatment will be accorded any Confidential Information so furnished.

17.8 Termination of Generation Interconnection Agreement:

Upon termination of the Generation Interconnection Agreement for any reason, each Interconnection Party shall, within 10 calendar days of receipt of a written request from another party, use Reasonable Efforts to destroy, erase, or delete (with such destruction, erasure and deletion certified in writing to the requesting party) or to return to the other party, without retaining copies thereof, any and all written or electronic Confidential Information received from the requesting party.

17.9 Remedies:

The Interconnection Parties agree that monetary damages would be inadequate to compensate an Interconnection Party for another Interconnection Party's Breach of its obligations under this section 17. Each Interconnection Party accordingly agrees that the other Interconnection Parties shall be entitled to equitable relief, by way of injunction or otherwise, if the first Interconnection Party breaches or threatens to breach its obligations under this section 17, which equitable relief shall be granted without bond or proof of damages, and the receiving Interconnection Party shall not plead in defense that there would be an adequate remedy at law. Such remedy shall not be deemed to be an exclusive remedy for the breach of this section 17, but shall be in addition to all other remedies available at law or in equity. The Interconnection Parties further acknowledge and agree that the covenants contained herein are necessary for the protection of legitimate business interests and are reasonable in scope. No Interconnection Party, however, shall be liable for indirect, incidental or consequential or punitive damages of any nature or kind resulting from or arising in connection with this section 17.

17.10 Disclosure to FERC or its Staff:

Notwithstanding anything in this section 17 to the contrary, and pursuant to 18 C.F.R. § 1b.20, if FERC or its staff, during the course of an investigation or otherwise, requests information from one of the Interconnection Parties that is otherwise required to be maintained in confidence pursuant to this Generation Interconnection Agreement, the Interconnection Party, shall provide the requested information to FERC or its staff, within the time provided for in the request for information. In providing the information to FERC or its staff, the Interconnection Party must, consistent with 18 C.F.R. § 388.122, request that the information be treated as confidential and non-public by FERC and its staff and that the information be withheld from public disclosure. Interconnection Parties are prohibited from notifying the other Interconnection Parties prior to the release of the Confidential Information to FERC or its staff. An Interconnection Party shall notify the other Interconnection Parties to the Generation Interconnection Agreement when it is notified by FERC or its staff that a request to release Confidential Information has been received by FERC, at which time any of the Interconnection Parties may respond before such information would be made public, pursuant to 18 C.F.R. § 388.112.

17.11 Non-Disclosure:

Subject to the exception in section 17.10 of this Appendix 2, no Interconnection Party shall disclose Confidential Information of another Interconnection Party to any person not employed or retained by the Interconnection Party, except to the extent disclosure is (i) required by law; (ii) reasonably deemed by the disclosing Interconnection Party to be required in connection with a

dispute between or among the Interconnection Parties, or the defense of litigation or dispute; (iii) otherwise permitted by consent of the Interconnection Party that provided such Confidential Information, such consent not to be unreasonably withheld; or (iv) necessary to fulfill its obligations under this Generation Interconnection Agreement or as a transmission service provider or a Control Area operator including disclosing the Confidential Information to an RTO or ISO or to a regional or national reliability organization. Prior to any disclosures of another Interconnection Party's Confidential Information under this subparagraph, the disclosing Interconnection Party shall promptly notify the other Interconnection Parties in writing and shall assert confidentiality and cooperate with the other Interconnection Parties in seeking to protect the Confidential Information from public disclosure by confidentiality agreement, protective order or other reasonable measures.

17.12 Information in the Public Domain:

This provision shall not apply to any information that was or is hereafter in the public domain (except as a result of a Breach of this provision).

17.13 Return or Destruction of Confidential Information:

If an Interconnection Party provides any Confidential Information to another Interconnection Party in the course of an audit or inspection, the providing Interconnection Party may request the other party to return or destroy such Confidential Information after the termination of the audit period and the resolution of all matters relating to that audit. Each Interconnection Party shall make Reasonable Efforts to comply with any such requests for return or destruction within 10 days of receiving the request and shall certify in writing to the other Interconnection Party that it has complied with such request.

18 Subcontractors

18.1 Use of Subcontractors:

Nothing in this Appendix 2 shall prevent the Interconnection Parties from utilizing the services of subcontractors as they deem appropriate to perform their respective obligations hereunder, provided, however, that each Interconnection Party shall require its subcontractors to comply with all applicable terms and conditions of this Appendix 2 in providing such services.

18.2 Responsibility of Principal:

The creation of any subcontract relationship shall not relieve the hiring Interconnection Party of any of its obligations under this Appendix 2. Each Interconnection Party shall be fully responsible to the other Interconnection Parties for the acts and/or omissions of any subcontractor it hires as if no subcontract had been made.

18.3 Indemnification by Subcontractors:

To the fullest extent permitted by law, an Interconnection Party that uses a subcontractor to carry out any of the Interconnection Party's obligations under this Appendix 2 shall require each of its subcontractors to indemnify, hold harmless and defend each other Interconnection Party, its representatives and assigns from and against any and all claims and/or liability for damage to property, injury to or death of any person, including the employees of any Interconnection Party or of any Affiliate of any Interconnection Party, or any other liability incurred by the other Interconnection Party or any of its Affiliates, including all expenses, legal or otherwise, to the extent caused by any act or omission, negligent or otherwise, by such subcontractor and/or its officers, directors, employees, agents and assigns, that arises out of or is connected with the operation of the facilities of either Interconnected Entity described in this Appendix 2; provided, however, that no Interconnection Party or Affiliate thereof shall be entitled to indemnity under this section 18.3 in respect of any injury, loss, or damage to the extent that such loss, injury, or damage results from the negligence or willful misconduct of the Interconnection Party or Affiliate seeking indemnity.

18.4 Subcontractors Not Beneficiaries:

No subcontractor is intended to be, or shall be deemed to be, a third-party beneficiary of a Generation Interconnection Agreement.

19 Information Access and Audit Rights

19.1 Information Access:

Consistent with Applicable Laws and Regulations, each Interconnection Party shall make available such information and/or documents reasonably requested by another Interconnection Party that are necessary to (i) verify the costs incurred by the other Interconnection Party for which the requesting Interconnection Party is responsible under this Appendix 2; and (ii) carry out obligations and responsibilities under this Appendix 2, provided that the Interconnection Parties shall not use such information for purposes other than those set forth in this section 19.1 and to enforce their rights under this Appendix 2.

19.2 Reporting of Non-Force Majeure Events:

Each Interconnection Party shall notify the other Interconnection Parties when it becomes aware of its inability to comply with the provisions of this Appendix 2 for a reason other than an event of force majeure as defined in section 9.4 of this Appendix 2. The parties agree to cooperate with each other and provide necessary information regarding such inability to comply, including, but not limited to, the date, duration, reason for the inability to comply, and corrective actions taken or planned to be taken with respect to such inability to comply. Notwithstanding the foregoing, notification, cooperation or information provided under this section shall not entitle the receiving Interconnection Party to allege a cause of action for anticipatory breach of the Generation Interconnection Agreement.

19.3 Audit Rights:

Subject to the requirements of confidentiality under section 17 of this Appendix 2, each Interconnection Party shall have the right, during normal business hours, and upon prior reasonable notice to the pertinent other Interconnection Party, to audit at its own expense the other Interconnection Party's accounts and records pertaining to such Interconnection Party's performance and/or satisfaction of obligations arising under this Appendix 2. Any audit authorized by this section shall be performed at the offices where such accounts and records are maintained and shall be limited to those portions of such accounts and records that relate to obligations under this Appendix 2. Any request for audit shall be presented to the Interconnection Party to be audited not later than 24 months after the event as to which the audit is sought. Each Interconnection Party shall preserve all records held by it for the duration of the audit period.

20 Disputes

20.1 Submission:

Any claim or dispute that any Interconnection Party may have against another arising out of the Generation Interconnection Agreement may be submitted for resolution in accordance with the dispute resolution provisions of the Tariff.

20.2 Rights Under the Federal Power Act:

Nothing in this section shall restrict the rights of any Interconnection Party to file a complaint with FERC under relevant provisions of the Federal Power Act.

20.3 Equitable Remedies:

Nothing in this section shall prevent any Interconnection Party from pursuing or seeking any equitable remedy available to it under Applicable Laws and Regulations.

21 Notices

21.1 General:

Any notice, demand or request required or permitted to be given by any Interconnection Party to another and any instrument required or permitted to be tendered or delivered by any Interconnection Party, in writing to another shall be provided electronically or may be so given, tendered or delivered, by recognized national courier, or by depositing the same with the United States Postal Service with postage prepaid, for delivery by certified or registered mail, addressed to the Interconnection Party, or personally delivered to the Interconnection Party, at the electronic or other address specified in the Generation Interconnection Agreement.

21.2 Emergency Notices:

Moreover, notwithstanding the foregoing, any notice hereunder concerning an Emergency Condition or other occurrence requiring prompt attention, or as necessary during day-to-day operations, may be made by telephone or in person, provided that such notice is confirmed in writing promptly thereafter. Notice in an Emergency Condition, or as necessary during day-to-day operations, shall be provided (i) if by the Transmission Owner, to the shift supervisor at, as applicable, a Generation Project Developer's Generating Facility or a Transmission Project Developer's control center; and (ii) if by the Project Developer, to the shift supervisor at the Transmission Owner's transmission control center.

21.3 Operational Contacts:

Each Interconnection Party shall designate, and provide to each other Interconnection Party contact information concerning, a representative to be responsible for addressing and resolving operational issues as they arise during the term of the Generation Interconnection Agreement.

22 Miscellaneous

22.1 Regulatory Filing:

In the event that this Generation Interconnection Agreement contains any terms that deviate materially from the form included in the Tariff, Transmission Provider shall file the Generation Interconnection Agreement on behalf of itself and the Transmission Owner with FERC as a service schedule under the Tariff within 30 days after execution. Project Developer may request that any information so provided be subject to the confidentiality provisions of section 17 of this Appendix 2. An Project Developer shall have the right, with respect to any Generation Interconnection Agreement tendered to it, to request (a) dispute resolution under section 12 of the Tariff or, if concerning the Regional Transmission Expansion Plan, consistent with Schedule 5 of the Operating Agreement, or (b) that Transmission Provider file the agreement unexecuted with FERC. With the filing of any unexecuted Generation Interconnection Agreement, Transmission Provider may, in its discretion, propose to FERC a resolution of any or all of the issues in dispute between or among the Interconnection Parties.

22.2 Waiver:

Any waiver at any time by an Interconnection Party of its rights with respect to a Breach or Default under this Generation Interconnection Agreement or with respect to any other matters arising in connection with this Appendix 2, shall not be deemed a waiver or continuing waiver with respect to any subsequent Breach or Default or other matter.

22.3 Amendments and Rights Under the Federal Power Act:

This Generation Interconnection Agreement may be amended or supplemented only by a written instrument duly executed by all Interconnection Parties. An amendment to the Generation Interconnection Agreement shall become effective and a part of this Generation Interconnection Agreement upon satisfaction of all Applicable Laws and Regulations. Notwithstanding the foregoing, nothing contained in this Generation Interconnection Agreement shall be construed as affecting in any way any of the rights of any Interconnection Party with respect to changes in applicable rates or charges under section 205 of the Federal Power Act and/or FERC's rules and regulations thereunder, or any of the rights of any Interconnection Party under section 206 of the Federal Power Act and/or FERC's rules and regulations thereunder. The terms and conditions of this Generation Interconnection Agreement and every appendix referred to therein shall be amended, as mutually agreed by the Interconnection Parties, to comply with changes or alterations made necessary by a valid applicable order of any Governmental Authority having jurisdiction hereof.

22.4 Binding Effect:

This Generation Interconnection Agreement, including this Appendix 2, and the rights and obligations thereunder shall be binding upon, and shall inure to the benefit of, the successors and assigns of the Interconnection Parties.

22.5 Regulatory Requirements:

Each Interconnection Party's performance of any obligation under this Generation Interconnection Agreement for which such party requires approval or authorization of any Governmental Authority shall be subject to its receipt of such required approval or authorization in the form and substance satisfactory to the receiving Interconnection Party, or the Interconnection Party making any required filings with, or providing notice to, such Governmental Authorities, and the expiration of any time period associated therewith. Each Interconnection Party shall in good faith seek, and shall use Reasonable Efforts to obtain, such required authorizations or approvals as soon as reasonably practicable.

23 Representations and Warranties

23.1 General:

Each Interconnected Entity hereby represents, warrants and covenants as follows with these representations, warranties, and covenants effective as to the Interconnected Entity during the time the Generation Interconnection Agreement is effective:

23.1.1 Good Standing:

Such Interconnected Entity is duly organized or formed, as applicable, validly existing and in good standing under the laws of its State of organization or formation, and is in good standing under the laws of the respective State(s) in which it is incorporated and operates as stated in the Generation Interconnection Agreement.

23.1.2 Authority:

Such Interconnected Entity has the right, power and authority to enter into the Generation Interconnection Agreement, to become a party hereto and to perform its obligations hereunder. The Generation Interconnection Agreement is a legal, valid and binding obligation of such Interconnected Entity, enforceable against such Interconnected Entity in accordance with its terms, except as the enforceability thereof may be limited by applicable bankruptcy, insolvency, reorganization or other similar laws affecting creditors' rights generally and by general equitable principles (regardless of whether enforceability is sought in a proceeding in equity or at law).

23.1.3 No Conflict:

The execution, delivery and performance of the Generation Interconnection Agreement does not violate or conflict with the organizational or formation documents, or bylaws or operating agreement, of the Interconnected Entity, or with any judgment, license, permit, order, material agreement or instrument applicable to or binding upon the Interconnected Entity or any of its assets.

23.1.4 Consent and Approval:

Such Interconnected Entity has sought or obtained, or, in accordance with the Generation Interconnection Agreement will seek or obtain, each consent, approval, authorization, order, or acceptance by any Governmental Authority in connection with the execution, delivery and performance of the Generation Interconnection Agreement and it will provide to any Governmental Authority notice of any actions under this Appendix 2 that are required by Applicable Laws and Regulations.

23.2 Transmission Outages:

23.2.1 Outages; Coordination:

The Construction Parties acknowledge and agree that certain outages of transmission facilities owned by the Transmission Owner, as more specifically detailed in the Scope of Work, may be necessary in order to complete the process of constructing and installing all Interconnection Facilities and Transmission Owner Upgrades. The Construction Parties further acknowledge and agree that any such outages shall be coordinated by and through the Transmission Provider.

23.3 Land Rights; Transfer of Title:

In the event activities under Schedule L of this GIA are required, the following provisions will apply, in addition to the provisions set forth above:

23.3.1 Grant of Easements and Other Land Rights:

Project Developer at its sole cost and expense, shall grant such easements and other land rights to the Transmission Owner over the Site at such times and in such a manner as the Transmission Owner may reasonably require to perform its obligations under the GIA and/or to perform its operation and maintenance obligations under the Generation Interconnection Agreement.

23.3.2 Construction of Facilities on Project Developer Property:

To the extent that the Transmission Owner is required to construct and install any Transmission Owner Interconnection Facilities and Transmission Owner Upgrades on land owned by the Project Developer, the Project Developer, at its sole cost and expense, shall legally transfer to the Transmission Owner all easements and other land rights required pursuant to section 23.1 above prior to the commencement of such construction and installation.

23.3.3 Third Parties:

If any of the easements and other land rights described in section 23.1 above must be obtained from a third party, the Transmission Owner's obligation for completing its construction responsibilities in accordance with the Schedule of Work set forth in Schedule L hereto, to the extent of the facilities that it is responsible for constructing for which such easements and land rights are necessary, shall be subject to Project Developer's acquisition of such easements and other land rights at such times and in such manner as the Transmission Owner may reasonably require to perform its obligations under this Appendix 2, and/or to perform its operation and maintenance obligations under the Generation Interconnection Agreement, provided, however, that upon Project Developer's request, the Transmission Owner shall assist the Project Developer in acquiring such land rights with efforts similar in nature and extent to those that the Transmission Owner typically undertakes in acquiring land rights for construction of facilities on its own behalf. The terms of easements and land rights acquired by Project Developer shall not unreasonably impede the Transmission Owner's timely completion of construction of the affected facilities.

23.3.4 Documentation:

Project Developer shall prepare, execute and file such documentation as the Transmission Owner may reasonably require to memorialize any easements and other land rights granted pursuant to

this section 23.3. Documentation of such easements and other land rights, and any associated filings, shall be in a form acceptable to the Transmission Owner.

23.3.5 Transfer of Title to Certain Facilities Constructed by Project Developer:

Within 30 days after the Project Developer's receipt of notice of acceptance following Stage Two energization of the Interconnection Facilities and Transmission Owner Upgrades, the Project Developer shall deliver to the Transmission Owner, for the Transmission Owner's review and approval, all of the documents and filings necessary to transfer to the Transmission Owner title to any Transmission Owner Interconnection Facilities and Transmission Owner Upgrades constructed by the Project Developer, and to convey to the Transmission Owner any easements and other land rights to be granted by Project Developer in accordance with section 23.3.1 above that have not then already been conveyed. The Transmission Owner shall review and approve such documentation, such approval not to be unreasonably withheld, delayed, or conditioned. Within 30 days after its receipt of the Transmission Owner's written notice of approval of the documentation, the Project Developer, in coordination and consultation with the Transmission Owner, shall make any necessary filings at the FERC or other governmental agencies for regulatory approval of the transfer of title. Within 20 days after the issuance of the last order granting a necessary regulatory approval becomes final (i.e., is no longer subject to rehearing), the Project Developer shall execute all necessary documentation and shall make all necessary filings to record and perfect the Transmission Owner's title in such facilities and in the easements and other land rights to be conveyed to the Transmission Owner. Prior to such transfer to the Transmission Owner of title to the Transmission Owner Interconnection Facilities and Transmission Owner Upgrades built by the Project Developer, the risk of loss or damages to, or in connection with, such facilities shall remain with the Project Developer. Transfer of title to facilities under this section shall not affect the Project Developer's receipt or use of the interconnection rights related to Network Upgrades, Distribution Upgrades, Stand Alone Network Upgrades, or Transmission Owner Interconnection Facilities which it otherwise may be eligible as provided in the GIP.

23.3.6 Liens:

The Project Developer shall take all reasonable steps to ensure that, at the time of transfer of title in the Transmission Owner Interconnection Facilities built by the Project Developer to the Transmission Owner, those facilities shall be free and clear of any and all liens and encumbrances, including mechanics' liens. To the extent that the Project Developer cannot reasonably clear a lien or encumbrance prior to the time for transferring title to the Transmission Owner, Project Developer shall nevertheless convey title subject to the lien or encumbrance and shall indemnify, defend and hold harmless the Transmission Owner against any and all claims, costs, damages, liabilities and expenses (including without limitation reasonable attorneys' fees) which may be brought or imposed against or incurred by Transmission Owner by reason of any such lien or encumbrance or its discharge.

23.4 Warranties:

23.4.1 Project Developer Warranty:

The Project Developer shall warrant that its work (or the work of any subcontractor that it retains) in constructing and installing the Transmission Owner Interconnection Facilities or Stand Alone Network Upgrades that it builds is free from defects in workmanship and design and shall conform to the requirements of this GIA for one year (the "Project Developer Warranty Period") commencing upon the date title is transferred to Transmission Owner in accordance with section 23.3.5 of this Appendix 2. The Project Developer shall, at its sole expense and promptly after notification by the Transmission Owner, correct or replace defective work in accordance with Applicable Technical Requirements and Standards, during the Project Developer Warranty Period. The warranty period for such corrected or replaced work shall be the unused portion of the Project Developer Warranty Period remaining as of the date of notice of the defect. The Project Developer Warranty Period shall resume upon acceptance of such corrected or replaced work. All Costs incurred by Transmission Owner as a result of such defective work shall be reimbursed to the Transmission Owner by the Project Developer on demand; provided that the Transmission Owner submits the demand to the Project Developer within the Project Developer Warranty Period and provides reasonable documentation of the claimed costs. The Transmission Owner's acceptance, inspection and testing, or a third party's inspection or testing, of such facilities pursuant to Schedule L, section 11.9 of this GIA shall not be construed to limit in any way the warranty obligations of the Project Developer, and this provision does not modify and shall not limit the Project Developer's indemnification obligations set forth in Appendix 2, section 14.0 of this GIA.

23.4.2 Manufacturer Warranties:

Prior to the transfer to the Transmission Owner of title to the Transmission Owner Interconnection Facilities built by the Project Developer, the Project Developer shall produce documentation satisfactory to the Transmission Owner evidencing the transfer to the Transmission Owner of all manufacturer warranties for equipment and/or materials purchased by the Project Developer for use and/or installation as part of the Transmission Owner Interconnection Facilities and Stand Alone Network Upgrades built by the Project Developer.

24 Tax Liability

24.1 Safe Harbor Provisions:

This section 24.1 is applicable only to Project Developers. Provided that Project Developer agrees to conform to all requirements of the Internal Revenue Service ("IRS") (e.g., the "safe harbor" section 118(a) and 118(b) of the Internal Revenue Code of 1986, as amended and interpreted by Notice 2016-36, 2016-25 I.R.B. (6/20/2016)) that would confer nontaxable status on some or all of the transfer of property, including money, by Project Developer to the Transmission Owner for payment of the Costs of construction of the Transmission Owner Interconnection Facilities and Transmission Owner Upgrades, the Transmission Owner, based on such agreement and on current law, shall treat such transfer of property to it as nontaxable income and, except as provided in section 24.4.2 below, shall not include income taxes in the Costs of Transmission Owner Interconnection Facilities and Transmission Owner Upgrades that are payable by Project Developer under the Generation Interconnection Agreement. Project Developer shall document its agreement to conform to IRS requirements for such non-taxable status in the Generation Interconnection Agreement, the Interconnection Construction Service Agreement, and/or applicable agreement.

24.2 Tax Indemnity:

Project Developer shall indemnify the Transmission Owner for any costs that Transmission Owner incurs in the event that the IRS and/or a state department of revenue ("State") determines that the property, including money, transferred by Project Developer to the Transmission Owner with respect to the construction of the Transmission Owner Interconnection Facilities and Transmission Owner Upgrades is taxable income to the Transmission Owner. Project Developer shall pay to the Transmission Owner, on demand, the amount of any income taxes that the IRS or a State assesses to the Transmission Owner in connection with such transfer of property and/or money, plus any applicable interest and/or penalty charged to the Transmission Owner. In the event that the Transmission Owner chooses to contest such assessment, either at the request of Project Developer or on its own behalf, and prevails in reducing or eliminating the tax, interest and/or penalty assessed against it, the Transmission Owner shall refund to Project Developer the excess of its demand payment made to the Transmission Owner over the amount of the tax, interest and penalty for which the Transmission Owner is finally determined to be liable. Project Developer's tax indemnification obligation under this section shall survive any termination of the Generation Interconnection Agreement or Interconnection Construction Service Agreement.

24.3 Taxes Other Than Income Taxes:

Upon the timely request by Project Developer, and at Project Developer's sole expense, the Transmission Owner shall appeal, protest, seek abatement of, or otherwise contest any tax (other than federal or state income tax) asserted or assessed against the Transmission Owner for which Project Developer may be required to reimburse Transmission Provider under the terms of this Appendix 2 or the GIP. Project Developer shall pay to the Transmission Owner on a periodic basis, as invoiced by the Transmission Owner, the Transmission Owner's documented reasonable costs of prosecuting such appeal, protest, abatement, or other contest. Project Developer and the

Transmission Owner shall cooperate in good faith with respect to any such contest. Unless the payment of such taxes is a prerequisite to an appeal or abatement or cannot be deferred, no amount shall be payable by Project Developer to the Transmission Owner for such contested taxes until they are assessed by a final, non-appealable order by any court or agency of competent jurisdiction. In the event that a tax payment is withheld and ultimately due and payable after appeal, Project Developer will be responsible for all taxes, interest and penalties, other than penalties attributable to any delay caused by the Transmission Owner.

24.4 Income Tax Gross-Up:

24.4.1 Additional Security:

In the event that Project Developer does not provide the safe harbor documentation required under section 24.1 prior to execution of the Generation Interconnection Agreement, within 15 days after such execution, Transmission Provider shall notify Project Developer in writing of the amount of additional Security that Project Developer must provide. The amount of Security that a Transmission Project Developer must provide initially pursuant to this Generation Interconnection Agreement shall include any amounts described as additional Security under this section 24.4 regarding income tax gross-up.

24.4.2 Amount:

The required additional Security shall be in an amount equal to the amount necessary to gross up fully for currently applicable federal and state income taxes the estimated Costs of any Transmission Owner Interconnection Facilities, Distribution Upgrades and/or Network Upgrades for which Project Developer previously provided Security. Accordingly, the additional Security shall equal the amount necessary to increase the total Security provided to the amount that would be sufficient to permit the Transmission Owner to receive and retain, after the payment of all applicable income taxes ("Current Taxes") and taking into account the present value of future tax deductions for depreciation that would be available as a result of the anticipated payments or property transfers (the "Present Value Depreciation Amount"), an amount equal to the estimated Costs of Transmission Owner Interconnection Facilities, Distribution Upgrades and/or Network Upgrades for which Project Developer is responsible under the Generation Interconnection Agreement. For this purpose, Current Taxes shall be computed based on the composite federal and state income tax rates applicable to the Transmission Owner at the time the additional Security is received, determined using the highest marginal rates in effect at that time (the "Current Tax Rate"); and the Present Value Depreciation Amount shall be computed by discounting the Transmission Owner's anticipated tax depreciation deductions associated with such payments or property transfers by its current weighted average cost of capital.

24.4.3 Time for Payment:

Project Developer must provide the additional Security, in a form and with terms as required by the GIP within 15 days after its receipt of Transmission Provider's notice under this section.

24.5 Tax Status:

Each Party shall cooperate with the other to maintain the other Party's tax status. Nothing in this Generation Interconnection Agreement or the GIP is intended to adversely affect any Transmission Owner's tax exempt status with respect to the issuance of bonds including, but not limited to, local furnishing bonds.

SCHEDULE A

GENERATING FACILITY LOCATION/SITE PLAN
Towanda, Franklin Township, Bradford County, PA

GPS: 41.7225, -76.5371

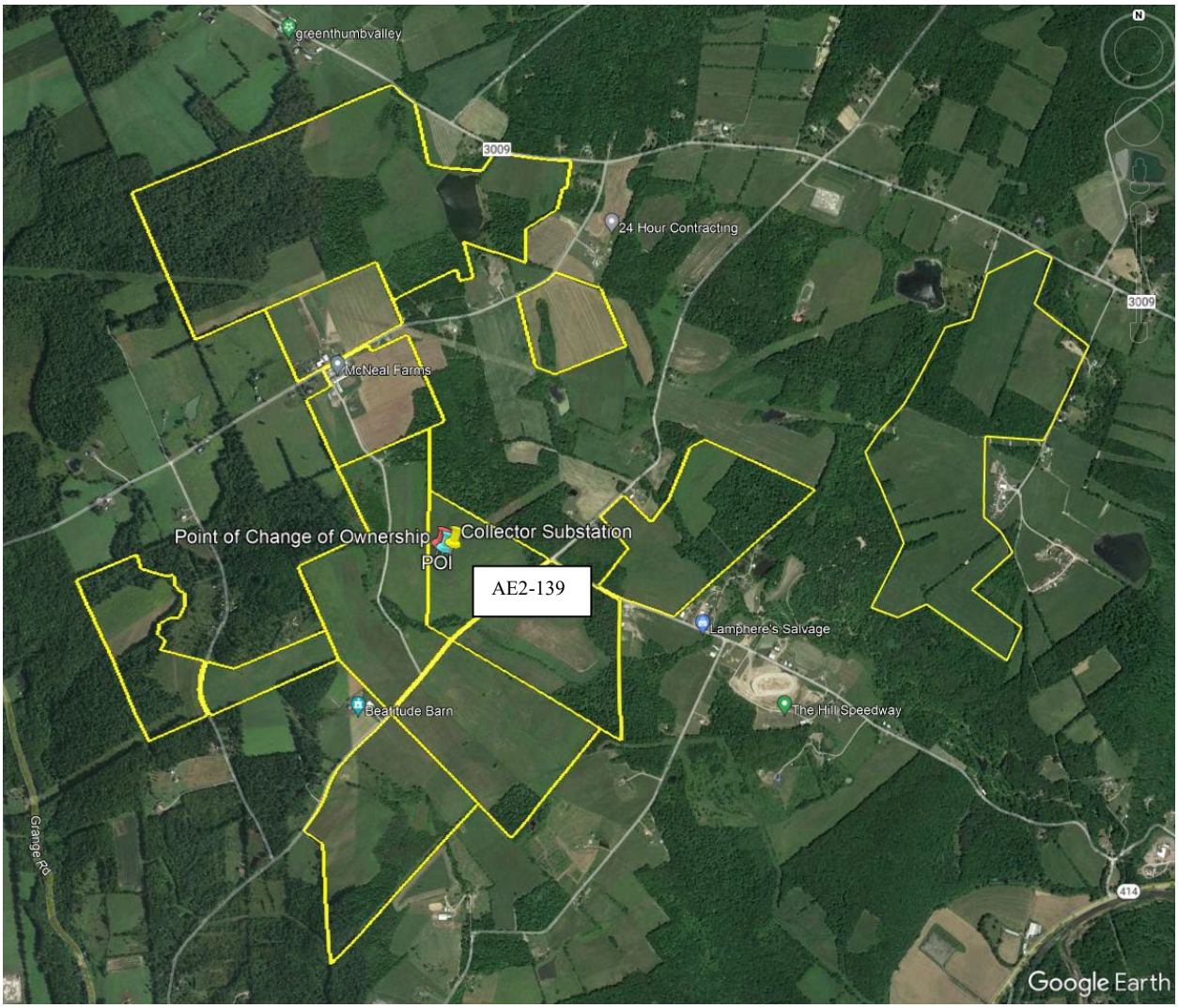

SCHEDULE B

SINGLE-LINE DIAGRAM

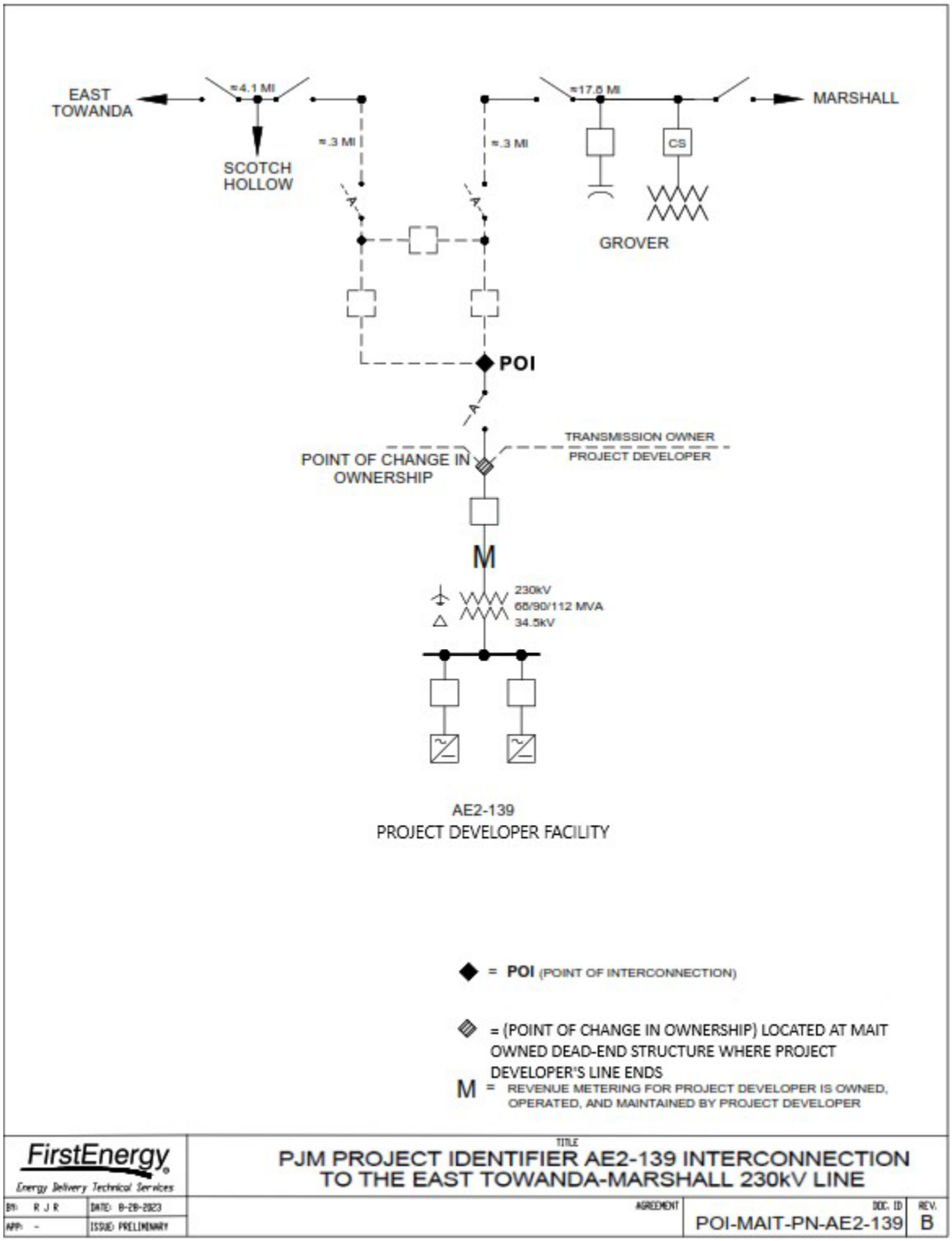

SCHEDULE C

LIST OF METERING EQUIPMENT

Project Developer shall install, own, operate, test and maintain the necessary revenue Metering Equipment to provide revenue metering (KWH, KVARH) and real time data (KW, KVAR) for the Project Developer's Generating Facility that comply with the requirements set forth in PJM Manuals M-01 and M-14D and Sections 8.1 through 8.5 of Appendix 2 to this GIA.

SCHEDULE D

APPLICABLE TECHNICAL REQUIREMENTS AND STANDARDS

The following technical requirements and standards shall apply. To the extent that these Applicable Technical Requirements and Standards conflict with the terms and conditions of the Tariff or any other provision of this GIA, the Tariff and/or this GIA shall control.

The FirstEnergy Transmission Planning and Protection Requirements for Transmission Connected Facilities dated January 18, 2023 shall apply and are available on the PJM website.

SCHEDULE E

SCHEDULE OF CHARGES

The Administration, Metering, Telemetering, and Operation and Maintenance ("O&M") charges referenced below refer to charges described in Section 10.1 of the Standard Terms and Conditions for Interconnections, which are contained in Appendix 2 of this GIA.

ADMINISTRATION CHARGES

The charges that MAIT would assess for Administration Charges would be its actual costs.

METERING CHARGES

The charges that MAIT would assess for Metering Charges would be its actual costs.

TELEMETERING CHARGES

The charges that MAIT would assess for Telemetering Charges would be its actual costs.

O&M CHARGES

MAIT reserves the right to charge its actual costs to the Project Developer for O&M expenses to maintain the Transmission Owner Interconnection Facilities.

SCHEDULE F

SCHEDULE OF NON-STANDARD TERMS & CONDITIONS

None

SCHEDULE G

PROJECT DEVELOPER'S AGREEMENT TO CONFORM WITH IRS SAFE HARBOR PROVISIONS FOR NON-TAXABLE STATUS

As provided in section 24.1 of Appendix 2 to this GIA and subject to the requirements thereof, Project Developer represents that it meets all qualifications and requirements as set forth in section 118(a) and 118(b) of the Internal Revenue Code of 1986, as amended and interpreted by Notice 2016-36, 2016-25 I.R.B. (6/20/2016) (the "IRS Notice"). Project Developer agrees to conform with all requirements of the safe harbor provisions specified in the IRS Notice, as they may be amended, as required to confer non-taxable status on some or all of the transfer of property, including money, by Project Developer to Transmission Owner with respect to the payment of the Costs of construction and installation of the Transmission Owner Interconnection Facilities and Transmission Owner Upgrades specified in this GIA.

Nothing in Project Developer's agreement pursuant to this Schedule G shall change Project Developer's indemnification obligations under section 24.2 of Appendix 2 to this GIA.

SCHEDULE H

INTERCONNECTION REQUIREMENTS FOR ALL WIND, SOLAR AND NON-SYNCHRONOUS GENERATION FACILITIES

A. Voltage Ride Through Requirements

The Generating Facility shall be designed to remain in service (not trip) for voltages and times as specified for the Eastern Interconnection in Attachment 1 of NERC Reliability Standard PRC-024-1, and successor Reliability Standards, for both high and low voltage conditions, irrespective of generator size, subject to the permissive trip exceptions established in PRC-024-1 (and successor Reliability Standards).

B. Frequency Ride Through Requirements

The Generating Facility shall be designed to remain in service (not trip) for frequencies and times as specified in Attachment 2 of NERC Reliability Standard PRC-024-1, and successor Reliability Standards, for both high and low frequency condition, irrespective of generator size, subject to the permissive trip exceptions established in PRC-024-1 (and successor Reliability Standards).

C. Supervisory Control and Data Acquisition ("SCADA") Capability

The wind, solar or non-synchronous generation facility shall provide SCADA capability to transmit data and receive instructions from the Transmission Provider to protect system reliability. The Transmission Provider and the wind, solar or non-synchronous generation facility Project Developer shall determine what SCADA information is essential for the proposed wind, solar or non-synchronous generation facility, taking into account the size of the facility and its characteristics, location, and importance in maintaining generation resource adequacy and transmission system reliability in its area.

D. Meteorological Data Reporting Requirement (Applicable to wind generation facilities only)

The wind generation facility shall, at a minimum, be required to provide the Transmission Provider with site-specific meteorological data including:

- Temperature (degrees Fahrenheit)
- Wind speed (meters/second)
- Wind direction (degrees from True North)
- Atmosphere pressure (hectopascals)
- Forced outage data (wind turbine and MW unavailability)

E. Meteorological Data Reporting Requirement (Applicable to solar generation facilities only)

The solar generation facility shall, at a minimum, be required to provide the Transmission Provider with site-specific meteorological data including:

- Temperature (degrees Fahrenheit)
- Irradiance
- Forced outage data

The Transmission Provider and Project Developer may mutually agree to any additional meteorological data that are required for the development and deployment of a power production forecast. All requirements for meteorological and forced outage data must be commensurate with the power production forecasting employed by the Transmission Provider. Such additional mutually agreed upon requirements for meteorological and forced outage data are set forth below: NOT APPLICABLE UNDER THIS GIA

SCHEDULE I

INTERCONNECTION SPECIFICATIONS FOR AN ENERGY STORAGE RESOURCE

Not Required

SCHEDULE J

SCHEDULE OF TERMS AND CONDITIONS FOR SURPLUS INTERCONNECTION SERVICE

Not Required

SCHEDULE K

REQUIREMENTS FOR INTERCONNECTION SERVICE BELOW FULL ELECTRICAL GENERATING CAPABILITY

Not Required

SCHEDULE L

INTERCONNECTION CONSTRUCTION TERMS AND CONDITIONS

INTERCONNECTION CONSTRUCTION TERMS AND CONDITIONS
For the Generation Interconnection Agreement
By and Between
PJM Interconnection, L.L.C.
And
Bradford Solar LLC
And
Mid-Atlantic Interstate Transmission, LLC

(Project Identifier #AE2-139)

1.0 These Interconnection Construction Terms and Conditions ("IC Terms & Conditions"), including the Schedules and Appendices attached hereto or incorporated by reference herein, shall apply to the Generation Interconnection Agreement ("GIA") by and between Transmission Provider, Project Developer, and Transmission Owner. All capitalized terms herein shall have the meanings set forth in Appendix 1 to this Generation GIA.

2.0 The standard terms and conditions for construction included in Appendix 2 of the GIA associated with this Interconnection Request are hereby specifically incorporated herein.

3.0 Generating Facility or Merchant Transmission Facility. These IC Terms & Conditions specifically relate to the following Generating Facility or Merchant Transmission Facility at the following location:

a. Name of Generating Facility or Merchant Transmission Facility:

Bradford Solar

b. Location of Generating Facility or Merchant Transmission Facility:

GPS: 41.7225, -76.5371

Towanda, Franklin Township, Bradford County, PA

4.0 Commencement of Construction.

4.1 The Transmission Owner shall have no obligation to begin construction of the Transmission Owner Interconnection Facilities and Transmission Owner Upgrades prior to the Effective Date of this GIA. Construction shall commence as provided in the Schedule of Work set forth in section 8.0 of these IC Terms & Conditions.

5.0 Construction Responsibility for

a. Project Developer Interconnection Facilities. Project Developer is responsible for designing and constructing the Project Developer Interconnection Facilities described in Specifications section 3.0(a)(1) of this GIA.

b. Construction of Transmission Owner Interconnection Facilities.

1. The Transmission Owner Interconnection Facilities and Transmission Owner Upgrades for which Transmission Owner shall be responsible for constructing are described in Specifications section 3.0(b) of this GIA.

2. Election of Construction Option. Specify below whether the Project Developer and Transmission Owner have mutually agreed to construction of the Transmission Owner Interconnection Facilities and Transmission Owner Upgrades that will be built by the Transmission Owner pursuant to the Standard Option or the Negotiated Contract Option.

___X__ Standard Option.

_____ Negotiated Contract Option.

If the parties have mutually agreed to use the Negotiated Contract Option, the permitted, negotiated terms on which they have agreed and which are not already set forth as part of the Scope of Work and/or Schedule of Work set forth in sections 7.0 and 8.0 of these IC Terms & Conditions shall be as set forth in Appendix 1 to this Schedule L.

3. Exercise of Option to Build. Has Project Developer timely exercised the Option to Build?

__X___ Yes

_____ No

If Yes is indicated, Project Developer shall build, in accordance with and subject to the conditions and limitations set forth in section 11.2.3 of this Schedule L, those portions of the Transmission Owner Interconnection Facilities and Stand Alone described in Specifications section 3.0(a)(2) of this GIA.

6.0 Facilitation by Transmission Provider: Transmission Provider shall keep itself apprised of the status of the Transmission Owner's and Project Developer's construction-related activities and, upon request of either of them, Transmission Provider shall meet with the Transmission Owner and Project Developer separately or together to assist them in resolving issues between them regarding their respective activities, rights and obligations under this Schedule L and Appendix 2 of the this GIA. Each of Transmission Owner and Project Developer shall cooperate in good faith with the other in Transmission Provider's efforts to facilitate resolution of disputes.

7.0 Scope of Work. The Scope of Work for all construction shall be as set forth in Specifications section 3.0 of this GIA, provided, however, that the scope of work is subject

to change in accordance with Transmission Provider's scope change process for interconnection projects as set forth in the PJM Manuals. The scope change process is intended to be used for changes to the Scope of Work as defined herein, and is not intended to be used to change any of the milestone set forth in the GIA. Any change to the Scope of Work must be agreed to by all Parties in writing by executing a scope change document.

8.0 Schedule of Work. The Schedule of Work for all construction is set forth below, provided, however, that such schedule is subject to change in accordance with section 11.3 of this Schedule L.

Transmission Owner:

Transmission Owner shall commence the scope of work identified in Specifications, section 3.0(b) one month after both full execution of this GIA and completion of the construction kickoff call.

Transmission Owner shall complete all Transmission Owner Interconnection Facilities, Standalone Network Upgrades, and Network Upgrades set forth in Specifications, section 3.0(b) of this GIA and provide back feed to Project Developer's Generating Facilities by September 1, 2026.

Project Developer:

Project Developer shall complete all Project Developer Interconnection Facilities set forth in Specifications, section 3.0(a) of this GIA and all Transmission Owner Interconnection Facilities, Standalone Network Upgrades, and Network Upgrades to be built by Project Developer pursuant to Option to Build set forth in Specifications, section 3.0(a) of this GIA by July 1, 2026.

9.0 If Project Developer exercises the Option to Build, Project Developer shall pay Transmission Owner for Transmission Owner to execute the responsibilities enumerated to Transmission Owner under section 11.2.3.

10.0 Construction Obligations

10.1 Project Developer Obligations: Project Developer shall, at its sole cost and expense, design, procure, construct, own, and install the Generating Facility or Merchant Transmission Facility and the Project Developer Interconnection Facilities in accordance with this GIA, Applicable Standards, Applicable Laws and Regulations, Good Utility Practice, the Scope of Work, and the System Impact Study(ies) (to the extent that design of the Project Developer Interconnection Facilities is included therein), provided, however, that, in the event and to the extent that the Generating Facility or Merchant Transmission Facility is comprised of or includes Merchant Network Upgrades, subject to the terms of section 11.2.3 of this

Schedule L, the Transmission Owner shall design, procure, construct and install such Merchant Network Upgrades.

10.2 Transmission Owner Interconnection Facilities and Transmission Owner Upgrades

10.2.1 Generally: All Transmission Owner Interconnection Facilities and Transmission Owner Upgrades necessary for the interconnection of the Generating Facility or Merchant Transmission Facility shall be designed, procured, installed and constructed in accordance with this GIA, Applicable Standards, Applicable Laws and Regulations, Good Utility Practice, the System Impact Study(ies), and the Scope of Work.

10.2.2 Cost Responsibility: Responsibility for the Costs of the Transmission Owner Interconnection Facilities and Transmission Owner Upgrades shall be assigned in accordance with the GIP, as applicable, and shall be stated in this GIA.

10.2.3 Construction Responsibility: Except as otherwise permitted under, or as otherwise agreed upon by the Project Developer and the Transmission Owner pursuant to this GIA, the Transmission Owner shall be responsible for the design, procurement, construction and installation of the Transmission Owner Interconnection Facilities and Transmission Owner Upgrades. In the event that there are multiple Transmission Owners, the Transmission Provider shall determine how to allocate the construction responsibility among them unless they have reached agreement among themselves on how to proceed.

10.2.4 Ownership of Transmission Owner Interconnection Facilities and Transmission Owner Upgrades: The Transmission Owner shall own all Transmission Owner Interconnection Facilities and Transmission Owner Upgrades that it builds. In addition, the Project Developer will convey to the Transmission Owner, as provided in section 23.3.5 of Appendix 2 of this GIA, title to all Transmission Owner Interconnection Facilities and Transmission Owner Upgrades built by the Project Developer pursuant to the terms of this Schedule L. Nothing in this section shall affect the interconnection rights otherwise available to a Transmission Project Developer under the GIP.

10.2A Scope of Applicable Technical Requirements and Standards: Applicable Technical Requirements and Standards shall apply to the design, procurement, construction and installation of the Interconnection Facilities, Transmission Owner Upgrades and Merchant A.C. Transmission Facilities only to the extent that the provisions thereof relate to the design, procurement, construction and/or installation of such facilities. Such provisions relating to the design, procurement, construction and/or installation of facilities shall be appended as Schedule D to this GIA. The Interconnection Parties shall mutually agree upon, or in the absence of such

agreement, Transmission Provider shall determine, which provisions of the Applicable Technical Requirements and Standards should be identified in this GIA. In the event of any conflict between the provisions of the Applicable Technical Requirements and Standards that are appended as Schedule D to this GIA and any later-modified provisions that are stated in the pertinent PJM Manual, the provisions appended as Schedule D to this GIA shall control.

10.3 Construction by Project Developer

10.3.1 Construction Prior to Execution of GIA: If the Project Developer procures materials for, and/or commences construction of, the Project Developer Interconnection Facilities, any Transmission Owner Interconnection Facilities or Stand Alone Network Upgrades that it has elected to construct by exercising the Option to Build, or for any subsequent modification thereto, prior to the execution of this GIA or, if this GIA has been executed, before the Transmission Owner and Transmission Provider have accepted the Project Developer's initial design, or any subsequent modification to the design, of such Interconnection Facilities or Stand Alone Network Upgrades, such procurement and/or construction shall be at the Project Developer's sole risk, cost and expense.

10.3.2 Monitoring and Inspection: The Transmission Owner may monitor construction and installation of Interconnection Facilities and Transmission Owner Upgrades that the Project Developer is constructing. Upon reasonable notice, authorized personnel of the Transmission Owner may inspect any or all of such Interconnection Facilities and Transmission Owner Upgrades to assess their conformity with Applicable Standards.

10.3.3 Notice of Completion: The Project Developer shall notify the Transmission Provider and the Transmission Owner in writing when it has completed construction of (i) the Generating Facility or Merchant Transmission Facility; (ii) the Project Developer Interconnection Facilities; and (iii) any Transmission Owner Interconnection Facilities and Stand Alone for which it has exercised the Option to Build.

10.4 Construction-Related Access Rights: The Transmission Owner and the Project Developer herein grant each other at no charge such rights of access to areas that it owns or otherwise controls as may be necessary for performance of their respective obligations, and exercise of their respective rights, pursuant to this Schedule L, provided that either of them performing the construction will abide by the safety, security and work rules applicable to the area where construction activity is occurring.

10.5 Coordination Among Parties: The Transmission Provider, the Project Developer, and all Transmission Owners shall communicate and coordinate their activities as necessary to satisfy their obligations under this Schedule L.

11.0 Construction Requirements

11.1 Construction by Project Developer:

The Project Developer shall use Reasonable Efforts to design, procure, construct and install the Project Developer Interconnection Facilities and any Transmission Owner Interconnection Facilities and Stand Alone Network Upgrades that it elects to build by exercise of the Option to Build (defined in section 11.2.3.1 below) in accordance with the Schedule of Work.

11.2 Construction by Transmission Owner

11.2.1 Standard Option:

The Transmission Owner shall use Reasonable Efforts to design, procure, construct and install the Transmission Owner Interconnection Facilities and Transmission Owner Upgrades that it is responsible for constructing in accordance with the Schedule of Work.

11.2.1.1 Construction Sequencing:

In general, the sequence of the proposed dates of Initial Operation of Project Developers seeking interconnection to the Transmission System will determine the sequence of construction of Network Upgrades.

11.2.2 Negotiated Contract Option:

As an alternative to the Standard Option set forth in section 11.2.1 above, the Transmission Owner and the Project Developer may mutually agree to a Negotiated Contract Option for the Transmission Owner's design, procurement, construction and installation of the Transmission Owner Interconnection Facilities and Transmission Owner Upgrades. Under the Negotiated Contract Option, the Project Developer and the Transmission Owner may agree to terms different from those included in the Standard Option of section 11.2.1 above and the corresponding standard terms set forth in the applicable provisions of the GIP. Under the Negotiated Contract Option, negotiated terms may include the work schedule applicable to the Transmission Owner's construction activities and changes to same; payment provisions, including the schedule of payments; incentives, penalties and/or liquidated damages related to timely completion of construction; use of third party contractors; and responsibility for Costs, but only as between the Project Developer and the Transmission Owner that are parties to this GIA; no other Project Developer's responsibility for Costs may be affected. No other terms of the Tariff or this Schedule L shall be subject to modification under the Negotiated Contract Option. The terms and conditions of the Tariff that may be negotiated pursuant to the Negotiated Contract Option shall not be affected by use of the

Negotiated Contract Option except as and to the extent that they are modified by the parties' agreement pursuant to such option. All terms agreed upon pursuant to the Negotiated Contract Option are set forth in Schedule L, Appendix 1 to this GIA. The Negotiated Option can only be used in connection with a Network Upgrade subject to the Network Upgrade Cost Responsibility Agreement all Project Developers and the relevant Transmission Owner agree.

11.2.3 Option to Build

11.2.3.1 Option:

Project Developer has the option ("Option to Build") to assume responsibility for the design, procurement, and construction of Transmission Owner Interconnection Facilities and Stand Alone Network Upgrades on the dates specified in the Schedule of Work in section 8.0 of this Schedule L. Transmission Provider and Project Developer must agree as to what constitutes Stand Alone Network Upgrades and identify such Stand Alone Network Upgrades in Specifications section 3.0(a)(2) of this GIA. If the Transmission Provider and Project Developer disagree about whether a particular Network Upgrade is a Stand Alone Network Upgrade, the Transmission Provider must provide the Project Developer with a written technical explanation outlining why the Transmission Provider does not consider the Network Upgrade to be a Stand Alone Network Upgrade within 15 days of its determination. Except for Stand Alone Network Upgrades, Project Developer shall have no right to construct Network Upgrades under this option. In order to exercise this Option to Build, Project Developer must provide Transmission Provider and the Transmission Owner with written notice of Project Developer's election to exercise the option consistent with the deadline applicable to its New Service Request or Upgrade Request. Project Developer may not elect Option to Build after such date.

11.2.3.2 General Conditions Applicable to Option:

In addition to the other terms and conditions applicable to the construction of facilities under this Schedule L, the Option to Build is subject to the following conditions:

(a) If the Project Developer assumes responsibility for the design, procurement and construction of Transmission Owner Interconnection Facilities and Stand Alone Network Upgrades:

(i) Project Developer shall engineer, procure equipment, and construct Transmission Owner Interconnection Facilities and Stand Alone Network Upgrades (or portions thereof) using Good Utility

Practice and using standards and Specifications provided in advance by Transmission Owner;

(ii) Project Developer's engineering, procurement and construction of Transmission Owner Interconnection Facilities and Stand Alone Network Upgrades shall comply with all requirements of law to which Transmission Owner shall be subject in the engineering, procurement or construction of Transmission Owner Interconnection Facilities and Stand Alone Network Upgrades;

(iii) Transmission Owner shall review and approve engineering design, equipment acceptance tests, and the construction of Transmission Owner Interconnection Facilities and Stand Alone Network Upgrades;

(iv) Prior to commencement of construction, Project Developer shall provide to Transmission Owner a schedule for construction of Transmission Owner Interconnection Facilities and Stand Alone Network Upgrades and shall promptly respond to requests for information from Transmission Owner;

(v) At any time during construction, Transmission Owner shall have the right to gain unrestricted access to Transmission Owner Interconnection Facilities and Stand Alone Network Upgrades and to conduct inspections of the same;

(vi) At any time during construction, should any phase of the engineering, equipment procurement, or construction of Transmission Owner Interconnection Facilities and Stand Alone Network Upgrades not meet the standards and Specifications provided by Interconnection Transmission Owner, Project Developer shall be obligated to remedy deficiencies in that portion of the Transmission Owner Interconnection Facilities and Stand Alone Network Upgrades;

(vii) Project Developer shall indemnify Transmission Owner and Transmission Provider for claims arising from Project Developer's construction of Transmission Owner Interconnection Facilities and Stand Alone Network Upgrades under the terms and procedures applicable to section 14 of Appendix 2 of this GIA;

(viii) Project Developer shall transfer control of Transmission Owner Interconnection Facilities and Stand Alone Network Upgrades to Transmission Owner;

(ix) Unless Parties otherwise agree, Project Developer shall transfer ownership of Transmission Owner Interconnection Facilities and Stand Alone Network Upgrades to Transmission Owner;

(x) Transmission Owner shall approve and accept for operation and maintenance Transmission Owner Interconnection Facilities and Stand Alone Network Upgrades to the extent engineered, procured, and constructed in accordance with section 11.2.3.2 of this Schedule L; and

(xi) Project Developer shall deliver to Transmission Owner "as-built" drawings, information, and any other documents that are reasonably required by Transmission Provider to assure that the Transmission Owner Interconnection Facilities and Stand Alone Network Upgrades are built to the standards and Specifications required by Transmission Provider.

(b) In addition to the General Conditions applicable to Option to Build set forth in section 11.2.3.2(a) above, the following conditions also apply:

(i) The Project Developer must obtain or arrange to obtain all necessary permits and authorizations for the construction and installation of the Transmission Owner Interconnection Facilities and Stand Alone Network Upgrades that it is building, provided, however, that when the Transmission Owner's assistance is required, the Transmission Owner shall assist the Project Developer in obtaining such necessary permits or authorizations with efforts similar in nature and extent to those that the Transmission Owner typically undertakes in acquiring permits and authorizations for construction of facilities on its own behalf;

(ii) The Project Developer must obtain all necessary land rights for the construction and installation of the Transmission Owner Interconnection Facilities and Stand Alone Network Upgrades that it is building, provided, however, that upon Project Developer's reasonable request, the Transmission Owner shall assist the Project Developer in acquiring such land rights with efforts similar in nature and extent to those that the Transmission Owner typically undertakes in acquiring land rights for construction of facilities on its own behalf;

(iii) Notwithstanding anything stated herein, each Transmission Owner shall have the exclusive right and obligation to perform the line attachments (tie-in work), and to calibrate remote terminal units and relay settings, required for the interconnection to such Transmission Owner's existing facilities of any Transmission Owner Interconnection Facilities and Stand Alone Network Upgrades that the Project Developer builds; and

(iv) The Transmission Owner Interconnection Facilities and Stand Alone Network Upgrades built by the Project Developer shall be successfully inspected, tested and energized pursuant to sections 11.7 and 11.8 of this Schedule L.

11.2.3.3 Additional Conditions Regarding Network Facilities:

To the extent that the Project Developer utilizes the Option to Build for design, procurement, construction and/or installation of (a) any Transmission Owner Interconnection Facilities that are Stand Alone Network Upgrades to Transmission System facilities that are in existence or under construction by or on behalf of the Transmission Owner on the date that the Project Developer solicits bids under section 11.2.3.7 below, or (b) Transmission Owner Interconnection Facilities and Stand Alone Network Upgrades that are to be located on land or in right-of-way owned or controlled by the Transmission Owner, and in addition to the other terms and conditions applicable to the design, procurement, construction and/or installation of facilities under this GIA, all work shall comply with the following further conditions:

(i) All work performed by or on behalf of the Project Developer shall be conducted by contractors, and using equipment manufacturers or vendors, that are listed on the Transmission Owner's List of Approved Contractors;

(ii) The Transmission Owner shall have full site control of, and reasonable access to, its property at all times for purposes of tagging or operation, maintenance, repair or construction of modifications to, its existing facilities and/or for performing all tie-ins of Interconnection Facilities and Stand Alone Network Upgrades built by or for the Project Developer; and for acceptance testing of any equipment that will be owned and/or operated by the Transmission Owner;

(iii) The Transmission Owner shall have the right to have a reasonable number of appropriate representatives present for all work done on its property/facilities or regarding the Transmission Owner Interconnection Facilities and Stand Alone Network Upgrades and the right to stop, or to order corrective measures with respect to, any such work that reasonably could be expected to have an adverse effect on reliability, safety or security of persons or of property of the Transmission Owner or any portion of the Transmission System, provided that, unless circumstances do not reasonably permit such consultations, the Transmission Owner shall consult with the Project Developer and with Transmission Provider before directing that work be stopped or ordering any corrective measures;

(iv) The Project Developer and its contractors, employees and agents shall comply with the Transmission Owner's safety, security and work rules, environmental guidelines and training requirements applicable to the area(s) where construction activity is occurring and shall provide all reasonably required documentation to the Transmission Owner, provided that the Transmission Owner previously has provided its safety, security and work rules and training requirements applicable to work on its facilities to Transmission Provider and the Project Developer within 20 Business Days after a request therefor made by Project Developer;

(v) The Project Developer shall be responsible for controlling the performance of its contractors, employees and agents; and

(vi) All activities performed by or on behalf of the Project Developer pursuant to its exercise of the Option to Build shall be subject to compliance with Applicable Laws and Regulations, including those governing union staffing and bargaining unit obligations, and Applicable Standards.

11.2.3.4 Administration of Conditions:

To the extent that the Transmission Owner exercises any discretion in the application of any of the conditions stated in sections 11.2.3.2 and 11.2.3.3 of this Schedule L, it shall apply each such condition in a manner that is reasonable and not unduly discriminatory and it shall not unreasonably withhold, condition, or delay any approval or authorization that the Project Developer may require for the purpose of complying with any of those conditions.

11.2.3.5 Approved Contractors:

(a) Each Transmission Owner shall develop and shall provide to Transmission Provider a List of Approved Contractors. Each Transmission Owner shall include on its List of Approved Contractors no fewer than three contractors and no fewer than three manufacturers or vendors of major transmission-related equipment, unless a Transmission Owner demonstrates to Transmission Provider's reasonable satisfaction that it is feasible only to include a lesser number of construction contractors, or manufacturers or vendors, on its List of Approved Contractors. Transmission Provider shall publish each Transmission Owner's List of Approved Contractors in a PJM Manual and shall make such manual available on its internet website.

(b) Upon request of a Project Developer, a Transmission Owner shall add to its List of Approved Contractors (1) any design or construction contractor regarding which the Project Developer provides such

information as the Transmission Owner may reasonably require which demonstrates to the Transmission Owner's reasonable satisfaction that the candidate contractor is qualified to design, or to install and/or construct new facilities or upgrades or modifications to existing facilities on the Transmission Owner's system, or (2) any manufacturer or vendor of major transmission-related equipment (e.g., high-voltage transformers, transmission line, circuit breakers) regarding which the Project Developer provides such information as the Transmission Owner may reasonably require which demonstrates to the Transmission Owner's reasonable satisfaction that the candidate entity's major transmission-related equipment is acceptable for installation and use on the Transmission Owner's system. No Transmission Owner shall unreasonably withhold, condition, or delay its acceptance of a contractor, manufacturer, or vendor proposed for addition to its List of Approved Contractors.

11.2.3.6 Construction by Multiple Project Developers:

In the event that there are multiple Project Developers that wish to exercise an Option to Build with respect to Interconnection Facilities and Stand Alone Network Upgrades of the types described in section 11.2.3.3 of this Schedule L, the Transmission Provider shall determine how to allocate the construction responsibility among them unless they reach agreement among themselves on how to proceed.

11.2.3.7 Option Procedures:

(a) Within 10 days after executing this GIA or directing that this GIA be filed with FERC unexecuted, Project Developer shall solicit bids from one or more Approved Contractors named on the Transmission Owner's List of Approved Contractors to procure equipment for, and/or to design, construct and/or install, the Transmission Owner Interconnection Facilities and Stand Alone Network Upgrades that the Project Developer seeks to build under the Option to Build on terms (i) that will meet the Project Developer's proposed schedule; (ii) that, if the Project Developer seeks to have an Approved Contractor construct or install Transmission Owner Interconnection Facilities and Stand Alone Network Upgrades, will satisfy all of the conditions on construction specified in sections 11.2.3.2 and 11.2.3.3 of this Schedule L; and (iii) that will satisfy the obligations of a Constructing Entity (other than those relating to responsibility for the costs of facilities).

(b) Any additional costs arising from the bidding process or from the final bid of the successful Approved Contractor shall be the sole responsibility of the Project Developer.

(c) Upon receipt of a qualifying bid acceptable to it, the Project Developer shall contract with the Approved Contractor that submitted the qualifying bid. Such contract shall meet the standards stated in paragraph (a) of this section.

(d) In the absence of a qualifying bid acceptable to the Project Developer in response to its solicitation, the Transmission Owner(s) shall be responsible for the design, procurement, construction and installation of the Transmission Owner Interconnection Facilities and Stand Alone Network Upgrades in accordance with the Standard Option described in section 11.2.1 of this Schedule L.

11.2.3.8 Project Developer Drawings:

Project Developer shall submit to the Transmission Owner and Transmission Provider initial drawings, certified by a professional engineer, of the Transmission Owner Interconnection Facilities and Stand that Project Developer arranges to build under this Option to Build. The Transmission Owner shall review and approve the initial drawings and engineering design of the Transmission Owner Interconnection Facilities and Stand Alone Network Upgrades to be constructed under the Option to Build. The Transmission Owner shall review the drawings to assess the consistency of Project Developer's design of the pertinent Transmission Owner Interconnection Facilities and Stand Alone Network Upgrades with Applicable Standards and the System Impact Study(ies). Transmission Owner, with facilitation and oversight by Transmission Provider, shall provide comments on such drawings to Project Developer within 60 days after its receipt thereof, after which time any drawings not subject to comment shall be deemed to be approved. All drawings provided hereunder shall be deemed to be Confidential Information.

11.2.3.9 Effect of Review:

Transmission Owner's review of Project Developer's initial drawings of the Transmission Owner Interconnection Facilities and Stand Alone Network Upgrades that the Project Developer is building shall not be construed as confirming, endorsing or providing a warranty as to the fitness, safety, durability or reliability of such facilities or the design thereof. At its sole cost and expense, Project Developer shall make such changes to the design of the pertinent Transmission Owner Interconnection Facilities and Stand Alone Network Upgrades as may reasonably be required by Transmission Provider, in consultation with the Transmission Owner, to ensure that the Transmission Owner Interconnection Facilities and Stand Alone Network Upgrades that Project Developer is building meet Applicable Standards and conform with the System Impact Study(ies).

11.3 Revisions to Schedule of Work:

The Schedule of Work shall be revised as required in accordance with Transmission Provider's scope change process for interconnection projects set forth in the PJM Manuals, or otherwise by mutual agreement of the Interconnection Parties, which agreement shall not be unreasonably withheld, conditioned or delayed. The scope change process is intended to be used for changes to the Scope of Work as defined herein, and is not intended to be used to change any of the milestone set forth in the GIA.

11.4 Right to Complete Transmission Owner Interconnection Facilities and Transmission Owner Upgrades:

In the event that, at any time prior to successful Stage Two energization of the Transmission Owner Interconnection Facilities and Transmission Owner Upgrades pursuant to section 11.8 of this Schedule L, the Project Developer terminates its obligations under this GIA pursuant to Appendix 2, section 16.1.2 of this GIA due to a Default by the Transmission Owner, the Project Developer may elect to complete the design, procurement, construction and installation of the Transmission Owner Interconnection Facilities and Transmission Owner Upgrades. The Project Developer shall notify the Transmission Owner and Transmission Provider in writing of its election to complete the Transmission Owner Interconnection Facilities and Transmission Owner Upgrades within 10 days after the date of Project Developer's notice of termination pursuant to Appendix 2, section 16.2.of this GIA. In the event that the Project Developer elects to complete the Transmission Owner Interconnection Facilities and Transmission Owner Upgrades, it shall do so in accordance with the terms and conditions of the Option to Build under section 11.2.3 of this Schedule L and shall be responsible for paying all costs of completing the Transmission Owner Interconnection Facilities and Transmission Owner Upgrades incurred after the date of its notice of election to complete the facilities. Project Developer may take possession of, and may use in completing the Transmission Owner Interconnection Facilities, any materials and supplies and equipment (other than equipment and facilities that already have been installed or constructed) acquired by the Transmission Owner for construction, and included in the Costs, of the Transmission Owner Interconnection Facilities and Stand Alone Network Upgrades, provided that Project Developer shall pay Transmission Provider, for the benefit of the Transmission Owner and upon presentation by Transmission Owner of reasonable and appropriate documentation thereof, any amounts expended by the Transmission Owner for such materials, supplies and equipment that Project Developer has not already paid. Title to all Transmission Owner Interconnection Facilities and Transmission Owner Upgrades constructed by Project Developer under this section 11 shall be transferred to the Transmission Owner in accordance with Appendix 2, section 23.3.5 of this GIA.

11.5 Suspension of Work upon Default:

Upon the occurrence of a Default by Project Developer as defined in Appendix 2, section 16 of this GIA, the Transmission Provider or the Transmission Owner may by written notice to Project Developer suspend further work associated with the construction and

installation of the Transmission Owner Interconnection Facilities and Transmission Owner Upgrades that the Transmission Owner is responsible for constructing. Such suspension shall not constitute a waiver of any termination rights under this GIA. In the event of a suspension by Transmission Provider or Transmission Owner, the Project Developer shall be responsible for the Costs incurred in connection with any suspension hereunder in accordance with Appendix 2, section 16 of this GIA.

11.6 Construction Reports:

Each of Project Developer and Transmission Owner shall issue reports to each other on a monthly basis, and at such other times as reasonably requested, regarding the status of the construction and installation of the Interconnection Facilities and Transmission Owner Upgrades. Each of Project Developer and Transmission Owner shall promptly identify, and shall notify each other of, any event that the party reasonably expects may delay completion, or may significantly increase the cost, of the Interconnection Facilities and Transmission Owner Upgrades. Should either Project Developer or Transmission Owner report such an event, Transmission Provider shall, within 15 days of such notification, convene a technical meeting with Project Developer and Transmission Owner to evaluate schedule alternatives.

11.7 Inspection and Testing of Completed Facilities

11.7.1 Coordination:

Project Developer and the Transmission Owner shall coordinate the timing and schedule of all inspection and testing of the Interconnection Facilities and Transmission Owner Upgrades.

11.7.2 Inspection and Testing:

Each of Project Developer and Transmission Owner shall cause inspection and testing of the Interconnection Facilities and Transmission Owner Upgrades that it constructs in accordance with the provisions of this section. Project Developer and Transmission Owner acknowledge and agree that inspection and testing of facilities may be undertaken as facilities are completed and need not await completion of all of the facilities that a party is building.

11.7.2.1 Of Project Developer-Built Facilities:

Upon the completion of the construction and installation, but prior to energization, of any Interconnection Facilities and Transmission Owner Upgrades constructed by the Project Developer and related portions of the Generating Facility or Merchant Transmission Facility, the Project Developer shall have the same inspected and/or tested by an authorized electric inspection agency or qualified third party reasonably acceptable to the Transmission Owner to assess whether the facilities substantially

comply with Applicable Standards. Said inspection and testing shall be held on a mutually agreed-upon date, and the Transmission Owner and Transmission Provider shall have the right to attend and observe, and to obtain the written results of, such testing.

11.7.2.2 Of Transmission Owner-Built Facilities:

Upon the completion of the construction and installation, but prior to energization, of any Interconnection Facilities and Transmission Owner Upgrades constructed by the Transmission Owner, the Transmission Owner shall have the same inspected and/or tested by qualified personnel or a qualified contractor to assess whether the facilities substantially comply with Applicable Standards. Subject to Applicable Laws and Regulations, said inspection and testing shall be held on a mutually agreed-upon date, and the Project Developer and Transmission Provider shall have the right to attend and observe, and to obtain the written results of, such testing.

11.7.3 Review of Inspection and Testing by Transmission Owner:

In the event that the written report, or the observation of either of Project Developer and Transmission Owner or Transmission Provider, of the inspection and/or testing pursuant to section 11.7.2 of this Schedule L reasonably leads the Transmission Provider or Transmission Owner to believe that the inspection and/or testing of some or all of the Interconnection Facilities and Stand Alone Network Upgrades built by the Project Developer was inadequate or otherwise deficient, the Transmission Owner may, within 20 days after its receipt of the results of inspection or testing and upon reasonable notice to the Project Developer, perform its own inspection and/or testing of such Interconnection Facilities and Stand Alone Network Upgrades to determine whether the facilities are acceptable for energization, which determination shall not be unreasonably delayed, withheld or conditioned.

11.7.4 Notification and Correction of Defects

11.7.4.1 If the Transmission Owner, based on inspection or testing pursuant to section 11.7.2 or 11.7.3 of this Schedule L, identifies any defects or failures to comply with Applicable Standards in the Interconnection Facilities and Stand Alone Network Upgrades constructed by the Project Developer, the Transmission Owner shall notify the Project Developer and Transmission Provider of any identified defects or failures within 20 days after the Transmission Owner's receipt of the results of such inspection or testing. The Project Developer shall take appropriate actions to correct any such defects or failure at its sole cost and expense, and shall obtain the Transmission Owner's acceptance of the corrections, which acceptance shall not be unreasonably delayed, withheld or conditioned. Such acceptance does not modify and shall not limit the Project Developer's

indemnification obligations set forth in section 11.2.3.2(a) of this Schedule L.

11.7.4.2 In the event that inspection and/or testing of any Transmission Owner Interconnection Facilities and Transmission Owner Upgrades built by the Transmission Owner identifies any defects or failures to comply with Applicable Standards in such facilities, Transmission Owner shall take appropriate action to correct any such defects or failures within 20 days after it learns thereof. In the event that such a defect or failure cannot reasonably be corrected within such 20-day period, Transmission Owner shall commence the necessary correction within that time and shall thereafter diligently pursue it to completion.

11.7.5 Notification of Results:

Within 10 days after satisfactory inspection and/or testing of Interconnection Facilities and Stand Alone Network Upgrades built by the Project Developer (including, if applicable, inspection and/or testing after correction of defects or failures), the Transmission Owner shall confirm in writing to the Project Developer and Transmission Provider that the successfully inspected and tested facilities are acceptable for energization.

11.8 Energization of Completed Facilities

(A) Unless otherwise provided in the Schedule of Work, energization of the Interconnection Facilities and Transmission Owner Upgrades related to interconnection of a Generation Project Developer and, when applicable as determined by Transmission Provider, of the Interconnection Facilities and Transmission Owner Upgrades related to interconnection of a Transmission Project Developer, shall occur in two stages. Stage One energization shall consist of energization of the Project Developer Interconnection Facilities and of the Transmission Owner Interconnection Facilities and Transmission Owner Upgrades and will occur prior to initial energization of the Generating Facility. Stage Two energization shall consist of (1) initial synchronization to the Transmission System of any completed generator(s) at the Generating Facility of a Generation Project Developer, or of applicable facilities, as determined by the Transmission Provider, associated with Merchant Transmission Facilities of a Transmission Project Developer, and (2) energization of the remainder of the Transmission Owner Interconnection Facilities and Transmission Owner Upgrades. Stage Two energization shall be completed prior to Initial Operation of the Generating Facility or Merchant Transmission Facility.

(B) In the case of Interconnection Facilities and Transmission Owner Upgrades related to interconnection of a Transmission Project Developer for which the Transmission Provider determines that two-stage energization is inapplicable, energization shall occur in a single stage, consisting of energization of the Interconnection Facilities and Transmission Owner Upgrades and the Generating Facility or Merchant Transmission Facility. Such a

single-stage energization shall be regarded as Stage Two energization for the purposes of the remaining provisions of this section 11.8.

11.8.1 Stage One energization of the Interconnection Facilities and Transmission Owner Upgrades may not occur prior to the satisfaction of the following additional conditions:

(a) The Project Developer shall have delivered to the Transmission Owner and Transmission Provider a writing transferring to the Transmission Owner and Transmission Provider operational control over any Transmission Owner Interconnection Facilities that Project Developer has constructed; and

(b) The Project Developer shall have provided a mark-up of construction drawings to the Transmission Owner to show the "as-built" condition of all Transmission Owner Interconnection Facilities and Stand Alone that Project Developer has constructed.

11.8.2 As soon as practicable after the satisfaction of the conditions for Stage One energization specified in sections 11.7 and 11.8.1 of this Schedule L, the Transmission Owner and the Project Developer shall coordinate and undertake the Stage One energization of facilities.

11.8.3 Stage Two energization of the Interconnection Facilities and Transmission Owner Upgrades may not occur prior to the satisfaction of the following additional conditions:

(a) The Project Developer shall have delivered to the Transmission Owner and Transmission Provider a writing transferring to the Transmission Owner and Transmission Provider operational control over any Transmission Owner Interconnection Facilities and Stand Alone Network Upgrades that Project Developer has constructed and operational control of which it has not previously transferred pursuant to section 11.8.1 of this Schedule L;

(b) The Project Developer shall have provided a mark-up of construction drawings to the Transmission Owner to show the "as-built" condition of all Transmission Owner Interconnection Facilities and Stand Alone Network Upgrades that Project Developer has constructed and which were not included in the Stage One energization, but are included in the Stage Two energization; and

(c) Telemetering systems shall be operational and shall be providing Transmission Provider and the Transmission Owner with telemetered data as specified pursuant to section 8.5.2 of Appendix 2 to this GIA.

11.8.4 As soon as practicable after the satisfaction of the conditions for Stage Two energization specified in sections 11.7 and 11.8.3 of this Schedule L, the

Transmission Owner and the Project Developer shall coordinate and undertake the Stage Two energization of facilities.

11.8.5 To the extent defects in any Interconnection Facilities and Transmission Owner Upgrades are identified during the energization process, the energization will not be deemed successful. In that event, the Constructing Entity shall take action to correct such defects in any Interconnection Facilities and Transmission Owner Upgrades that it built as promptly as practical after the defects are identified. The affected Constructing Entity shall so notify the other Construction Parties when it has corrected any such defects, and the Constructing Entities shall recommence efforts, within 10 days thereafter, to energize the appropriate Interconnection Facilities and Transmission Owner Upgrades in accordance with section 11.8 of this Schedule L; provided that the Transmission Owner may, in the reasonable exercise of its discretion and with the approval of Transmission Provider, require that further inspection and testing be performed in accordance with section 11.7 of this Schedule L.

11.9 Transmission Owner's Acceptance of Facilities Constructed by Project Developer:

Within five days after determining that Interconnection Facilities and Transmission Owner Upgrades have been successfully energized, the Transmission Owner shall issue a written notice to the Project Developer accepting the Interconnection Facilities and Transmission Owner Upgrades built by the Project Developer that were successfully energized. Such acceptance shall not be construed as confirming, endorsing or providing a warranty by the Transmission Owner as to the design, installation, construction, fitness, safety, durability or reliability of any Interconnection Facilities and Transmission Owner Upgrades built by the Project Developer, or their compliance with Applicable Standards.

11.10 Addendum of Non-Standard Terms and Conditions for Construction Service. In the event of any conflict between a provision of Schedule F of this GIA that FERC has accepted and any provision of the standard terms and conditions set forth in this Schedule L and Appendix 2 of this GIA that relates to the same subject matter, the pertinent provision of Schedule F of this GIA shall control.

SCHEDULE L, APPENDIX 1

NEGOTIATED CONTRACT OPTION TERMS

Not Required

ATTACHMENT B

Copy of Sheet Containing Original Signatures and Initialed Replacement Pages

DocuSign Envelope ID: 201FBD7A-BBE8-4385-B6E5-DD3E13B7D777

IN WITNESS WHEREOF, Transmission Provider, Project Developer and Transmission Owner have caused this GIA to be executed by their respective authorized officials.

(Project Identifier #AE2-139)

Transmission Provider: **PJM Interconnection, L.L.C.**

By: Susan L. McGill | Manager, Strategic Initiatives | May 8, 2024

Name | Title | Date

Printed name of signer: Susan L. McGill

Project Developer: **Bradford Solar LLC**

By: Juan Suarez | Vice President | Apr 19, 2024

Name | Title | Date

Printed name of signer: Juan Suarez

Transmission Owner: **Mid-Atlantic Interstate Transmission, LLC**

By: Gregory Hussing | Dir FERC & RTO Support | May 8, 2024

Name | Title | Date

Printed name of signer: Gregory Hussing

DocuSign Envelope ID: 9C1C6240-0F81-4F64-8DC9-6B1048921977

18.0 Notices. Any notice or request made by either party regarding this GIA shall be made, in accordance with the terms of Appendix 2 to this GIA, to the representatives of the other party and as applicable, to the Transmission Owner(s), as indicated below:

Transmission Provider:

PJM Interconnection, L.L.C.
2750 Monroe Blvd.
Audubon, PA 19403
interconnectionagreementnotices@pjm.com

Project Developer:

Bradford Solar LLC
c/o Vesper Energy
125 E John Carpenter Hwy, Suite 125
Irving, Texas 75062
Attn: Sonny Nguyen or successor, Transmission and Interconnection Director
Sonny.Nguyen@vesperenergy.com
(682) 478-8999

Transmission Owner:

Mid-Atlantic Interstate Transmission, LLC
76 South Main Street
A-GO-10
Akron, OH 44308
Attn: Michael Thorn, FERC & Wholesale Connection Support Manager, or successor
mthorn@firstenergycorp.com
(330) 384-3889

With copies to:

Interconnections Attorney
FirstEnergy Service Company
76 South Main Street
A-GO-15
Akron, OH 44308
aparker@firstenergycorp.com
(330) 384-4592

Legal Specialist
FirstEnergy Service Company
76 South Main Street
A-GO-15

SLM JS GH

May 31, 2024 Jun 3, 2024 May 31, 2024

DocuSign Envelope ID: 9C1C6240-0F81-4F64-8DC9-6B1048921977

V2

GIA REPLACEMENT PAGES

Section	Redlined GIA	Clean GIA
GIA, Specifications, section 4.0	. . . and in Appendix III~~2~~, section 9.0~~3.2.3.2~~ of the Construction Service Agreement . . .	. . . and in Appendix III, section 9.0 of the Construction Service Agreement . . .
GIA, Specifications, sections 4.1 through 4.7	4.1 Transmission Owner Interconnection Facilities Charge: $ 4.2 Network Upgrades Charge: $ 4.3 Option to Build Charges: $ ~~4.3~~4.4 Distribution Upgrades Charge: $ ~~4.4~~4.5 Other Charges: $ ~~4.5~~4.6 Cost breakdown: $Direct Labor $Direct Material $Indirect Labor $Indirect Material $Total ~~4.6~~4.7 Security Amount Breakdown: $ Estimated Cost of Network Upgrades, Distribution Upgrades, Transmission Owner Interconnection Facilities, and Other Charges Plus $ Option to Build Security for Transmission Owner Interconnection Facilities and Stand Alone Network Upgrades (including Cancellation Costs) $ Sum of Security required for costs listed in Specifications sections 4.1 through ~~4.4~~4.5 of this GIA	4.1 Transmission Owner Interconnection Facilities Charge: $ 4.2 Network Upgrades Charge: $ 4.3 Option to Build Charges $ 4.4 Distribution Upgrades Charge: $ 4.5 Other Charges: $ 4.6 Cost breakdown: $Direct Labor $Direct Material $Indirect Labor $Indirect Material $Total 4.7 Security Amount Breakdown: $ Estimated Cost of Network Upgrades, Distribution Upgrades, Transmission Owner Interconnection Facilities, and Other Charges Plus $ Option to Build Security for Transmission Owner Interconnection Facilities and Stand Alone Network Upgrades (including Cancellation Costs) $ Sum of Security required for costs listed in Specifications sections 4.1 through 4.5 of this GIA

SLM JS GH

May 31, 2024 Jun 3, 2024 May 31, 2024

DocuSign Envelope ID: 9C1C6240-0F81-4F64-8DC9-6B1048921977

GIA REPLACEMENT PAGES

Section	Redlined GIA	Clean GIA
All locations throughout the GIA	~~Customer Facility~~Generating Facility	Generating Facility
GIA, Schedule I	This Schedule I specifies information for Energy Storage Resource will be required to provide primary frequency response consistent with the conditions set forth in Appendix 2, sections 4.6~~7~~.2 (Primary Frequency Response), 4.6~~7~~.2.1 (Governor or Equivalent Controls), 4.6~~7~~.2.2 (Timely and Sustained Response), 4.6~~7~~.2.3 (Exemptions), and 4.6~~7~~.2.4 (Energy Storage Resources) of this GIA.	This Schedule I specifies information for Energy Storage Resource will be required to provide primary frequency response consistent with the conditions set forth in Appendix 2, sections 4.6.2 (Primary Frequency Response), 4.6.2.1 (Governor or Equivalent Controls), 4.6.2.2 (Timely and Sustained Response), 4.6.2.3 (Exemptions), and 4.6.2.4 (Energy Storage Resources) of this GIA.
GIA, Schedule L, Section 5.0(b)(3)	. . . ~~section 15.3~~section 11.2.3 of this Schedule L	. . . section 11.2.3 of this Schedule L
GIA, Schedule L, Section 8.0	. . . in accordance with ~~section 15.3~~section 11.3 of this Schedule L.	. . . in accordance with section 11.3 of this Schedule L.
GIA, Schedule L, Section 9.0	. . . to execute the responsibilities enumerated to Transmission Owner under ~~section 15~~section 11.2.3.	. . . to execute the responsibilities enumerated to Transmission Owner under section 11.2.3.
GIA, Schedule L, Section 10.1	. . . subject to the terms of ~~section 15.2.3~~section 11.2.3 of this Schedule L	. . . subject to the terms of section 11.2.3 of this Schedule L
GIA, Schedule L, Section 11.2.3.2(a)(vii)	. . . applicable to section ~~16~~14 of Appendix 2 of this GIA	. . . applicable to section 14 of Appendix 2 of this GIA
GIA, Schedule L, Section 11.4	. . . the Project Developer terminates its obligations under this GIA pursuant to Appendix 2, section 16.1.2~~.~~ of this GIA	. . . the Project Developer terminates its obligations under this GIA pursuant to Appendix 2, section 16.1.2 of this GIA
GIA, Schedule L, Section 11.7.4.1	Project Developer's indemnification obligations set forth in section 11.2.3.2~~(e)~~(a) of this Schedule L.	Project Developer's indemnification obligations set forth in section 11.2.3.2(a) of this Schedule L.
GIA, Schedule L, Section 11.8.4	. . . specified in sections 11.7 and ~~11.9.3~~11.8.3 of this Schedule L	. . . specified in sections 11.7 and 11.8.3 of this Schedule L
GIA, Schedule L, Section 11.8.5	. . . in accordance with section ~~11.9~~11.8 of this Schedule L; provided that the Transmission Owner may, in the reasonable exercise of its discretion and with the approval of Transmission Provider, require that further inspection and testing be performed in accordance with section 11.7 of this Schedule L.	. . . in accordance with section 11.8 of this Schedule L; provided that the Transmission Owner may, in the reasonable exercise of its discretion and with the approval of Transmission Provider, require that further inspection and testing be performed in accordance with section 11.7 of this Schedule L.
GIA, Appendix 1 "Schedule of Work"	"Schedule of Work" shall mean that Schedule of Work set forth in section 8.0 of Schedule L of a GIA, or Appendix I ~~Schedule~~ of a~~n ICSA~~CSA . . .	"Schedule of Work" shall mean that Schedule of Work set forth in section 8.0 of Schedule L of a GIA, or Appendix I of a CSA . . .

SLM JS GH

May 31, 2024 Jun 3, 2024 May 31, 2024

DocuSign Envelope ID: 9C1C6240-0F81-4F64-8DC9-6B1048921977

GIA REPLACEMENT PAGES

Section	Redlined GIA	Clean GIA
GIA, Appendix 1, "Network Upgrades"	. . .and identify them in the GIA, ~~Schedule L~~ Specifications, section 3.0 or in the ~~Interconnection~~ Construction Service Agreement, Schedule ~~D~~C.	. .and identify them in the GIA, Specifications, section 3.0 or in the Construction Service Agreement, Schedule C.

SLM JS GH

May 31, 2024 Jun 3, 2024 May 31, 2024

ATTACHMENT C

Redlined Pages Showing Schedule of Charges and Nonconforming Provisions

SCHEDULE E

SCHEDULE OF CHARGES

The Administration, Metering, Telemetering, and Operation and Maintenance ("O&M") charges referenced below refer to charges described in Section 10.1 of the Standard Terms and Conditions for Interconnections, which are contained in Appendix 2 of this GIA.

ADMINISTRATION CHARGES

The charges that MAIT would assess for Administration Charges would be its actual costs.

METERING CHARGES

The charges that MAIT would assess for Metering Charges would be its actual costs.

TELEMETERING CHARGES

The charges that MAIT would assess for Telemetering Charges would be its actual costs.

O&M CHARGES

MAIT reserves the right to charge its actual costs to the Project Developer for O&M expenses to maintain the Transmission Owner Interconnection Facilities.

GIA REPLACEMENT PAGES

Section	Redlined GIA	Clean GIA
GIA, Specifications, section 4.0	. . . and in Appendix III~~2~~, section 9.0~~3.2.3.2~~ of the Construction Service Agreement . . .	. . . and in Appendix III, section 9.0 of the Construction Service Agreement . . .
GIA, Specifications, sections 4.1 through 4.7	4.1 Transmission Owner Interconnection Facilities Charge: $ 4.2 Network Upgrades Charge: $ 4.3 Option to Build Charges: $ ~~4.3~~4.4 Distribution Upgrades Charge: $ ~~4.4~~4.5 Other Charges: $ ~~4.5~~4.6 Cost breakdown: $Direct Labor $Direct Material $Indirect Labor $Indirect Material $Total ~~4.6~~4.7 Security Amount Breakdown: $ Estimated Cost of Network Upgrades, Distribution Upgrades, Transmission Owner Interconnection Facilities, and Other Charges Plus $ Option to Build Security for Transmission Owner Interconnection Facilities and Stand Alone Network Upgrades (including Cancellation Costs) $ Sum of Security required for costs listed in Specifications sections 4.1 through ~~4.4~~4.5 of this GIA	4.1 Transmission Owner Interconnection Facilities Charge: $ 4.2 Network Upgrades Charge: $ 4.3 Option to Build Charges $ 4.4 Distribution Upgrades Charge: $ 4.5 Other Charges: $ 4.6 Cost breakdown: $Direct Labor $Direct Material $Indirect Labor $Indirect Material $Total 4.7 Security Amount Breakdown: $ Estimated Cost of Network Upgrades, Distribution Upgrades, Transmission Owner Interconnection Facilities, and Other Charges Plus $ Option to Build Security for Transmission Owner Interconnection Facilities and Stand Alone Network Upgrades (including Cancellation Costs) $ Sum of Security required for costs listed in Specifications sections 4.1 through 4.5 of this GIA

GIA REPLACEMENT PAGES

Section	Redlined GIA	Clean GIA
All locations throughout the GIA	~~Customer Facility~~Generating Facility	Generating Facility
GIA, Schedule I	This Schedule I specifies information for Energy Storage Resource will be required to provide primary frequency response consistent with the conditions set forth in Appendix 2, sections 4.6~~7~~.2 (Primary Frequency Response), 4.6~~7~~.2.1 (Governor or Equivalent Controls), 4.6~~7~~.2.2 (Timely and Sustained Response), 4.6~~7~~.2.3 (Exemptions), and 4.6~~7~~.2.4 (Energy Storage Resources) of this GIA.	This Schedule I specifies information for Energy Storage Resource will be required to provide primary frequency response consistent with the conditions set forth in Appendix 2, sections 4.6.2 (Primary Frequency Response), 4.6.2.1 (Governor or Equivalent Controls), 4.6.2.2 (Timely and Sustained Response), 4.6.2.3 (Exemptions), and 4.6.2.4 (Energy Storage Resources) of this GIA.
GIA, Schedule L, Section 5.0(b)(3)	. . . ~~section 15.3~~section 11.2.3 of this Schedule L	. . . section 11.2.3 of this Schedule L
GIA, Schedule L, Section 8.0	. . . in accordance with ~~section 15.3~~section 11.3 of this Schedule L.	. . . in accordance with section 11.3 of this Schedule L.
GIA, Schedule L, Section 9.0	. . . to execute the responsibilities enumerated to Transmission Owner under ~~section 15~~section 11.2.3.	. . . to execute the responsibilities enumerated to Transmission Owner under section 11.2.3.
GIA, Schedule L, Section 10.1	. . . subject to the terms of ~~section 15.2.3~~section 11.2.3 of this Schedule L	. . . subject to the terms of section 11.2.3 of this Schedule L
GIA, Schedule L, Section 11.2.3.2(a)(vii)	. . . applicable to section ~~16~~14 of Appendix 2 of this GIA	. . . applicable to section 14 of Appendix 2 of this GIA
GIA, Schedule L, Section 11.4	. . . the Project Developer terminates its obligations under this GIA pursuant to Appendix 2, section 16.1.2~~.~~ of this GIA	. . . the Project Developer terminates its obligations under this GIA pursuant to Appendix 2, section 16.1.2 of this GIA
GIA, Schedule L, Section 11.7.4.1	Project Developer's indemnification obligations set forth in section 11.2.3.2~~(e)~~(a) of this Schedule L.	Project Developer's indemnification obligations set forth in section 11.2.3.2(a) of this Schedule L.
GIA, Schedule L, Section 11.8.4	. . . specified in sections 11.7 and ~~11.9.3~~11.8.3 of this Schedule L	. . . specified in sections 11.7 and 11.8.3 of this Schedule L
GIA, Schedule L, Section 11.8.5	. . . in accordance with section ~~11.9~~11.8 of this Schedule L; provided that the Transmission Owner may, in the reasonable exercise of its discretion and with the approval of Transmission Provider, require that further inspection and testing be performed in accordance with section 11.7 of this Schedule L.	. . . in accordance with section 11.8 of this Schedule L; provided that the Transmission Owner may, in the reasonable exercise of its discretion and with the approval of Transmission Provider, require that further inspection and testing be performed in accordance with section 11.7 of this Schedule L.
GIA, Appendix 1 "Schedule of Work"	"Schedule of Work" shall mean that Schedule of Work set forth in section 8.0 of Schedule L of a GIA, or Appendix I ~~Schedule~~ of a~~n ICSA~~CSA . . .	"Schedule of Work" shall mean that Schedule of Work set forth in section 8.0 of Schedule L of a GIA, or Appendix I of a CSA . . .

GIA REPLACEMENT PAGES

Section	Redlined GIA	Clean GIA
GIA, Appendix 1, "Network Upgrades"	. . .and identify them in the GIA, ~~Schedule L~~ Specifications, section 3.0 or in the ~~Interconnection~~ Construction Service Agreement, Schedule ~~D~~C.	. .and identify them in the GIA, Specifications, section 3.0 or in the Construction Service Agreement, Schedule C.