PJM Interconnection, L.L.C.
2750 Monroe Boulevard
Audubon, PA 19403

October 8, 2026

The Honorable Debbie-Anne Reese, Secretary
Federal Energy Regulatory Commission
888 First Street, N.E., Room 1A
Washington, D.C. 20426-0001

Re: PJM Interconnection, L.L.C., Docket No. ER27-_77_-000

Amendment to Service Agreement No. 6237; Queue Position No. AE2-290

Dear Secretary Reese:

Pursuant to section 205 of the Federal Power Act[1] and part 35 of the rules and regulations of the Federal Energy Regulatory Commission ("FERC" or "Commission"),[2] PJM Interconnection, L.L.C. ("PJM") submits for filing an amended Interconnection Service Agreement ("Amended ISA"), among PJM, Nottingham Solar LLC ("Interconnection Customer"), and AEP Ohio Transmission Company, Inc. ("Interconnected Transmission Owner") (collectively, the "Parties") (the "Amended ISA"). The Amended ISA modifies Service Agreement No. 6237, filed with and accepted by the Commission in Docket No. ER23-2931-000, effective November 27, 2023 ("Original ISA").[3] Commission rules and regulations require that any change to the provisions of a service agreement on file with the Commission shall be filed as a change in rate.[4] Accordingly, PJM hereby submits the Amended ISA for filing.[5]

---

[1] 16 U.S.C. § 824d.

[2] 18 C.F.R. part 35.

[3] *See PJM Interconnection, L.L.C.*, Letter Order, Docket No. ER22-658-000 (Feb. 7, 2022); *PJM Interconnection, L.L.C.*, Letter Order, Docket No. ER23-2931-000 (Nov. 14, 2023).

[4] 18 C.F.R. § 35.1(c).

[5] A companion amended Interconnection Construction Service Agreement, which modifies Second Amended Service Agreement No. 6238, is not individually submitted to the Commission for filing, but rather reported in PJM's Electric Quarterly Reports ("EQR"). *See* Revised Public Utility Filing Requirements, Order No. 2001, 2001-2005 FERC Stats.

I. DESCRIPTION OF THE AMENDED ISA

The Amended ISA, designated as Service Agreement No. 6237, is substantively the same as the Original ISA, except the Amended ISA reflects (1) a modified sentence in section 1.0 (Parties) to explain that it is an amended ISA; (2) an extended milestone date in section 6.1 (Site permits) based on project suspension and schedule adjustments; (3) an extended milestone date in section 6.2 (Acquisition of Major Electrical Equipment) based on project suspension and schedule adjustments; (4) an extended milestone date in section 6.3 (Substantial Site work completed) based on project suspension and schedule adjustments; (5) an extended milestone date in section 6.4 (Delivery of major electrical equipment) based on project suspension and schedule adjustments; (6) an extended milestone date in section 6.5 (Commercial Operation) based on project suspension and schedule adjustments; (7) updated contact information in section 18.0 (Notices) for Interconnection Customer and Interconnected Transmission Owner; and (8) an updated description of the Customer Facility in Specifications, section 11.0(d).

The Parties effectuated the foregoing changes through the attached Agreement to Amend ("AA") signed by the Parties.[6] Except for the revisions specified above, all other terms and conditions of the Original ISA remain the same.

& Regs., Regs. Preambles ¶ 31,127 at P 249, *reh'g denied*, Order No. 2001-A, 100 FERC ¶ 61,074, *reconsideration and clarification denied*, Order No. 2001-B, 100 FERC ¶ 61,342, *enforcing*, Order No. 2001-C, 101 FERC ¶ 61,314 (2002), *enforcing*, Order No. 2001-D, 102 FERC ¶ 61,334, *order on clarification*, Order No. 2001-E, 105 FERC ¶ 61,352 (2003), *order on clarification*, Order No. 2001-F, 106 FERC ¶ 61,060 (2004), *order adopting EQR data dictionary*, Order No. 2001-G, 120 FERC ¶ 61,270, *order on reh'g and clarification*, Order No. 2001-H, 121 FERC ¶ 61,289 (2007), *order revising EQR data dictionary*, Order No. 2001-I, III FERC Stats. & Regs., Regs. Preambles ¶ 31,282 (2008).

[6] The executed AA is attached to this transmittal letter as Attachment C.

II. REQUESTED EFFECTIVE DATE

PJM requests an effective date of December 8, 2026, for the Amended ISA. The requested effective date is sixty-one (61) days after this submission of the Amended ISA, and thus meets the Commission's notice requirement.[7]

III. DOCUMENTS ENCLOSED

In addition to this transmittal letter, PJM encloses the following:

1. Attachment A: Amended ISA, Service Agreement No. 6237 (Marked Tariff);
2. Attachment B: Amended ISA, Service Agreement Nos. 6237 (Clean Tariff); and
3. Attachment C: Executed Agreement to Amend.

[7] 18 C.F.R. § 35.3(a).

IV. CORRESPONDENCE AND COMMUNICATIONS

All notices, correspondence, and communications addressed to PJM regarding this matter should be directed to, and PJM requests that the Secretary includes on the Commission's official service list,[8] the following:

Christopher B. Holt
Managing Counsel
PJM Interconnection, L.L.C.
2750 Monroe Boulevard
Audubon, PA 19403-2497
(267) 885-6749
Chrisopher.Holt@pjm.com

Jeffrey M. Gray
Gray PLLC
P.O. Box 620323
Middleton, WI 53562-0323
(608) 628-3800
Jeffrey.Gray@pjm.com

Craig Glazer
Vice President–Federal Government Policy
PJM Interconnection, L.L.C.
1200 G Street, N.W, Suite 600
Washington, D.C. 20005
(202) 423-4743
Craig.Glazer@pjm.com

V. SERVICE

PJM has served a copy of this filing on Interconnection Customer, Interconnected Transmission Owner, and the relevant state utility regulatory commissions within the PJM Region.

[8] PJM requests waiver of Rule 203(b)(3) of the Commission's Rules of Practice and Procedure, 18 C.F.R. § 385.203(b)(3), to permit all the persons listed to be placed on the official service list for this proceeding.

VI. CONCLUSION

For the reasons set forth in this transmittal, PJM respectfully requests the Commission to accept the Amended ISA effective as of December 8, 2026.

Respectfully submitted,

By: /s/ *Jeffrey M. Gray*

Christopher B. Holt
Managing Counsel
PJM Interconnection, L.L.C.
2750 Monroe Boulevard
Audubon, PA 19403-2497
(267) 885-6749
Christopher.Holt@pjm.com

Jeffrey M. Gray
Gray PLLC
P.O. Box 620323
Middleton, WI 53562-0323
(608) 628-3800
Jeffrey.Gray@pjm.com

Counsel for
PJM Interconnection, L.L.C.

Craig Glazer
Vice President–Federal Government Policy
PJM Interconnection, L.L.C.
1200 G Street, N.W, Suite 600
Washington, D.C. 20005
(202) 423-4743
Craig.Glazer@pjm.com

cc (via email):

Interconnection Customer
Wylie Levone - wylie.levone@energixrenewables.com
Harshal Devani - harshal.devani@energixrenewables.com
Notices-US@EnergixRenewables.com
Legal-US@EnergixRenewables.com

Interconnected Transmission Owner
Evan Wilcox - pjmrequest@aep.com
legalnoticesinterconnections@aep.com

All state utility regulatory commissions within the PJM Region

ATTACHMENT A

Amended ISA, Service Agreement No. 6237
(Marked Tariff)

(PJM Queue #AE2-290)

INTERCONNECTION SERVICE AGREEMENT
Among
PJM INTERCONNECTION, L.L.C.
And
NOTTINGHAM SOLAR LLC
And
AEP OHIO TRANSMISSION COMPANY, INC.

INTERCONNECTION SERVICE AGREEMENT
By and Among
PJM Interconnection, L.L.C.
And
Nottingham Solar LLC
And
AEP Ohio Transmission Company, Inc.
(PJM Queue Position #AE2-290)

1.0 Parties. This Interconnection Service Agreement ("ISA") including the Specifications, Schedules and Appendices attached hereto and incorporated herein, is entered into by and between PJM Interconnection, L.L.C., the Regional Transmission Organization for the PJM Region (hereinafter "Transmission Provider" or "PJM"), Nottingham Solar LLC ("Interconnection Customer") and AEP Ohio Transmission Company, Inc. ("Interconnected Transmission Owner" or "AEP"). All capitalized terms herein shall have the meanings set forth in the appended definitions of such terms as stated in Part I of the PJM Open Access Transmission Tariff ("Tariff"). This ISA amends the Interconnection Service Agreement among the Parties, Service Agreement No. 6237, effective November 15, 2021, filed with and accepted by the Federal Energy Regulatory Commission in Docket No. ER22-658-000, as amended in Docket No. ER23-2931-000, effective November 27, 2023.

2.0 Authority. This ISA is entered into pursuant to Part VI of the Tariff. Interconnection Customer has requested an Interconnection Service Agreement under the Tariff, and Transmission Provider has determined that Interconnection Customer is eligible under the Tariff to obtain this ISA. The standard terms and conditions for interconnection as set forth in Appendix 2 to this ISA are hereby specifically incorporated as provisions of this ISA. Transmission Provider, Interconnected Transmission Owner and Interconnection Customer agree to and assume all of the rights and obligations of the Transmission Provider, Interconnected Transmission Owner and Interconnection Customer, respectively, as set forth in Appendix 2 to this ISA.

3.0 Customer Facility Specifications. Attached are Specifications for the Customer Facility that Interconnection Customer proposes to interconnect with the Transmission System. Interconnection Customer represents and warrants that, upon completion of construction of such facilities, it will own or control the Customer Facility identified in section 1.0 of the Specifications attached hereto and made a part hereof. In the event that Interconnection Customer will not own the Customer Facility, Interconnection Customer represents and warrants that it is authorized by the owner(s) thereof to enter into this ISA and to represent such control.

4.0 Effective Date. Subject to any necessary regulatory acceptance, this ISA shall become effective on the date it is executed by all Interconnection Parties, or, if the agreement is filed with FERC unexecuted, upon the date specified by FERC. This ISA shall terminate

on such date as mutually agreed upon by the parties, unless earlier terminated in accordance with the terms set forth in Appendix 2 to this ISA. The term of the ISA shall be as provided in Section 1.3 of Appendix 2 to this ISA. Interconnection Service shall commence as provided in Section 1.2 of Appendix 2 to this ISA.

5.0 Security. In accord with Section 212.4 of the Tariff, Interconnection Customer shall provide the Transmission Provider (for the benefit of the Interconnected Transmission Owner) with a letter of credit from an agreed provider or other form of security reasonably acceptable to the Transmission Provider and that names the Transmission Provider as beneficiary ("Security") in the amount of $557,327. This amount represents the sum of the estimated Costs, determined in accordance with Sections 212 and 217 of the Tariff, for which the Interconnection Customer will be responsible, less any Costs already paid by Interconnection Customer. Interconnection Customer acknowledges that its ultimate cost responsibility in accordance with Section 217 of the Tariff will be based upon the actual Costs of the facilities described in the Specifications, whether greater or lesser than the amount of the payment security provided under this section.

For any portion of the security that may be deferred in accordance with Section 212.4(c) of the Tariff, and as requested by Interconnection Customer, Interconnection Customer shall provide the security specified in this Section 5.0 within 120 days after the Interconnection Customer executes this ISA, provided that Interconnection Customer shall pay a deposit of at least $200,000 or 125% of the estimated costs that will be incurred during the 120-day period, whichever is greater, to fund continued design work and/or procurement activities, with $100,000 of such deposit being non-refundable.

Should Interconnection Customer fail to provide security at the time the Interconnection Customer executes this ISA, or, if deferred, by the end of the 120-day period, this ISA shall be terminated.

6.0 Project Specific Milestones. In addition to the milestones stated in Section 212.5 of the Tariff, as applicable, during the term of this ISA, Interconnection Customer shall ensure that it meets each of the following development milestones:

6.1 Site permits. On or before October 17, 2025~~January 31, 2023~~, Interconnection Customer must demonstrate that it has obtained any necessary local, county, and state site permits.

6.2 Acquisition of major electrical equipment. On or before July 1, 2025~~October 15, 2022~~, Interconnection Customer must demonstrate that it has signed a memorandum of understanding for the acquisition of major equipment.

6.3 Substantial Site work completed. On or before March 16, 2026~~June 30, 2023~~, Interconnection Customer must demonstrate completion of at least 20% of project site construction. At this time, Interconnection Customer must submit to Interconnected Transmission Owner and Transmission Provider initial drawings, certified by a professional engineer, of the Customer Interconnection Facilities.

6.4 Delivery of major electrical equipment. On or before June 16, 2026~~September 30, 2023~~, Interconnection Customer must demonstrate that all generating units have been delivered to Interconnection Customer's project site.

~~6.5~~

6.5 Commercial Operation. On or before December 15, 2026, Interconnection Customer must demonstrate commercial operation of all generating units. ~~(i) On or before December 15, 2023, Interconnection Customer must demonstrate commercial operation of sixteen (16) generating units. (ii) On or before December 31, 2023, Interconnection Customer must demonstrate commercial operation of sixteen (16) generating units.~~ Demonstrating commercial operation includes achieving Initial Operation in accordance with Section 1.4 of Appendix 2 to this ISA and making commercial sales or use of energy, as well as, if applicable, obtaining capacity qualification in accordance with the requirements of the Reliability Assurance Agreement Among Load Serving Entities in the PJM Region.

6.6 Within one (1) month following commercial operation of generating unit(s), Interconnection Customer must provide certified documentation demonstrating that "as-built" Customer Facility and Customer Interconnection Facilities are in accordance with applicable PJM studies and agreements. Interconnection Customer must also provide PJM with "as-built" electrical modeling data or confirm that previously submitted data remains valid.

Interconnection Customer shall demonstrate the occurrence of each of the foregoing milestones to Transmission Provider's reasonable satisfaction. Transmission Provider may reasonably extend any such milestone dates, in the event of delays that Interconnection Customer (i) did not cause and (ii) could not have remedied through the exercise of due diligence. The milestone dates stated in this ISA shall be deemed to be extended coextensively with any suspension of work initiated by Interconnection Customer in accordance with the Interconnection Construction Service Agreement.

7.0 Provision of Interconnection Service. Transmission Provider and Interconnected Transmission Owner agree to provide for the interconnection to the Transmission System in the PJM Region of Interconnection Customer's Customer Facility identified in the Specifications in accordance with Part IV and Part VI of the Tariff, the Operating Agreement of PJM Interconnection, L.L.C. ("Operating Agreement"), and this ISA, as they may be amended from time to time.

8.0 Assumption of Tariff Obligations. Interconnection Customer agrees to abide by all rules and procedures pertaining to generation and transmission in the PJM Region, including but not limited to the rules and procedures concerning the dispatch of generation or scheduling transmission set forth in the Tariff, the Operating Agreement and the PJM Manuals.

9.0 Facilities Study. In analyzing and preparing the Facilities Study, and in designing and constructing the Attachment Facilities, Local Upgrades and/or Network Upgrades

described in the Specifications attached to this ISA, Transmission Provider, the Interconnected Transmission Owner(s), and any other subcontractors employed by Transmission Provider have had to, and shall have to, rely on information provided by Interconnection Customer and possibly by third parties and may not have control over the accuracy of such information. Accordingly, NEITHER TRANSMISSION PROVIDER, THE INTERCONNECTED TRANSMISSION OWNER(s), NOR ANY OTHER SUBCONTRACTORS EMPLOYED BY TRANSMISSION PROVIDER OR INTERCONNECTED TRANSMISSION OWNER MAKES ANY WARRANTIES, EXPRESS OR IMPLIED, WHETHER ARISING BY OPERATION OF LAW, COURSE OF PERFORMANCE OR DEALING, CUSTOM, USAGE IN THE TRADE OR PROFESSION, OR OTHERWISE, INCLUDING WITHOUT LIMITATION IMPLIED WARRANTIES OF MERCHANTABILITY AND FITNESS FOR A PARTICULAR PURPOSE, WITH REGARD TO THE ACCURACY, CONTENT, OR CONCLUSIONS OF THE FACILITIES STUDY OR THE SYSTEM IMPACT STUDY IF A FACILITIES STUDY WAS NOT REQUIRED OR OF THE ATTACHMENT FACILITIES, THE LOCAL UPGRADES AND/OR THE NETWORK UPGRADES, PROVIDED, HOWEVER, that Transmission Provider warrants that the Transmission Owner Interconnection Facilities and any Merchant Transmission Upgrades described in the Specifications will be designed and constructed (to the extent that Interconnected Transmission Owner is responsible for design and construction thereof) and operated in accordance with Good Utility Practice, as such term is defined in the Operating Agreement. Interconnection Customer acknowledges that it has not relied on any representations or warranties not specifically set forth herein and that no such representations or warranties have formed the basis of its bargain hereunder.

10.0 Construction of Transmission Owner Interconnection Facilities

10.1. Cost Responsibility. Interconnection Customer shall be responsible for and shall pay upon demand all Costs associated with the interconnection of the Customer Facility as specified in the Tariff. These Costs may include, but are not limited to, an Attachment Facilities charge, a Local Upgrades charge, a Network Upgrades charge and other charges. A description of the facilities required and an estimate of the Costs of these facilities are included in Sections 3.0 and 4.0 of the Specifications to this ISA.

10.2. Billing and Payments. Transmission Provider shall bill the Interconnection Customer for the Costs associated with the facilities contemplated by this ISA, estimates of which are set forth in the Specifications to this ISA, and the Interconnection Customer shall pay such Costs, in accordance with Section 11 of Appendix 2 to this ISA and the applicable Interconnection Construction Service Agreement. Upon receipt of each of Interconnection Customer's payments of such bills, Transmission Provider shall reimburse the applicable Interconnected Transmission Owner. Pursuant to Section 212.4 of the Tariff, Interconnection Customer requests that Transmission Provider provide a quarterly cost reconciliation:

___X___ Yes

_____ No

10.3. Contract Option. In the event that the Interconnection Customer and Interconnected Transmission Owner agree to utilize the Negotiated Contract Option provided by the Interconnection Construction Service Agreement to establish, subject to FERC acceptance, non-standard terms regarding cost responsibility, payment, billing and/or financing, the terms of Sections 10.1 and/or 10.2 of this Section 10.0 shall be superseded to the extent required to conform to such negotiated terms, as stated in a schedule attached to the parties' Interconnection Construction Service Agreement relating to interconnection of the Customer Facility.

10.4 In the event that the Interconnection Customer elects to construct some or all of the Transmission Owner Interconnection Facilities under the Option to Build of the Interconnection Construction Service Agreement, billing and payment for the Costs associated with the facilities contemplated by this ISA shall relate only to such portion of the Interconnection Facilities as the Interconnected Transmission Owner is responsible for building.

11.0 Interconnection Specifications

11.1 Point of Interconnection. The Point of Interconnection shall be as identified on the one-line diagram attached as Schedule B to this ISA.

11.2 List and Ownership of Interconnection Facilities. The Interconnection Facilities to be constructed and ownership of the components thereof are identified in Section 3.0 of the Specifications attached to this ISA.

11.3 Ownership and Location of Metering Equipment. The Metering Equipment to be constructed, the capability of the Metering Equipment to be constructed, and the ownership thereof, are identified on the attached Schedule C to this ISA.

11.4 Applicable Technical Standards. The Applicable Technical Requirements and Standards that apply to the Customer Facility and the Interconnection Facilities are identified in Schedule D to this ISA.

12.0 Power Factor Requirement.

Consistent with Section 4.7 of Appendix 2 to this ISA, the power factor requirement is as follows:

The Generation Interconnection Customer shall design its non-synchronous Customer Facility with the ability to maintain a power factor of at least 0.95 leading to 0.95 lagging measured at the high side of the facility substation transformers.

13.0 Charges. In accordance with Sections 10 and 11 of Appendix 2 to this ISA, the Interconnection Customer shall pay to the Transmission Provider the charges applicable after Initial Operation, as set forth in Schedule E to this ISA. Promptly after receipt of such payments, the Transmission Provider shall forward such payments to the appropriate Interconnected Transmission Owner.

14.0 Third Party Beneficiaries. No third party beneficiary rights are created under this ISA, except, however, that, subject to modification of the payment terms stated in Section 10 of this ISA pursuant to the Negotiated Contract Option, payment obligations imposed on Interconnection Customer under this ISA are agreed and acknowledged to be for the benefit of the Interconnected Transmission Owner(s). Interconnection Customer expressly agrees that the Interconnected Transmission Owner(s) shall be entitled to take such legal recourse as it deems appropriate against Interconnection Customer for the payment of any Costs or charges authorized under this ISA or the Tariff with respect to Interconnection Service for which Interconnection Customer fails, in whole or in part, to pay as provided in this ISA, the Tariff and/or the Operating Agreement.

15.0 Waiver. No waiver by either party of one or more defaults by the other in performance of any of the provisions of this ISA shall operate or be construed as a waiver of any other or further default or defaults, whether of a like or different character.

16.0 Amendment. This ISA or any part thereof, may not be amended, modified, or waived other than by a written document signed by all parties hereto.

17.0 Construction With Other Parts Of The Tariff. This ISA shall not be construed as an application for service under Part II or Part III of the Tariff.

18.0 Notices. Any notice or request made by either party regarding this ISA shall be made, in accordance with the terms of Appendix 2 to this ISA, to the representatives of the other party and as applicable, to the Interconnected Transmission Owner(s), as indicated below:

Transmission Provider:

PJM Interconnection, L.L.C.
2750 Monroe Blvd.
Audubon, PA 19403

Interconnection Customer:

Nottingham Solar LLC
c/o Energix Renewables
1201 Wilson Blvd., Suite 2200~~400 Market Industrial Park, Suite 32~~

Arlington, VA 22209~~Wappinger Falls, NY 12590~~

Attn: Nottingham Development Team
Wylie Levone - wylie.levone@energixrenewables.com
Harshal Devani - harshal.devani@energixrenewables.com
Notices-US@EnergixRenewables.com
Legal-US@EnergixRenewables.com
703-373-7309~~alicia.scott@bqenergy.com~~

Interconnected Transmission Owner:

Interconnection Services~~Robert Pennybaker, Director – System Interconnections~~

American Electric Power Service Corporation
1 Riverside Plaza~~212 E 6th St. 4th Floor~~

Columbus, OH 43215~~Tulsa, OK 74119~~

Attn: Evan Wilcox - Managing Director, or successor
Email: pjmrequest@aep.com
Phone: 614-716-1000

With copies to:

Assistant General Counsel – Transactions
American Electric Power Service Corporation
1 Riverside Plaza
Columbus, OH 43215
Email: legalnoticesinterconnections@aep.com~~rlpennybaker@aep.com~~

~~Cc: John W. Seidensticker, Senior Counsel~~
~~American Electric Power Service Corporation~~
~~1 Riverside Plaza – 29th Floor~~
~~Columbus, OH 43215~~
~~jwseidensticker@aep.com~~

19.0 Incorporation Of Other Documents. All portions of the Tariff and the Operating Agreement pertinent to the subject matter of this ISA and not otherwise made a part hereof are hereby incorporated herein and made a part hereof.

20.0 Addendum of Non-Standard Terms and Conditions for Interconnection Service. Subject to FERC approval, the parties agree that the terms and conditions set forth in Schedule F hereto are hereby incorporated herein by reference and be made a part of this ISA. In the event of any conflict between a provision of Schedule F that FERC has accepted and any provision of Appendix 2 to this ISA that relates to the same subject matter, the pertinent provision of Schedule F shall control.

21.0 Addendum of Interconnection Customer's Agreement to Conform with IRS Safe Harbor Provisions for Non-Taxable Status. To the extent required, in accordance with Section 24.1 of Appendix 2 to this ISA, Schedule G to this ISA shall set forth the Interconnection Customer's agreement to conform with the IRS safe harbor provisions for non-taxable status.

22.0 Addendum of Interconnection Requirements for all Wind or Non-synchronous Generation Facilities. To the extent required, Schedule H to this ISA sets forth interconnection requirements for a wind or non-synchronous generation facilities and is hereby incorporated by reference and made a part of this ISA.

23.0 All interconnection parties agree to comply with all infrastructure security requirements of the North American Electric Reliability Corporation.

IN WITNESS WHEREOF, Transmission Provider, Interconnection Customer and Interconnected Transmission Owner have caused this ISA to be executed by their respective authorized officials.

(PJM Queue Position #AE2-290)

Transmission Provider: **PJM Interconnection, L.L.C.**

By: _____ _____ _____
Name Title Date

Printed name of signer: _____

Interconnection Customer: **Nottingham Solar LLC**

By: _____ _____ _____
Name Title Date

Printed name of signer: _____

Interconnected Transmission Owner: **AEP Ohio Transmission Company, Inc.**

By: _____ _____ _____
Name Title Date

Printed name of signer: _____

All signature lines intentionally left blank. See Agreement to Amend executed by the parties on ~~August 28, 2023~~September 23, 2026.

SPECIFICATIONS FOR
INTERCONNECTION SERVICE AGREEMENT
By and Among
PJM INTERCONNECTION, L.L.C.
And
Nottingham Solar LLC
And
AEP Ohio Transmission Company, Inc.
(PJM Queue Position # AE2-290)

1.0 Description of generating unit(s) (the Customer Facility) to be interconnected with the Transmission System in the PJM Region:

a. Name of Customer Facility:

Nottingham Solar

b. Location of Customer Facility:

Harrison County, Ohio
GPS Coordinates: 40.189455, -81.041113

c. Size in megawatts of Customer Facility:

For Generation Interconnection Customer:

Maximum Facility Output of 100 MW

d. Description of the equipment configuration:

A solar Generating Facility consisting of 32 x 3.51 MW HEM FS3510M inverters, solar panels supporting 100 MWE. The Generating Facility will also include circuit breakers and/or switches required for the Generating Facility, protection and control relays and any associated enclosure and 1 x 75/105/125 MVA main power transformer with a high-side voltage of 138 kV.~~100 MWac solar photovoltaic facility.~~

2.0 Rights

2.1 Capacity Interconnection Rights:

Pursuant to and subject to the applicable terms of the Tariff, the Interconnection Customer shall have Capacity Interconnection Rights at the Point(s) of Interconnection specified in this Interconnection Service Agreement in the amount of 60 MW.

2.1a To the extent that any portion of the Customer Facility described in section 1.0 is not a Capacity Resource with Capacity Interconnection Rights, such portion of the Customer Facility shall be an Energy Resource. PJM reserves the right to limit total injections to the Maximum Facility Output in the event reliability would be affected by output greater than such quantity.

2.3 Incremental Deliverability Rights:

Pursuant to Section 235 of the Tariff, Interconnection Customer shall have Incremental Deliverability Rights at each indicated Point of Interconnection in the following quantity(ies): None

2.4 Incremental Available Transfer Capability Revenue Rights:

Pursuant to Section 233 of the Tariff, Interconnection Customer shall have Incremental Available Transfer Capability Revenue Rights at each indicated Point of Interconnection in the following quantities: None

2.5 Incremental Auction Revenue Rights:

Pursuant to Section 231 of the Tariff, Interconnection Customer shall have Incremental Auction Revenue Rights in the following quantities: None

2.6 Incremental Capacity Transfer Rights:

Pursuant to Section 234 of the Tariff, Interconnection Customer shall have Incremental Capacity Transfer Rights between the following associated source(s) and sink(s) in the indicated quantities: None

3.0 Construction Responsibility and Ownership of Interconnection Facilities

a. Interconnection Customer.

(1) Interconnection Customer shall construct and, unless otherwise indicated, shall own, the following Interconnection Facilities:

- One (1) 138/34.5 kV grounded wye / grounded wye main step-up transformer;
- One (1) 138 kV circuit breaker;
- 138 kV generator lead transmission line from the step-up transformer to the Point of Interconnection;
- Fiber-optic cable from the Point of Interconnection to the generator collector station;

- Relay and protective equipment, supervisory control and data acquisition (SCADA) equipment, fiber-optic equipment, and telecommunications equipment; and

- Necessary metering equipment as specified in Schedule C of this ISA.

(2) In the event that, in accordance with the Interconnection Construction Service Agreement, Interconnection Customer has exercised the Option to Build, it is hereby permitted to build in accordance with and subject to the conditions and limitations set forth in that Section, the following portions of the Transmission Owner Interconnection Facilities which constitute or are part of the Customer Facility:

None

Ownership of the facilities built by Interconnection Customer pursuant to the Option to Build shall be as provided in the Interconnection Construction Service Agreement.

b. Interconnected Transmission Owner

Attachment Facilities:

- Construct one (1) 138 kV generator lead transmission line span from the Nottingham 138 kV Station to the Point of Interconnection, including the first structure outside the Nottingham 138 kV Station, install 138 kV revenue meter, and extend dual fiber-optic from the Point of Interconnection to the Nottingham 138 kV Station control house. **(PJM Network Upgrade n7452)**

Non-Direct Connection Network Upgrades:

- Expand Nottingham 138 kV Station, including the addition of two (2) 138 kV circuit breakers, installation of associated protection and control equipment, 138 kV line risers, and supervisory control and data acquisition (SCADA) equipment. (**PJM Network Upgrade n7453**)

4.0 Subject to modification pursuant to the Negotiated Contract Option and/or the Option to Build under the Interconnection Construction Service Agreement, Interconnection Customer shall be subject to the estimated charges detailed below, which shall be billed and paid in accordance with Appendix 2, Section 11 of this ISA and the applicable Interconnection Construction Service Agreement.

4.1 Attachment Facilities Charge: $1,783,043.00

4.2 Network Upgrades Charge: $2,882,021.00

4.3 Local Upgrades Charge: $0

4.4 Other Charges: $0

4.5 Cost breakdown:

$2,187,038.00	Direct Labor
$1,829,699.00	Direct Material
$648,327.00	Indirect Labor
$0	Indirect Material
$4,665,064.00	Total

4.6 Security Amount Breakdown:

$2,882,021.00 Estimated Cost of Non-Direct Connection Local Upgrades and/or Non-Direct Connection Network Upgrades

plus $207,273.00 Estimated cost of the work (for the first three months after construction commences in earnest) on the required Attachment Facilities, Direct Connection Local Upgrades, and Direct Connection Network Upgrades

plus $0 Option to Build Security for Transmission Owner Attachment Facilities and Direct Connection Network Upgrades (including Cancellation Costs)

$3,089,294.00 Total Security required with ISA

less $0 Costs already paid by Interconnection Customer

$3,089,294.00 Total Security required with ISA

APPENDICES:

- **APPENDIX 1 - DEFINITIONS**
- **APPENDIX 2 - STANDARD TERMS AND CONDITIONS FOR INTERCONNECTIONS**

SCHEDULES:

- **SCHEDULE A - CUSTOMER FACILITY LOCATION/SITE PLAN**
- **SCHEDULE B - SINGLE-LINE DIAGRAM**
- **SCHEDULE C - LIST OF METERING EQUIPMENT**
- **SCHEDULE D - APPLICABLE TECHNICAL REQUIREMENTS AND STANDARDS**
- **SCHEDULE E - SCHEDULE OF CHARGES**
- **SCHEDULE F - SCHEDULE OF NON-STANDARD TERMS & CONDITIONS**
- **SCHEDULE G - INTERCONNECTION CUSTOMER'S AGREEMENT TO CONFORM WITH IRS SAFE HARBOR PROVISIONS FOR NON-TAXABLE STATUS**
- **SCHEDULE H - INTERCONNECTION REQUIREMENTS FOR A WIND GENERATION FACILITY**
- **SCHEDULE I – INTERCONNECTION SPECIFICATIONS FOR AN ENERGY STORAGE RESOURCE**
- **SCHEDULE J – SCHEDULE OF TERMS AND CONDITIONS FOR SURPLUS INTERCONNECTION SERVICE**
- **SCHEDULE K – REQUIREMENTS FOR INTERCONNECTION SERVICE BELOW FULL ELECTRICAL GENERATING CAPABILITY**

APPENDIX 1

DEFINITIONS

From the PJM Tariff accepted for filing by the Commission as of the effective date of this agreement

Unless the context otherwise specifies or requires, capitalized terms used in this Agreement shall have the respective meanings set forth below. Unless otherwise specified, all references herein to sections, Schedules or Appendices are to sections, Schedules or Appendices of this Agreement.

Abnormal Condition:

"Abnormal Condition" shall mean any condition on the Interconnection Facilities which, determined in accordance with Good Utility Practice, is: (i) outside normal operating parameters such that facilities are operating outside their normal ratings or that reasonable operating limits have been exceeded; and (ii) could reasonably be expected to materially and adversely affect the safe and reliable operation of the Interconnection Facilities; but which, in any case, could reasonably be expected to result in an Emergency Condition. Any condition or situation that results from lack of sufficient generating capacity to meet load requirements or that results solely from economic conditions shall not, standing alone, constitute an Abnormal Condition.

Affected System:

"Affected System" shall mean an electric system other than the Transmission Provider's Transmission System that may be affected by a proposed interconnection or on which a proposed interconnection or addition of facilities or upgrades may require modifications or upgrades to the Transmission System.

Affiliate:

"Affiliate" shall mean any two or more entities, one of which Controls the other or that are under common Control. "Control," as that term is used in this definition, shall mean the possession, directly or indirectly, of the power to direct the management or policies of an entity. Ownership of publicly-traded equity securities of another entity shall not result in Control or affiliation for purposes of the Tariff or Operating Agreement if the securities are held as an investment, the holder owns (in its name or via intermediaries) less than 10 percent (10%) of the outstanding securities of the entity, the holder does not have representation on the entity's board of directors (or equivalent managing entity) or vice versa, and the holder does not in fact exercise influence over day-to-day management decisions. Unless the contrary is demonstrated to the satisfaction of the Members Committee, Control shall be presumed to arise from the ownership of or the power to vote, directly or indirectly, ten percent or more of the voting securities of such entity.

Ancillary Services:

"Ancillary Services" shall mean those services that are necessary to support the transmission of capacity and energy from resources to loads while maintaining reliable operation of the Transmission Provider's Transmission System in accordance with Good Utility Practice.

Applicable Laws and Regulations:

"Applicable Laws and Regulations" shall mean all duly promulgated applicable federal, State

and local laws, regulations, rules, ordinances, codes, decrees, judgments, directives, or judicial or administrative orders, permits and other duly authorized actions of any Governmental Authority having jurisdiction over the relevant parties, their respective facilities, and/or the respective services they provide.

Applicable Regional Entity:

"Applicable Regional Entity" shall mean the Regional Entity for the region in which a Network Customer, Transmission Customer, New Service Customer, or Transmission Owner operates.

Applicable Standards:

"Applicable Standards" shall mean the requirements and guidelines of NERC, the Applicable Regional Entity, and the Control Area in which the Customer Facility is electrically located; the PJM Manuals; and Applicable Technical Requirements and Standards.

Applicable Technical Requirements and Standards:

"Applicable Technical Requirements and Standards" shall mean those certain technical requirements and standards applicable to interconnections of generation and/or transmission facilities with the facilities of an Interconnected Transmission Owner or, as the case may be and to the extent applicable, of an Electric Distributor, as published by Transmission Provider in a PJM Manual provided, however, that, with respect to any generation facilities with maximum generating capacity of 2 MW or less *(synchronous) or 5 MW or less (inverter-based)* for which the Interconnection Customer executes a Construction Service Agreement or Interconnection Service Agreement on or after March 19, 2005, "Applicable Technical Requirements and Standards" shall refer to the "PJM Small Generator Interconnection Applicable Technical Requirements and Standards." All Applicable Technical Requirements and Standards shall be publicly available through postings on Transmission Provider's internet website.

Attachment Facilities:

"Attachment Facilities" shall mean the facilities necessary to physically connect a Customer Facility to the Transmission System or interconnected distribution facilities.

Behind The Meter Generation:

"Behind The Meter Generation" shall refer to a generation unit that delivers energy to load without using the Transmission System or any distribution facilities (unless the entity that owns or leases the distribution facilities has consented to such use of the distribution facilities and such consent has been demonstrated to the satisfaction of the Office of the Interconnection); provided, however, that Behind The Meter Generation does not include (i) at any time, any portion of such generating unit's capacity that is designated as a Generation Capacity Resource; or (ii) in an hour, any portion of the output of such generating unit that is sold to another entity for consumption at another electrical location or into the PJM Interchange Energy Market.

Breach:

"Breach" shall mean the failure of a party to perform or observe any material term or condition of Tariff, Part IV or Tariff, Part VI, or any agreement entered into thereunder as described in the relevant provisions of such agreement.

Breaching Party:

"Breaching Party" shall mean a party that is in Breach of Tariff, Part IV or Tariff, Part VI and/or an agreement entered into thereunder.

Business Day:

"Business Day" shall mean a day in which the Federal Reserve System is open for business and is not a scheduled PJM holiday.

Cancellation Costs:

"Cancellation Costs" shall mean costs and liabilities incurred in connection with: (a) cancellation of supplier and contractor written orders and agreements entered into to design, construct and install Attachment Facilities, Direct Assignment Facilities and/or Customer-Funded Upgrades, and/or (b) completion of some or all of the required Attachment Facilities, Direct Assignment Facilities and/or Customer-Funded Upgrades, or specific unfinished portions and/or removal of any or all of such facilities which have been installed, to the extent required for the Transmission Provider and/or Transmission Owner(s) to perform their respective obligations under Tariff, Part IV and/or Part VI.

Capacity:

"Capacity" shall mean the installed capacity requirement of the Reliability Assurance Agreement or similar such requirements as may be established.

Capacity Interconnection Rights:

"Capacity Interconnection Rights" shall mean the rights to input generation as a Generation Capacity Resource into the Transmission System at the Point of Interconnection where the generating facilities connect to the Transmission System.

Capacity Resource:

"Capacity Resource" shall have the meaning provided in the Reliability Assurance Agreement.

Commencement Date:

"Commencement Date" shall mean the date on which Interconnection Service commences in accordance with an Interconnection Service Agreement.

Confidential Information:

"Confidential Information" shall mean any confidential, proprietary, or trade secret information of a plan, specification, pattern, procedure, design, device, list, concept, policy, or compilation relating to the present or planned business of a New Service Customer, Transmission Owner, or other Interconnection Party or Construction Party, which is designated as confidential by the party supplying the information, whether conveyed verbally, electronically, in writing, through inspection, or otherwise, and shall include, without limitation, all information relating to the producing party's technology, research and development, business affairs and pricing, and any information supplied by any New Service Customer, Transmission Owner, or other Interconnection Party or Construction Party to another such party prior to the execution of an Interconnection Service Agreement or a Construction Service Agreement.

Consolidated Transmission Owners Agreement, PJM Transmission Owners Agreement or Transmission Owners Agreement:

"Consolidated Transmission Owners Agreement," "PJM Transmission Owners Agreement" or "Transmission Owners Agreement" shall mean the certain Consolidated Transmission Owners Agreement dated as of December 15, 2005, by and among the Transmission Owners and by and between the Transmission Owners and PJM Interconnection, L.L.C. on file with the Commission, as amended from time to time.

Constructing Entity:

"Constructing Entity" shall mean either the Transmission Owner or the New Services Customer, depending on which entity has the construction responsibility pursuant to Tariff, Part VI and the applicable Construction Service Agreement; this term shall also be used to refer to an Interconnection Customer with respect to the construction of the Customer Interconnection Facilities.

Construction Party:

"Construction Party" shall mean a party to a Construction Service Agreement. "Construction Parties" shall mean all of the Parties to a Construction Service Agreement.

Construction Service Agreement:

"Construction Service Agreement" shall mean either an Interconnection Construction Service Agreement or an Upgrade Construction Service Agreement.

Contingent Facilities:

"Contingent Facilities" shall mean those unbuilt Interconnection Facilities and Network Upgrades upon which the Interconnection Request's costs, timing, and study findings are dependent and, if delayed or not built, could cause a need for restudies of the Interconnection

Request or a reassessment of the Interconnection Facilities and/or Network Upgrades and/or costs and timing.

Control Area:

"Control Area" shall mean an electric power system or combination of electric power systems bounded by interconnection metering and telemetry to which a common automatic generation control scheme is applied in order to:

(1) match the power output of the generators within the electric power system(s) and energy purchased from entities outside the electric power system(s), with the load within the electric power system(s);

(2) maintain scheduled interchange with other Control Areas, within the limits of Good Utility Practice;

(3) maintain the frequency of the electric power system(s) within reasonable limits in accordance with Good Utility Practice; and

(4) provide sufficient generating capacity to maintain operating reserves in accordance with Good Utility Practice.

Controllable A.C. Merchant Transmission Facilities:

"Controllable A.C. Merchant Transmission Facilities" shall mean transmission facilities that (1) employ technology which Transmission Provider reviews and verifies will permit control of the amount and/or direction of power flow on such facilities to such extent as to effectively enable the controllable facilities to be operated as if they were direct current transmission facilities, and (2) that are interconnected with the Transmission System pursuant to Tariff, Part IV and Part VI.

Costs:

As used in Tariff, Part IV, Part VI and related attachments, "Costs" shall mean costs and expenses, as estimated or calculated, as applicable, including, but not limited to, capital expenditures, if applicable, and overhead, return, and the costs of financing and taxes and any Incidental Expenses.

Customer Facility:

"Customer Facility" shall mean Generation Facilities or Merchant Transmission Facilities interconnected with or added to the Transmission System pursuant to an Interconnection Request under Subpart A of Tariff, Part IV.

Customer Interconnection Facilities:

"Customer Interconnection Facilities" shall mean all facilities and equipment owned and/or

controlled, operated and maintained by Interconnection Customer on Interconnection Customer's side of the Point of Interconnection identified in the appropriate appendices to the Interconnection Service Agreement and to the Interconnection Construction Service Agreement, including any modifications, additions, or upgrades made to such facilities and equipment, that are necessary to physically and electrically interconnect the Customer Facility with the Transmission System.

Default:

As used in the Interconnection Service Agreement and Construction Service Agreement, "Default" shall mean the failure of a Breaching Party to cure its Breach in accordance with the applicable provisions of an Interconnection Service Agreement or Construction Service Agreement.

Emergency Condition:

"Emergency Condition" shall mean a condition or situation (i) that in the judgment of any Interconnection Party is imminently likely to endanger life or property; or (ii) that in the judgment of the Interconnected Transmission Owner or Transmission Provider is imminently likely (as determined in a non-discriminatory manner) to cause a material adverse effect on the security of, or damage to, the Transmission System, the Interconnection Facilities, or the transmission systems or distribution systems to which the Transmission System is directly or indirectly connected; or (iii) that in the judgment of Interconnection Customer is imminently likely (as determined in a non-discriminatory manner) to cause damage to the Customer Facility or to the Customer Interconnection Facilities. System restoration and black start shall be considered Emergency Conditions, provided that a Generation Interconnection Customer is not obligated by an Interconnection Service Agreement to possess black start capability. Any condition or situation that results from lack of sufficient generating capacity to meet load requirements or that results solely from economic conditions shall not constitute an Emergency Condition, unless one or more of the enumerated conditions or situations identified in this definition also exists.

Energy Resource:

"Energy Resource" shall mean a Generating Facility that is not a Capacity Resource.

Energy Storage Resource:

"Energy Storage Resource" shall mean a resource capable of receiving electric energy from the grid and storing it for later injection to the grid that participates in the PJM Energy, Capacity and/or Ancillary Services markets as a Market Participant.

Facilities Study:

"Facilities Study" shall be an engineering study conducted by the Transmission Provider (in coordination with the affected Transmission Owner(s)) to: (1) determine the required

modifications to the Transmission Provider's Transmission System necessary to implement the conclusions of the System Impact Study; and (2) complete any additional studies or analyses documented in the System Impact Study or required by PJM Manuals, and determine the required modifications to the Transmission Provider's Transmission System based on the conclusions of such additional studies. The Facilities Study shall include the cost and scheduled completion date for such modifications, that will be required to provide the requested transmission service or to accommodate a New Service Request. As used in the Interconnection Service Agreement or Construction Service Agreement, Facilities Study shall mean that certain Facilities Study conducted by Transmission Provider (or at its direction) to determine the design and specification of the Customer Funded Upgrades necessary to accommodate the New Service Customer's New Service Request in accordance with Tariff, Part VI, section 207.

Federal Power Act:

"Federal Power Act" shall mean the Federal Power Act, as amended, 16 U.S.C. §§ 791a, et seq.

FERC or Commission:

"FERC" or "Commission" shall mean the Federal Energy Regulatory Commission or any successor federal agency, commission or department exercising jurisdiction over the Tariff, Operating Agreement and Reliability Assurance Agreement.

Generating Facilities:

"Generating Facilities" shall mean Interconnection Customer's device for the production and/or storage for later injection of electricity identified in the Interconnection Request, but shall not include the Interconnection Customer's Interconnection Facilities.

Generation Interconnection Customer:

"Generation Interconnection Customer" shall mean an entity that submits an Interconnection Request to interconnect a new generation facility or to increase the capacity of an existing generation facility interconnected with the Transmission System in the PJM Region.

Generation Interconnection Request:

"Generation Interconnection Request" shall mean a request by a Generation Interconnection Customer pursuant to Tariff, Part IV, subpart A, to interconnect a generating unit with the Transmission System or to increase the capacity of a generating unit interconnected with the Transmission System in the PJM Region.

Good Utility Practice:

"Good Utility Practice" shall mean any of the practices, methods and acts engaged in or approved by a significant portion of the electric utility industry during the relevant time period, or any of the practices, methods and acts which, in the exercise of reasonable judgment in light

of the facts known at the time the decision was made, could have been expected to accomplish the desired result at a reasonable cost consistent with good business practices, reliability, safety and expedition. Good Utility Practice is not intended to be limited to the optimum practice, method, or act to the exclusion of all others, but rather is intended to include acceptable practices, methods, or acts generally accepted in the region; including those practices required by Federal Power Act, section 215(a)(4).

Governmental Authority:

"Governmental Authority" shall mean any federal, state, local or other governmental, regulatory or administrative agency, court, commission, department, board, or other governmental subdivision, legislature, rulemaking board, tribunal, arbitrating body, or other governmental authority having jurisdiction over any Interconnection Party or Construction Party or regarding any matter relating to an Interconnection Service Agreement or Construction Service Agreement, as applicable.

Hazardous Substances:

"Hazardous Substance" shall mean any chemicals, materials or substances defined as or included in the definition of "hazardous substances," "hazardous wastes," "hazardous materials," "hazardous constituents," "restricted hazardous materials," "extremely hazardous substances," "toxic substances," "radioactive substances," "contaminants," "pollutants," "toxic pollutants" or words of similar meaning and regulatory effect under any applicable Environmental Law, or any other chemical, material or substance, exposure to which is prohibited, limited or regulated by any applicable Environmental Law.

Incremental Auction Revenue Rights:

"Incremental Auction Revenue Rights" shall mean the additional Auction Revenue Rights, not previously feasible, created by the addition of Incremental Rights-Eligible Required Transmission Enhancements, Merchant Transmission Facilities, or of one or more Customer-Funded Upgrades.

Incremental Available Transfer Capability Revenue Rights:

"Incremental Available Transfer Capability Revenue Rights" shall mean the rights to revenues that are derived from incremental Available Transfer Capability created by the addition of Merchant Transmission Facilities or of one of more Customer-Funded Upgrades.

Incremental Capacity Transfer Right:

"Incremental Capacity Transfer Right" shall mean a Capacity Transfer Right allocated to a Generation Interconnection Customer or Transmission Interconnection Customer obligated to fund a transmission facility or upgrade, to the extent such upgrade or facility increases the transmission import capability into a Locational Deliverability Area, or a Capacity Transfer Right allocated to a Responsible Customer in accordance with Tariff, Schedule 12A.

Incremental Deliverability Rights (IDRs):

"Incremental Deliverability Rights" or "IDRs" shall mean the rights to the incremental ability, resulting from the addition of Merchant Transmission Facilities, to inject energy and capacity at a point on the Transmission System, such that the injection satisfies the deliverability requirements of a Capacity Resource. Incremental Deliverability Rights may be obtained by a generator or a Generation Interconnection Customer, pursuant to an IDR Transfer Agreement, to satisfy, in part, the deliverability requirements necessary to obtain Capacity Interconnection Rights.

Initial Operation:

"Initial Operation" shall mean the commencement of operation of the Customer Facility and Customer Interconnection Facilities after satisfaction of the conditions of Tariff, Attachment O-Appendix 2, section 1.4 (an Interconnection Service Agreement).

Interconnected Entity:

"Interconnected Entity" shall mean either the Interconnection Customer or the Interconnected Transmission Owner; Interconnected Entities shall mean both of them.

Interconnected Transmission Owner:

"Interconnected Transmission Owner" shall mean the Transmission Owner to whose transmission facilities or distribution facilities Customer Interconnection Facilities are, or as the case may be, a Customer Facility is, being directly connected. When used in an Interconnection Construction Service Agreement, the term may refer to a Transmission Owner whose facilities must be upgraded pursuant to the Facilities Study, but whose facilities are not directly interconnected with those of the Interconnection Customer.

Interconnection Construction Service Agreement:

"Interconnection Construction Service Agreement" shall mean the agreement entered into by an Interconnection Customer, Interconnected Transmission Owner and the Transmission Provider pursuant to Tariff, Part VI, Subpart B and in the form set forth in Tariff, Attachment P, relating to construction of Attachment Facilities, Network Upgrades, and/or Local Upgrades and coordination of the construction and interconnection of an associated Customer Facility. A separate Interconnection Construction Service Agreement will be executed with each Transmission Owner that is responsible for construction of any Attachment Facilities, Network Upgrades, or Local Upgrades associated with interconnection of a Customer Facility.

Interconnection Customer:

"Interconnection Customer" shall mean a Generation Interconnection Customer and/or a Transmission Interconnection Customer.

Interconnection Facilities:

"Interconnection Facilities" shall mean the Transmission Owner Interconnection Facilities and the Customer Interconnection Facilities.

Interconnection Party:

"Interconnection Party" shall mean a Transmission Provider, Interconnection Customer, or the Interconnected Transmission Owner. Interconnection Parties shall mean all of them.

Interconnection Request:

"Interconnection Request" shall mean a Generation Interconnection Request, a Transmission Interconnection Request and/or an IDR Transfer Agreement.

Interconnection Service:

"Interconnection Service" shall mean the physical and electrical interconnection of the Customer Facility with the Transmission System pursuant to the terms of Tariff, Part IV and Tariff, Part VI and the Interconnection Service Agreement entered into pursuant thereto by Interconnection Customer, the Interconnected Transmission Owner and Transmission Provider.

Interconnection Service Agreement:

"Interconnection Service Agreement" shall mean an agreement among the Transmission Provider, an Interconnection Customer and an Interconnected Transmission Owner regarding interconnection under Tariff, Part IV and Tariff, Part VI.

List of Approved Contractors:

"List of Approved Contractors" shall mean a list developed by each Transmission Owner and published in a PJM Manual of (a) contractors that the Transmission Owner considers to be qualified to install or construct new facilities and/or upgrades or modifications to existing facilities on the Transmission Owner's system, provided that such contractors may include, but need not be limited to, contractors that, in addition to providing construction services, also provide design and/or other construction-related services, and (b) manufacturers or vendors of major transmission-related equipment (e.g., high-voltage transformers, transmission line, circuit breakers) whose products the Transmission Owner considers acceptable for installation and use on its system.

Load Serving Entity (LSE):

"Load Serving Entity" or "LSE" shall have the meaning specified in the Reliability Assurance Agreement.

Local Upgrades:

"Local Upgrades" shall mean modifications or additions of facilities to abate any local thermal loading, voltage, short circuit, stability or similar engineering problem caused by the interconnection and delivery of generation to the Transmission System. Local Upgrades shall include:

(i) Direct Connection Local Upgrades which are Local Upgrades that only serve the Customer Interconnection Facility and have no impact or potential impact on the Transmission System until the final tie-in is complete; and

(ii) Non-Direct Connection Local Upgrades which are parallel flow Local Upgrades that are not Direct Connection Local Upgrades.

Material Modification:

"Material Modification" shall mean any modification to an Interconnection Request that has a material adverse effect on the cost or timing of Interconnection Studies related to, or any Network Upgrades or Local Upgrades needed to accommodate, any Interconnection Request with a later Queue Position.

Maximum Facility Output:

"Maximum Facility Output" shall mean the maximum (not nominal) net electrical power output in megawatts, specified in the Interconnection Service Agreement, after supply of any parasitic or host facility loads, that a Generation Interconnection Customer's Customer Facility is expected to produce, provided that the specified Maximum Facility Output shall not exceed the output of the proposed Customer Facility that Transmission Provider utilized in the System Impact Study.

Maximum State of Charge:

"Maximum State of Charge" shall mean the maximum State of Charge that should not be exceeded, measured in units of megawatt-hours.

Merchant A.C. Transmission Facilities:

"Merchant A.C. Transmission Facility" shall mean Merchant Transmission Facilities that are alternating current (A.C.) transmission facilities, other than those that are Controllable A.C. Merchant Transmission Facilities.

Merchant D.C. Transmission Facilities:

"Merchant D.C. Transmission Facilities" shall mean direct current (D.C.) transmission facilities that are interconnected with the Transmission System pursuant to Tariff, Part IV and Tariff, Part VI.

Merchant Network Upgrades:

"Merchant Network Upgrades" shall mean additions to, or modifications or replacements of, physical facilities of the Interconnected Transmission Owner that, on the date of the pertinent Transmission Interconnection Customer's Upgrade Request, are part of the Transmission System or are included in the Regional Transmission Expansion Plan.

Merchant Transmission Facilities:

"Merchant Transmission Facilities" shall mean A.C. or D.C. transmission facilities that are interconnected with or added to the Transmission System pursuant to Tariff, Part IV and Tariff, Part VI and that are so identified in Tariff, Attachment T, provided, however, that Merchant Transmission Facilities shall not include (i) any Customer Interconnection Facilities, (ii) any physical facilities of the Transmission System that were in existence on or before March 20, 2003 ; (iii) any expansions or enhancements of the Transmission System that are not identified as Merchant Transmission Facilities in the Regional Transmission Expansion Plan and Tariff, Attachment T, or (iv) any transmission facilities that are included in the rate base of a public utility and on which a regulated return is earned.

Merchant Transmission Provider:

"Merchant Transmission Provider" shall mean an Interconnection Customer that (1) owns, controls, or controls the rights to use the transmission capability of, Merchant D.C. Transmission Facilities and/or Controllable A.C. Merchant Transmission Facilities that connect the Transmission System with another control area, (2) has elected to receive Transmission Injection Rights and Transmission Withdrawal Rights associated with such facility pursuant to Tariff, Part IV, section 36, and (3) makes (or will make) the transmission capability of such facilities available for use by third parties under terms and conditions approved by the Commission and stated in the Tariff, consistent with Tariff, Part IV, section 38.

Metering Equipment:

"Metering Equipment" shall mean all metering equipment installed at the metering points designated in the appropriate appendix to an Interconnection Service Agreement.

Minimum State of Charge:

"Minimum State of Charge" shall mean the minimum State of Charge that should be maintained in units of megawatt-hours.

NERC:

"NERC" shall mean the North American Electric Reliability Corporation or any successor thereto.

Network Upgrades:

"Network Upgrades" shall mean modifications or additions to transmission-related facilities that are integrated with and support the Transmission Provider's overall Transmission System for the general benefit of all users of such Transmission System. Network Upgrades shall include:

(i) **Direct Connection Network Upgrades** which are Network Upgrades that are not part of an Affected System; only serve the Customer Interconnection Facility; and have no impact or potential impact on the Transmission System until the final tie-in is complete. Both Transmission Provider and Interconnection Customer must agree as to what constitutes Direct Connection Network Upgrades and identify them in the Interconnection Construction Service Agreement, Schedule D. If the Transmission Provider and Interconnection Customer disagree about whether a particular Network Upgrade is a Direct Connection Network Upgrade, the Transmission Provider must provide the Interconnection Customer a written technical explanation outlining why the Transmission Provider does not consider the Network Upgrade to be a Direcct Connection Network Upgrade within 15 days of its determination.

(ii) **Non-Direct Connection Network Upgrades** which are parallel flow Network Upgrades that are not Direct Connection Network Upgrades.

New Service Request:

"New Service Request" shall mean an Interconnection Request, a Completed Application, or an Upgrade Request.

New Services Queue:

"New Services Queue" shall mean all Interconnection Requests, Completed Applications, and Upgrade Requests that are received within each six-month period ending on March 31 and September 30 of each year shall collectively comprise a New Services Queue.

Nominal Rated Capability:

"Nominal Rated Capability" shall mean the nominal maximum rated capability in megawatts of a Transmission Interconnection Customer's Customer Facility or the nominal increase in transmission capability in megawatts of the Transmission System resulting from the interconnection or addition of a Transmission Interconnection Customer's Customer Facility, as determined in accordance with pertinent Applicable Standards and specified in the Interconnection Service Agreement.

Operating Agreement of the PJM Interconnection, L.L.C., Operating Agreement or PJM Operating Agreement:

"Operating Agreement of the PJM Interconnection, L.L.C.," "Operating Agreement" or "PJM Operating Agreement" shall mean the Amended and Restated Operating Agreement of PJM Interconnection, L.L.C. dated as of April 1, 1997 and as amended and restated as of June 2,

1997, including all Schedules, Exhibits, Appendices, addenda or supplements hereto, as amended from time to time thereafter, among the Members of the PJM Interconnection, L.L.C., on file with the Commission.

Option to Build:

"Option to Build" shall mean the option of the New Service Customer to build certain Customer-Funded Upgrades, as set forth in, and subject to the terms of, the Construction Service Agreement.

Part I:

"Part I" shall mean the Tariff Definitions and Common Service Provisions contained in Tariff, Part I, sections 1 through 12A.

Part II:

"Part II" shall mean Tariff, Part II, sections 13 through 27A pertaining to Point-To-Point Transmission Service in conjunction with the applicable Common Service Provisions of Tariff, Part I and appropriate Schedules and Attachments.

Part III:

"Part III" shall mean Tariff, Part III, sections 28 through 35 pertaining to Network Integration Transmission Service in conjunction with the applicable Common Service Provisions of Tariff, Part I and appropriate Schedules and Attachments.

Part IV:

"Part IV" shall mean Tariff, Part IV, sections 36 through 112C pertaining to generation or merchant transmission interconnection to the Transmission System in conjunction with the applicable Common Service Provisions of Tariff, Part I and appropriate Schedules and Attachments.

Part VI:

"Part VI" shall mean Tariff, Part VI, sections 200 through 237 pertaining to the queuing, study, and agreements relating to New Service Requests, and the rights associated with Customer-Funded Upgrades in conjunction with the applicable Common Service Provisions of Tariff, Part I and appropriate Schedules and Attachments.

Parties:

"Parties" shall mean the Transmission Provider, as administrator of the Tariff, and the Transmission Customer receiving service under the Tariff. PJMSettlement shall be the Counterparty to Transmission Customers.

PJM:

"PJM" shall mean PJM Interconnection, L.L.C., including the Office of the Interconnection as referenced in the PJM Operating Agreement. When such term is being used in the RAA it shall also include the PJM Board.

PJM Manuals:

"PJM Manuals" shall mean the instructions, rules, procedures and guidelines established by the Office of the Interconnection for the operation, planning, and accounting requirements of the PJM Region and the PJM Interchange Energy Market.

PJM Region:

"PJM Region" shall have the meaning specified in the Operating Agreement.

PJM Tariff, Tariff, O.A.T.T., OATT or PJM Open Access Transmission Tariff:

"PJM Tariff," "Tariff," "O.A.T.T.," "OATT," or "PJM Open Access Transmission Tariff" shall mean that certain PJM Open Access Transmission Tariff, including any schedules, appendices or exhibits attached thereto, on file with FERC and as amended from time to time thereafter.

Point of Interconnection:

"Point of Interconnection" shall mean the point or points where the Customer Interconnection Facilities interconnect with the Transmission Owner Interconnection Facilities or the Transmission System.

Project Finance Entity:

"Project Finance Entity" shall mean: (a) a holder, trustee or agent for holders, of any component of Project Financing; or (b) any purchaser of capacity and/or energy produced by the Customer Facility to which Interconnection Customer has granted a mortgage or other lien as security for some or all of Interconnection Customer's obligations under the corresponding power purchase agreement.

Provisional Interconnection Service:

"Provisional Interconnection Service" shall mean interconnection service provided by Transmission Provider associated with interconnecting the Interconnection Customer's Generating Facility to Transmission Provider's Transmission System and enabling that Transmission System to receive electric energy and capacity from the Generating Facility at the Point of Interconnection, pursuant to the terms of the Interconnection Service Agreement and, if applicable, the Tariff.

Queue Position:

"Queue Position" shall mean the priority assigned to an Interconnection Request, a Completed Application, or an Upgrade Request pursuant to applicable provisions of Tariff, Part VI.

Reasonable Efforts:

"Reasonable Efforts" shall mean, with respect to any action required to be made, attempted, or taken by an Interconnection Party or by a Construction Party under Tariff, Part IV or Tariff, Part VI, an Interconnection Service Agreement, or a Construction Service Agreement, such efforts as are timely and consistent with Good Utility Practice and with efforts that such party would undertake for the protection of its own interests.

Regional Entity:

"Regional Entity" shall have the same meaning specified in the Operating Agreement.

Regional Transmission Expansion Plan:

"Regional Transmission Expansion Plan" shall mean the plan prepared by the Office of the Interconnection pursuant to Operating Agreement, Schedule 6 for the enhancement and expansion of the Transmission System in order to meet the demands for firm transmission service in the PJM Region.

Reliability Assurance Agreement or PJM Reliability Assurance Agreement:

"Reliability Assurance Agreement" or "PJM Reliability Assurance Agreement" shall mean that certain Reliability Assurance Agreement Among Load Serving Entities in the PJM Region, on file with FERC as PJM Interconnection L.L.C. Rate Schedule FERC No. 44, and as amended from time to time thereafter.

Schedule of Work:

"Schedule of Work" shall mean that schedule attached to the Interconnection Construction Service Agreement setting forth the timing of work to be performed by the Constructing Entity pursuant to the Interconnection Construction Service Agreement, based upon the Facilities Study and subject to modification, as required, in accordance with Transmission Provider's scope change process for interconnection projects set forth in the PJM Manuals.

Scope of Work:

"Scope of Work" shall mean that scope of the work attached as a schedule to the Interconnection Construction Service Agreement and to be performed by the Constructing Entity(ies) pursuant to the Interconnection Construction Service Agreement, provided that such Scope of Work may be modified, as required, in accordance with Transmission Provider's scope change process for interconnection projects set forth in the PJM Manuals.

Secondary Systems:

"Secondary Systems" shall mean control or power circuits that operate below 600 volts, AC or DC, including, but not limited to, any hardware, control or protective devices, cables, conductors, electric raceways, secondary equipment panels, transducers, batteries, chargers, and voltage and current transformers.

Security:

"Security" shall mean the security provided by the New Service Customer pursuant to Tariff, section 212.4 or Tariff, Part VI, section 213.4 to secure the New Service Customer's responsibility for Costs under the Interconnection Service Agreement or Upgrade Construction Service Agreement and Tariff, Part VI, section 217.

Service Agreement:

"Service Agreement" shall mean the initial agreement and any amendments or supplements thereto entered into by the Transmission Customer and the Transmission Provider for service under the Tariff.

Site:

"Site" shall mean all of the real property, including but not limited to any leased real property and easements, on which the Customer Facility is situated and/or on which the Customer Interconnection Facilities are to be located.

State:

"State" shall mean the District of Columbia and any State or Commonwealth of the United States.

State of Charge:

"State of Charge" shall mean the operating parameter that represents the quantity of physical energy stored (measured in units of megawatt-hours) in an Energy Storage Resource Model Participant in proportion to its maximum State of Charge capability. State of Charge is quantified as defined in the PJM Manuals.

Station Power:

"Station Power" shall mean energy used for operating the electric equipment on the site of a generation facility located in the PJM Region or for the heating, lighting, air-conditioning and office equipment needs of buildings on the site of such a generation facility that are used in the operation, maintenance, or repair of the facility. Station Power does not include any energy (i) used to power synchronous condensers; (ii) used for pumping at a pumped storage facility; (iii)

used in association with restoration or black start service; or (iv) that is Direct Charging Energy.

Surplus Interconnection Customer:

"Surplus Interconnection Customer" shall mean either an Interconnection Customer whose Generating Facility is already interconnected to the PJM Transmission System or one of its affiliates, or an unaffiliated entity that submits a Surplus Interconnection Request to utilize Surplus Interconnection Service within the Transmission System in the PJM Region. A Surplus Interconnection Customer is not a New Service Customer.

Surplus Interconnection Request:

"Surplus Interconnection Request" shall mean a request submitted by a Surplus Interconnection Customer, pursuant to Tariff, Attachment RR, to utilize Surplus Interconnection Service within the Transmission System in the PJM Region. A Surplus Interconnection Request is not a New Service Request.

Surplus Interconnection Service:

"Surplus Interconnection Service" shall mean any unneeded portion of Interconnection Service established in an Interconnection Service Agreement, such that if Surplus Interconnection Service is utilized, the total amount of Interconnection Service at the Point of Interconnection would remain the same.

Switching and Tagging Rules:

"Switching and Tagging Rules" shall mean the switching and tagging procedures of Interconnected Transmission Owners and Interconnection Customer as they may be amended from time to time.

System Impact Study:

"System Impact Study" shall mean an assessment by the Transmission Provider of (i) the adequacy of the Transmission System to accommodate a Completed Application, an Interconnection Request or an Upgrade Request, (ii) whether any additional costs may be incurred in order to provide such transmission service or to accommodate an Interconnection Request, and (iii) with respect to an Interconnection Request, an estimated date that an Interconnection Customer's Customer Facility can be interconnected with the Transmission System and an estimate of the Interconnection Customer's cost responsibility for the interconnection; and (iv) with respect to an Upgrade Request, the estimated cost of the requested system upgrades or expansion, or of the cost of the system upgrades or expansion, necessary to provide the requested incremental rights.

System Protection Facilities:

"System Protection Facilities" shall refer to the equipment required to protect (i) the

Transmission System, other delivery systems and/or other generating systems connected to the Transmission System from faults or other electrical disturbance occurring at or on the Customer Facility, and (ii) the Customer Facility from faults or other electrical system disturbance occurring on the Transmission System or on other delivery systems and/or other generating systems to which the Transmission System is directly or indirectly connected. System Protection Facilities shall include such protective and regulating devices as are identified in the Applicable Technical Requirements and Standards or that are required by Applicable Laws and Regulations or other Applicable Standards, or as are otherwise necessary to protect personnel and equipment and to minimize deleterious effects to the Transmission System arising from the Customer Facility.

Transmission Facilities:

"Transmission Facilities" shall have the meaning set forth in the Operating Agreement.

Transmission Injection Rights:

"Transmission Injection Rights" shall mean Capacity Transmission Injection Rights and Energy Transmission Injection Rights.

Transmission Interconnection Customer:

"Transmission Interconnection Customer" shall mean an entity that submits an Interconnection Request to interconnect or add Merchant Transmission Facilities to the Transmission System or to increase the capacity of Merchant Transmission Facilities interconnected with the Transmission System in the PJM Region or an entity that submits an Upgrade Request for Merchant Network Upgrades (including accelerating the construction of any transmission enhancement or expansion, other than Merchant Transmission Facilities, that is included in the Regional Transmission Expansion Plan prepared pursuant to Operating Agreement, Schedule 6).

Transmission Owner:

"Transmission Owner" shall mean a Member that owns or leases with rights equivalent to ownership Transmission Facilities and is a signatory to the PJM Transmission Owners Agreement. Taking transmission service shall not be sufficient to qualify a Member as a Transmission Owner.

Transmission Owner Attachment Facilities:

"Transmission Owner Attachment Facilities" shall mean that portion of the Transmission Owner Interconnection Facilities comprised of all Attachment Facilities on the Interconnected Transmission Owner's side of the Point of Interconnection.

Transmission Owner Interconnection Facilities:

"Transmission Owner Interconnection Facilities" shall mean all Interconnection Facilities that

are not Customer Interconnection Facilities and that, after the transfer under Tariff, Attachment P, Appendix 2, section 5.5 to the Interconnected Transmission Owner of title to any Transmission Owner Interconnection Facilities that the Interconnection Customer constructed, are owned, controlled, operated and maintained by the Interconnected Transmission Owner on the Interconnected Transmission Owner's side of the Point of Interconnection identified in appendices to the Interconnection Service Agreement and to the Interconnection Construction Service Agreement, including any modifications, additions or upgrades made to such facilities and equipment, that are necessary to physically and electrically interconnect the Customer Facility with the Transmission System or interconnected distribution facilities.

Transmission Provider:

The "Transmission Provider" shall be the Office of the Interconnection for all purposes, provided that the Transmission Owners will have the responsibility for the following specified activities:

(a) The Office of the Interconnection shall direct the operation and coordinate the maintenance of the Transmission System, except that the Transmission Owners will continue to direct the operation and maintenance of those transmission facilities that are not listed in the PJM Designated Facilities List contained in the PJM Manual on Transmission Operations;

(b) Each Transmission Owner shall physically operate and maintain all of the facilities that it owns; and

(c) When studies conducted by the Office of the Interconnection indicate that enhancements or modifications to the Transmission System are necessary, the Transmission Owners shall have the responsibility, in accordance with the applicable terms of the Tariff, Operating Agreement and/or the Consolidated Transmission Owners Agreement to construct, own, and finance the needed facilities or enhancements or modifications to facilities.

Transmission Service:

"Transmission Service" shall mean Point-To-Point Transmission Service provided under Tariff, Part II on a firm and non-firm basis.

Transmission System:

"Transmission System" shall mean the facilities controlled or operated by the Transmission Provider within the PJM Region that are used to provide transmission service under Tariff, Part II and Part III.

Transmission Withdrawal Rights:

"Transmission Withdrawal Rights" shall mean Firm Transmission Withdrawal Rights and Non-Firm Transmission Withdrawal Rights.

APPENDIX 2

STANDARD TERMS AND CONDITIONS FOR INTERCONNECTIONS

1 Commencement, Term of and Conditions Precedent to Interconnection Service

1.1 Commencement Date:

The effective date of an Interconnection Service Agreement shall be the date provided in Section 4.0 of the Interconnection Service Agreement. Interconnection Service under this Interconnection Service Agreement shall commence upon the satisfaction of the conditions precedent set forth in Section 1.2 below.

1.2 Conditions Precedent:

The following conditions must be satisfied prior to the commencement of Interconnection Service under this Interconnection Service Agreement:

(a) This Interconnection Service Agreement, if filed with FERC, shall have been accepted for filing by the FERC;

(b) All requirements for Initial Operation as specified in Section 1.4 below shall have been met and Initial Operation of the Customer Facility shall have been completed.

(c) Interconnection Customer shall be in compliance with all Applicable Technical Requirements and Standards for interconnection under the Tariff (as determined by the Transmission Provider).

1.3 Term:

This Interconnection Service Agreement shall remain in full force and effect until it is terminated in accordance with Section 16 of this Appendix 2.

1.4 Initial Operation:

The following requirements shall be satisfied prior to Initial Operation of the Customer Facility:

1.4.1 The construction of all Interconnection Facilities necessary for the interconnection of the Customer Facility has been completed;

1.4.2 The Interconnected Transmission Owner has accepted any Interconnection Facilities constructed by Interconnection Customer pursuant to the Interconnection Construction Service Agreement;

1.4.3 The Interconnection Customer and the Interconnected Transmission Owner have all necessary systems and personnel in place to allow for parallel operation of their respective facilities;

1.4.4 The Interconnected Transmission Owner has received all applicable documentation for the Interconnection Facilities built by the Interconnection Customer, certified as correct,

including, but not limited to, access to the field copy of marked-up drawings reflecting the as-built condition, pre-operation test reports, and instruction books; and

1.4.5 Interconnection Customer shall have received any necessary authorization from Transmission Provider to synchronize with the Transmission System or to energize, as applicable per the determination of Transmission Provider, the Customer Facility and Interconnection Facilities.

1.4A Other Interconnection Options

1.4A.1 Limited Operation:

If any of the Transmission Owner Interconnection Facilities are not reasonably expected to be completed prior to the Interconnection Customer's planned date of Initial Operation, and provided that the Interconnected Transmission Owner has accepted the Customer Interconnection Facilities pursuant to the Interconnection Construction Service Agreement, Transmission Provider shall, upon the request and at the expense of Interconnection Customer, perform appropriate power flow or other operating studies on a timely basis to determine the extent to which the Customer Facility and the Customer Interconnection Facilities may operate prior to the completion of the Transmission Owner Interconnection Facilities consistent with Applicable Laws and Regulations, Applicable Reliability Standards, Good Utility Practice, and the Interconnection Service Agreement. In accordance with the results of such studies and subject to such conditions as Transmission Provider determines to be reasonable and appropriate, Transmission Provider shall (a) permit Interconnection Customer to operate the Customer Facility and the Customer Interconnection Facilities, and (b) grant Interconnection Customer limited, interim Interconnection Rights commensurate with the extent to which operation of the Customer Facility is permitted.

1.4A.2 Provisional Interconnection Service:

Upon the request of Interconnection Customer, and prior to completion of requisite Interconnection Facilities, Network Upgrades, Local Upgrades, or system protection facilities Interconnection Customer may request limited Interconnection Service at the discretion of Transmission Provider based upon an evaluation that will consider the results of available studies, which terms shall be memorialized in the Interconnection Service Agreement. Consistent with Tariff, Part VI, Subpart B, section 212.4, Interconnection Customer may execute the Interconnection Service Agreement, request dispute resolution or request that the Interconnection Service Agreement be filed unexecuted with the Commission. Transmission Provider shall determine, through available studies or additional studies as necessary, whether stability, short circuit, thermal, and/or voltage issues would arise if Interconnection Customer interconnects without modifications to the Generating Facility or the Transmission System. Transmission Provider shall determine whether any Interconnection Facilities, Network Upgrades, Local Upgrades, or system protection facilities that are necessary to meet the requirements of NERC, or any applicable Regional Entity for the interconnection of a new, modified and/or expanded Generating Facility are in place prior to the commencement of Interconnection Service from the Generating Facility. Where available studies indicate that such

Interconnection Facilities, Network Upgrades, Local Upgrades, and/or system protection facilities that are required for the interconnection of a new, modified and/or expanded Generating Facility are not currently in place, Transmission Provider will perform a study, at the Interconnection Customer's expense, to confirm the facilities that are required for Provisional Interconnection Service. The maximum permissible output of the Generating Facility shall be studied and updated annually and at the Interconnection Customer's expense. The results will be communicated to the Interconnection Customer in writing upon completion of the study. Interconnection Customer assumes all risk and liabilities with respect to the Provisional Interconnection Service, including changes in output limits and Interconnection Facilities, Network Upgrades, Local Upgrades, and/or system protection facilities cost responsibilities.

1.5 Survival:

The Interconnection Service Agreement shall continue in effect after termination to the extent necessary to provide for final billings and payments; to permit the determination and enforcement of liability and indemnification obligations arising from acts or events that occurred while the Interconnection Service Agreement was in effect; and to permit each Interconnection Party to have access to the real property, including but not limited to leased property and easements of the other Interconnection Parties pursuant to Section 16 of this Appendix 2 to disconnect, remove or salvage its own facilities and equipment.

2 Interconnection Service

2.1 Scope of Service:

Interconnection Service shall be provided to the Interconnection Customer at the Point of Interconnection (a), in the case of interconnection of the Customer Facility of a Generation Interconnection Customer, up to the Maximum Facility Output, and (b), in the case of interconnection of the Customer Facility of a Transmission Interconnection Customer, up to the Nominal Rated Capability. The location of the Point of Interconnection shall be mutually agreed by the Interconnected Entities, provided, however, that if the Interconnected Entities are unable to agree on the Point of Interconnection, the Transmission Provider shall determine the Point of Interconnection, provided that Transmission Provider shall not select a Point of Interconnection that would impose excessive costs on either of the Interconnected Entities and shall take material system reliability considerations into account in such selection. Specifications for the Customer Facility and the location of the Point of Interconnection shall be set forth in an appendix to the Interconnection Service Agreement and shall conform to those stated in the Facilities Study.

2.2 Non-Standard Terms:

The standard terms and conditions of this Appendix 2 shall not apply, to such extent as Transmission Provider determines to be reasonably necessary to accommodate such circumstances, in the event that the Interconnection Customer acquires an ownership interest in facilities which, under the standard terms and conditions of the Interconnection Construction Service Agreement would be part of the Transmission Owner Interconnection Facilities. In such circumstances and to the extent determined by Transmission Provider to be reasonably

necessary, non-standard terms and conditions mutually agreed upon by all Interconnection Parties shall apply, subject to FERC and any other necessary regulatory acceptance or approval. In addition, a Generation Interconnection Customer that acquires an ownership interest in such facilities shall become, and shall remain for so long as it retains such interest, a signatory to the Consolidated Transmission Owners Agreement.

2.3 No Transmission Services:

The execution of an Interconnection Service Agreement does not constitute a request for transmission service, or entitle Interconnection Customer to receive transmission service, under Part II or Part III of the Tariff. Nor does the execution of an Interconnection Service Agreement obligate the Interconnected Transmission Owner or Transmission Provider to procure, supply or deliver to Interconnection Customer or the Customer Facility any energy, capacity, Ancillary Services or Station Power (and any associated distribution services).

2.4 Use of Distribution Facilities:

To the extent that a Generation Interconnection Customer uses distribution facilities for the purpose of delivering energy to the Transmission System, Interconnection Service under this Tariff shall include the construction and/or use of such distribution facilities. In such cases, to such extent as Transmission Provider determines to be reasonably necessary to accommodate such circumstances, the Interconnection Service Agreement may include non-standard terms and conditions mutually agreed upon by all Interconnection Parties as needed to conform with Applicable Laws and Regulations and Applicable Standards relating to such distribution facilities.

2.5 Election by Behind The Meter Generation:

In the event that a Generation Interconnection Customer's Customer Facility is Behind The Meter Generation, the Generation Interconnection Customer may elect from time to time, subject to the terms of this section, whether to operate all or a portion of its Customer Facility's generating capacity as a Capacity Resource under the Tariff and the Operating Agreement.

2.5.1 Capacity Resource Election:

The Generation Interconnection Customer may elect to operate all or a portion of its Customer Facility as a Capacity Resource only to the extent that the Interconnection Service Agreement grants Capacity Interconnection Rights. Such an election may include all or any portion of the Customer Facility's capacity for which Capacity Interconnection Rights have been granted.

2.5.2 Timing and Duration of Election:

The Generation Interconnection Customer shall make an initial election under this section no later than 30 days prior to the commencement of Interconnection Service. Thereafter, the Generation Interconnection Customer may make the election authorized by this Section 2.5 only once in each calendar year and must notify Transmission Provider of such an election no later

than May 1, and no sooner than March 15, of each year. Each such election shall be effective commencing on June 1 following Transmission Provider's receipt of notice of the election. An election under this Section 2.5 shall remain in effect unless and until the Generation Interconnection Customer modifies or terminates it in a subsequent election made in accordance with the terms of this section.

3 Modification Of Facilities

3.1 General:

Subject to Applicable Laws and Regulations and to any applicable requirements or conditions of the Tariff and the Operating Agreement, either Interconnected Entity may undertake modifications to its facilities. In the event that an Interconnected Entity plans to undertake a modification that reasonably may be expected upon completion to have a permanent material impact on the other Interconnected Entity's facilities, that Interconnected Entity, in accordance with Good Utility Practice, shall provide the other Interconnection Parties with sufficient information regarding such modification, so that the other Interconnection Parties may evaluate the potential impact of such modification prior to commencement of the work. The Interconnected Entity desiring to perform such modification shall provide the relevant drawings, plans, and specifications to the other Interconnection Parties at least ninety days, or such shorter period to which the Interconnection Parties receiving the information may agree (which agreement shall not unreasonably be withheld, conditioned, or delayed), in advance of the beginning of the work. The Interconnection Customer shall notify Transmission Provider and Interconnected Transmission Owner of the proposed modifications and Transmission Provider shall provide, within sixty days of receipt of the relevant drawings and specifications (or within such other time upon which the Interconnection Parties may agree), an estimate of any modifications to the Transmission System that would be necessary to accommodate the proposed modifications by Interconnection Customer and a good faith estimate of the costs thereof.

3.2 Interconnection Request:

This Section 3 shall not apply to any proposed modifications by Interconnection Customer to its facilities for which Interconnection Customer must make an Interconnection Request under the Tariff. In such circumstances, the Interconnection Customer and Transmission Provider shall follow the requirements of Subpart A of Part IV of the Tariff.

3.3 Standards:

Any additions, modifications, or replacements made to an Interconnected Entity's facilities shall be constructed and operated in accordance with Good Utility Practice, Applicable Standards and Applicable Laws and Regulations.

3.4 Modification Costs:

Unless otherwise required by Applicable Laws and Regulations or this Appendix 2 and, with respect to a Transmission Interconnection Customer, subject to the terms of Section 236.2 of the Tariff:

(a) Interconnection Customer shall not be responsible for the costs of any additions, modifications, or replacements that the Interconnected Transmission Owner in its discretion or at the direction of Transmission Provider makes to the Interconnection Facilities or the Transmission System in order to facilitate the interconnection of a third party to the Interconnection Facilities or the Transmission System, or to provide transmission service under the Tariff to a third party.

(b) Interconnection Customer shall be responsible for the costs of any additions, modifications, or replacements to the Interconnection Facilities or the Transmission System that are required, in accord with Good Utility Practice and/or to maintain compliance with Applicable Laws and Regulations or Applicable Standards, in order to accommodate additions, modifications, or replacements made by Interconnection Customer to the Customer Facility or to the Customer Interconnection Facilities.

(c) Interconnection Customer shall be responsible for the costs of any additions, modifications, or replacements to the Customer Interconnection Facilities or the Customer Facility that are required, in accord with Good Utility Practice and/or to maintain compliance with Applicable Laws and Regulations or Applicable Standards, in order to accommodate additions, modifications, or replacements that Transmission Provider or the Interconnected Transmission Owner makes to the Transmission System or to the Transmission Owner Interconnection Facilities, but only to the extent that Transmission Provider's or the Interconnected Transmission Owner's changes to the Transmission System or the Transmission Owner Interconnection Facilities are made pursuant to Good Utility Practice and/or to maintain compliance with Applicable Laws and Regulations or Applicable Standards.

4 Operations

4.1 General:

Each Interconnected Entity shall operate, or shall cause operation of, its facilities in a safe and reliable manner in accord with (i) the terms of this Appendix 2; (ii) Applicable Standards; (iii) applicable rules, procedures and protocols set forth in the Tariff and the Operating Agreement, as any or all may be amended from time to time; (iv) Applicable Laws and Regulations, and (v) Good Utility Practice.

4.1.1 Interconnection Customer Drawings:

Within one hundred twenty (120) days after the date of Initial Operation, unless the Interconnection Parties agree on another mutually acceptable deadline, the Interconnection Customer shall deliver to the Transmission Provider and the Interconnected Transmission Owner final, "as-built" drawings, information and documents regarding the Customer Interconnection Facilities, including, as and to the extent applicable: a one-line diagram, a site plan showing the

Customer Facility and the Customer Interconnection Facilities, plan and elevation drawings showing the layout of the Customer Interconnection Facilities, a relay functional diagram, relaying AC and DC schematic wiring diagrams and relay settings for all facilities associated with the Interconnection Customer's step-up transformers, the facilities connecting the Customer Facility to the step-up transformers and the Customer Interconnection Facilities, and the impedances (determined by factory tests) for the associated step-up transformers and the Customer Facility. As applicable, the Interconnection Customer shall provide Transmission Provider and the Interconnected Transmission Owner specifications for the excitation system, automatic voltage regulator, Customer Facility control and protection settings, transformer tap settings, and communications.

4.2 [Reserved.]

4.3 Interconnection Customer Obligations:

Interconnection Customer shall obtain Transmission Provider's approval prior to either synchronizing with the Transmission System or energizing, as applicable per the determination of Transmission Provider, the Customer Facility or, except in an Emergency Condition, disconnecting the Customer Facility from the Transmission System, and shall coordinate such synchronizations, energizations, and disconnections with the Interconnected Transmission Owner.

4.4 Transmission Interconnection Customer Obligations:

A Transmission Interconnection Customer that will be a Merchant Transmission Provider is subject to the terms and conditions in Tariff, Section 38.

4.5 Permits and Rights-of-Way:

Each Interconnected Entity at its own expense shall maintain in full force and effect all permits, licenses, rights-of-way and other authorizations as may be required to maintain the Customer Facility and the Interconnection Facilities that the entity owns, operates and maintains and, upon reasonable request of the other Interconnected Entity, shall provide copies of such permits, licenses, rights-of-way and other authorizations at its own expense to the requesting party.

4.6 No Ancillary Services:

Except as provided in Section 4.7 of this Appendix 2, nothing in this Appendix 2 is intended to obligate the Interconnection Customer to supply Ancillary Services to either Transmission Provider or the Interconnected Transmission Owner.

4.7 Reactive Power and Primary Frequency Response

4.7.1 Reactive Power

4.7.1.1 Reactive Power Design Criteria

4.7.1.1.1 New Facilities:

For all new Generating Facilities to be interconnected pursuant to the Tariff, other than wind-powered and other non-synchronous generation facilities, the Generation Interconnection Customer shall design its Customer Facility to maintain a composite power delivery at continuous rated power output at a power factor of at least 0.95 leading to 0.90 lagging. For all new wind-powered and other non-synchronous generation facilities the Generation Interconnection Customer shall design its Customer Facility with the ability to maintain a composite power delivery at a power factor of at least 0.95 leading to 0.95 lagging across the full range of continuous rated power output. For all wind-powered and other non-synchronous generation facilities entering the New Service Queue on or after November 1, 2016, the power factor requirement shall be measured at the high-side of the facility substation transformers. This power factor range standard shall be dynamic and can be met using, for example, power electronics designed to supply this level of reactive capability (taking into account any limitations due to voltage level, real power output, etc.) or fixed and switched capacitors, or a combination of the two. For all wind-powered and other non-synchronous generation facilities entering the New Service Queue on or after May 1, 2015, and before November 1, 2016, the power factor requirement shall be measured at the generator's terminals. For new generation resources of more than 20 MW, other than wind-powered and other non-synchronous Generating Facilities, the power factor requirement shall be measured at the generator's terminals. For new generation resources of 20 MW or less, and all wind-powered and other non-synchronous generation facilities entering the New Service Queue prior to May 1, 2015, the power factor requirement shall be measured at the Point of Interconnection. Any different reactive power design criteria that Transmission Provider determines to be appropriate for a wind-powered or other non-synchronous generation facility shall be stated in the Interconnection Service Agreement. A Transmission Interconnection Customer interconnecting Merchant D.C. Transmission Facilities and/ or Controllable A.C. Merchant Transmission Facilities shall design its Customer Facility to maintain a power factor at the Point of Interconnection of at least 0.95 leading and 0.95 lagging, when the Customer Facility is operating at any level within its approved operating range.

4.7.1.1.2 Increases in Generating Capacity or Energy Output:

All increases in the capacity or energy output of any generation facility interconnected with the Transmission System, other than wind-powered and other non-synchronous Generating Facilities, shall be designed with the ability to maintain a composite power delivery at continuous rated power output at a power factor for all incremental MW of capacity or energy output, of at least 1.0 (unity) to 0.90 lagging. Wind-powered generation facilities and other non-synchronous generation facilities entering the New Service Queue on or after November 1, 2016, shall be designed with the ability to maintain a composite power delivery at a power factor for all incremental MW of capacity or energy output of at least 0.95 leading to 0.95 lagging measured at the high-side of the facility substation transformers across the full range of continuous rated power output. This power factor range standard shall be dynamic and can be met using, for example, power electronics designed to supply this level of reactive capability (taking into account any limitations due to voltage level, real power output, etc.) or fixed and switched

capacitors, or a combination of the two. Wind-powered generation facilities and other non-synchronous generation facilities entering the New Service Queue on or after May 1, 2015, and before November 1, 2016, shall be designed with the ability to maintain a composite power delivery at a power factor for all incremental MW of capacity or energy output, of at least 0.95 leading to 0.95 lagging measured at the generator's terminals under conditions in which a wind-powered generation facility's real power output exceeds 25 percent of its continuous rated power output and, for all other non-synchronous generation facilities, across the full range of continuous rated power output. Wind-powered generation facilities and other non-synchronous generation facilities entering the New Service Queue prior to May 1, 2015 shall be designed with the ability to maintain a composite power delivery at continuous rated power output at a power factor for all incremental MW of capacity of energy output of at least 1.0 (unity) to 0.95 lagging measured at the generator's terminals. The power factor requirement associated with increases in capacity or energy output of more than 20 MW to synchronous generation facilities interconnected with the Transmission System shall be measured at the generator's terminals. The power factor requirement associated with increases in capacity or energy output of 20 MW or less to synchronous generation facilities interconnected to the Transmission System shall be measured at the Point of Interconnection.

4.7.1.2 Obligation to Supply Reactive Power:

Interconnection Customer agrees, as and when so directed by Transmission Provider or when so directed by the Interconnected Transmission Owner acting on behalf or at the direction of Transmission Provider, to operate the Customer Facility to produce reactive power within the design limitations of the Customer Facility pursuant to voltage schedules, reactive power schedules or power factor schedules established by Transmission Provider or, as appropriate, the Interconnected Transmission Owner. Transmission Provider shall maintain oversight over such schedules to ensure that all sources of reactive power in the PJM Region, as applicable, are treated in an equitable and not unduly discriminatory manner. Interconnection Customer agrees that Transmission Provider and the Interconnected Transmission Owner, acting on behalf or at the direction of Transmission Provider, may make changes to the schedules that they respectively establish as necessary to maintain the reliability of the Transmission System.

4.7.1.3 Deviations from Schedules:

In the event that operation of the Customer Facility of an Interconnection Customer causes the Transmission System or the Interconnected Transmission Owner's facilities to deviate from appropriate voltage schedules and/or reactive power schedules as specified by Transmission Provider or the Interconnected Transmission Owner's operations control center (acting on behalf or at the direction of Transmission Provider), or that otherwise is inconsistent with Good Utility Practice and results in an unreasonable deterioration of the quality of electric service to other customers of Transmission Provider or the Interconnected Transmission Owner, the Interconnection Customer shall, upon discovery of the problem or upon notice from Transmission Provider or the Interconnected Transmission Owner, acting on behalf or at the direction of Transmission Provider, take whatever steps are reasonably necessary to alleviate the situation at its expense, in accord with Good Utility Practice and within the reactive capability of the Customer Facility. In the event that the Interconnection Customer does not alleviate the

situation within a reasonable period of time following Transmission Provider's or the Interconnected Transmission Owner's notice thereof, the Interconnected Transmission Owner, with Transmission Provider's approval, upon notice to the Interconnection Customer and at the Interconnection Customer's expense, may take appropriate action, including installation on the Transmission System of power factor correction or other equipment, as is reasonably required, consistent with Good Utility Practice, to remedy the situation cited in Transmission Provider's or the Interconnected Transmission Owner's notice to the Interconnection Customer under this section.

4.7.1.4 Payment for Reactive Power:

Any payments to the Interconnection Customer for reactive power shall be in accordance with Schedule 2 of the Tariff.

4.7.2 Primary Frequency Response:

Section 4.7.2 of this ISA and its subsections apply to New Service Requests received on or after October 1, 2018.

Generation Interconnection Customer shall ensure the primary frequency response capability of its Customer Facility by installing, maintaining, and operating a functioning governor or equivalent controls. The term "functioning governor or equivalent controls" as used herein shall mean the required hardware and/or software that provides frequency responsive real power control with the ability to sense changes in system frequency and autonomously adjust the Customer Facility's real power output in accordance with the droop and deadband parameters and in the direction needed to correct frequency deviations. Generation Interconnection Customer is required to install a governor or equivalent controls with the capability of operating: (1) with a maximum 5 percent droop and ±0.036 Hz deadband; or (2) in accordance with the relevant droop, deadband, and timely and sustained response settings from an approved NERC Reliability Standard providing for equivalent or more stringent parameters. The droop characteristic shall be: (1) based on the nameplate capacity of the Customer Facility, and shall be linear in the range of frequencies between 59 to 61 Hz that are outside of the deadband parameter; or (2) based an approved NERC Reliability Standard providing for an equivalent or more stringent parameter. The deadband parameter shall be: the range of frequencies above and below nominal (60 Hz) in which the governor or equivalent controls is not expected to adjust the Customer Facility's real power output in response to frequency deviations. The deadband shall be implemented: (1) without a step to the droop curve, that is, once the frequency deviation exceeds the deadband parameter, the expected change in the Customer Facility's real power output in response to frequency deviations shall start from zero and then increase (for under-frequency deviations) or decrease (for over-frequency deviations) linearly in proportion to the magnitude of the frequency deviation; or (2) in accordance with an approved NERC Reliability Standard providing for an equivalent or more stringent parameter. Generation Interconnection Customer shall notify Transmission Provider that the primary frequency response capability of the Customer Facility has been tested and confirmed during commissioning. Once Generation Interconnection Customer has synchronized the Customer Facility with the Transmission System, Generation Interconnection Customer shall operate the Customer Facility consistent with the provisions specified in sections 4.7.2.1 and 4.7.2.2 of this agreement. The primary frequency response requirements contained herein shall apply to both synchronous and non-

synchronous Customer Facilities.

4.7.2.1 Governor or Equivalent Controls:

Whenever the Customer Facility is operated in parallel with the Transmission System, Generation Interconnection Customer shall operate the Customer Facility with its governor or equivalent controls in service and responsive to frequency. Generation Interconnection Customer shall: (1) in coordination with Transmission Provider and/or the relevant balancing authority, set the deadband parameter to: (1) a maximum of ±0.036 Hz and set the droop parameter to a maximum of 5 percent; or (2) implement the relevant droop and deadband settings from an approved NERC Reliability Standard that provides for equivalent or more stringent parameters. Generation Interconnection Customer shall be required to provide the status and settings of the governor or equivalent controls to Transmission Provider and/or the relevant balancing authority upon request. If Generation Interconnection Customer needs to operate the Customer Facility with its governor or equivalent controls not in service, Generation Interconnection Customer shall immediately notify Transmission Provider and the relevant balancing authority, and provide both with the following information: (1) the operating status of the governor or equivalent controls (i.e., whether it is currently out of service or when it will be taken out of service); (2) the reasons for removing the governor or equivalent controls from service; and (3) a reasonable estimate of when the governor or equivalent controls will be returned to service. Generation Interconnection Customer shall make Reasonable Efforts to return its governor or equivalent controls into service as soon as practicable. Generation Interconnection Customer shall make Reasonable Efforts to keep outages of the Customer Facility's governor or equivalent controls to a minimum whenever the Customer Facility is operated in parallel with the Transmission System.

4.7.2.2 Timely and Sustained Response:

Generation Interconnection Customer shall ensure that the Customer Facility's real power response to sustained frequency deviations outside of the deadband setting is automatically provided and shall begin immediately after frequency deviates outside of the deadband, and to the extent the Customer Facility has operating capability in the direction needed to correct the frequency deviation. Generation Interconnection Customer shall not block or otherwise inhibit the ability of the governor or equivalent controls to respond and shall ensure that the response is not inhibited, except under certain operational constraints including, but not limited to, ambient temperature limitations, physical energy limitations, outages of mechanical equipment, or regulatory requirements. The Customer Facility shall sustain the real power response at least until system frequency returns to a value within the deadband setting of the governor or equivalent controls. A Commission-approved Reliability Standard with equivalent or more stringent requirements shall supersede the above requirements.

4.7.2.3 Exemptions:

Customer Facilities that are regulated by the United States Nuclear Regulatory Commission shall be exempt from sections 4.7.2, 4.7.2.1, and 4.7.2.2 of this agreement. Customer Facilities that are behind the meter generation that is sized-to-load (i.e., the thermal load and the generation are

near-balanced in real-time operation and the generation is primarily controlled to maintain the unique thermal, chemical, or mechanical output necessary for the operating requirements of its host facility) shall be required to install primary frequency response capability in accordance with the droop and deadband capability requirements specified in section 4.7.2, but shall be otherwise exempt from the operating requirements in sections 4.7.2, 4.7.2.1, 4.7.2.2, and 4.7.2.4 of this agreement.

4.7.2.4 Energy Storage Resources:

Generation Interconnection Customer interconnecting an Energy Storage Resource shall establish an operating range in Schedule I of this ISA that specifies a minimum state of charge and a maximum state of charge between which the Energy Storage Resource will be required to provide primary frequency response consistent with the conditions set forth in sections 4.7.2, 4.7.2.1, 4.7.2.2, and 4.7.2.3 of this agreement. Schedule I shall specify whether the operating range is static or dynamic, and shall consider (1) the expected magnitude of frequency deviations in the interconnection; (2) the expected duration that system frequency will remain outside of the deadband parameter in the interconnection; (3) the expected incidence of frequency deviations outside of the deadband parameter in the interconnection; (4) the physical capabilities of the Energy Storage Resource; (5) operational limitations of the Energy Storage Resource due to manufacturer specifications; and (6) any other relevant factors agreed to by Transmission Provider and Generation Interconnection Customer, and in consultation with the relevant transmission owner or balancing authority as appropriate. If the operating range is dynamic, then Schedule I must establish how frequently the operating range will be reevaluated and the factors that may be considered during its reevaluation.

Generation Interconnection Customer's Energy Storage Resource is required to provide timely and sustained primary frequency response consistent with section 4.7.2.2 of this agreement when it is online and dispatched to inject electricity to the Transmission System and/or receive electricity from the Transmission System. This excludes circumstances when the Energy Storage Resource is not dispatched to inject electricity to the Transmission System and/or dispatched to receive electricity from the Transmission System. If Generation Interconnection Customer's Energy Storage Resource is charging at the time of a frequency deviation outside of its deadband parameter, it is to increase (for over-frequency deviations) or decrease (for under-frequency deviations) the rate at which it is charging in accordance with its droop parameter. Generation Interconnection Customer's Energy Storage Resource is not required to change from charging to discharging, or vice versa, unless the response necessitated by the droop and deadband settings requires it to do so and it is technically capable of making such a transition.

4.8 Under- and Over-Frequency and Under- and Over- Voltage Conditions:

The Generation Interconnection Customer shall ensure "frequency ride through" capability and "voltage ride through" capability of its Customer Facility. The Generation Interconnection Customer shall enable these capabilities such that its Customer Facility shall not disconnect automatically or instantaneously from the system or equipment of the Transmission Provider and any Affected Systems for a defined under-frequency or over-frequency condition, or an under-voltage or over-voltage condition, as tested pursuant to Section 1.4.4 of Appendix 2 of this

Interconnection Service Agreement. The defined conditions shall be in accordance with Good Utility Practice and consistent with any standards and guidelines that are applied to other Generating Facilities in the PJM Region on a comparable basis. The Customer Facility's protective equipment settings shall comply with the Transmission Provider's automatic load-shed program. The Transmission Provider shall review the protective equipment settings to confirm compliance with the automatic load-shed program. The term "ride through" as used herein shall mean the ability of a Customer Facility to stay connected to and synchronized with the system or equipment of the Transmission Provider and any Affected Systems during system disturbances within a range of conditions, in accordance with Good Utility Practice and consistent with any standards and guidelines that are applied to other Generating Facilities in the Balancing Authority on a comparable basis. The term "frequency ride through" as used herein shall mean the ability of a Generation Interconnection Customer's Customer Facility Customer Facility to stay connected to and synchronized with the Transmission System or equipment of the Transmission Provider and any Affected Systems during system disturbances within a range of under-frequency and over-frequency conditions, in accordance with Good Utility Practice and consistent with any standards and guidelines that are applied to other Generating Facilities in the PJM Region on a comparable basis. The term "voltage ride through" as used herein shall mean the ability of a Customer Facility to stay connected to and synchronized with the system or equipment of the Transmission Provider and any Affected Systems during system disturbances within a range of under-voltage and over-voltage conditions, in accordance with Good Utility Practice and consistent with any standards and guidelines that are applied to other Generating Facilities in the PJM Region on a comparable basis.

The Transmission System is designed to automatically activate a load-shed program as required by NERC and each Applicable Regional Entity in the event of an under-frequency system disturbance. A Generation Interconnection Customer shall implement under-frequency and over-frequency relay set points for the Customer Facility as required by NERC and each Applicable Regional Entity to ensure "frequency ride through" capability of the Transmission System. The response of a Generation Interconnection Customer's Customer Facility to frequency deviations of predetermined magnitudes, both under-frequency and over-frequency deviations shall be studied and coordinated with the Transmission Provider in accordance with Good Utility Practice.

4.9 System Protection and Power Quality

4.9.1 System Protection:

Interconnection Customer shall, at its expense, install, operate and maintain such System Protection Facilities as may be required in connection with operation of the Customer Facility and the Customer Interconnection Facilities consistent with Applicable Technical Requirements and Standards. Interconnected Transmission Owner shall install any System Protection Facilities that may be required, as determined by Transmission Provider, on the Transmission Owner Interconnection Facilities or the Transmission System in connection with the operation of the Customer Facility and the Customer Interconnection Facilities. Responsibility for the cost of any System Protection Facilities required on the Transmission Owner Interconnection Facilities or the Transmission System shall be allocated as provided in Section 217 of the Tariff.

4.9.2 Power Quality:

The Customer Facility and Customer Interconnection Facilities shall not cause excessive deviations from the power quality criteria set forth in the Applicable Technical Requirements and Standards.

4.10 Access Rights:

Each Interconnected Entity shall provide the other Interconnected Entity access to areas under its control as reasonably necessary to permit the other Interconnected Entity to perform its obligations under this Appendix 2, including operation and maintenance obligations. An Interconnected Entity that obtains such access shall comply with all safety rules applicable to the area to which access is obtained. Each Interconnected Entity agrees to inform the other Interconnected Entity's representatives of safety rules applicable to an area.

4.11 Switching and Tagging Rules:

The Interconnected Entities shall comply with applicable Switching and Tagging Rules in obtaining clearances for work or for switching operations on equipment. Such Switching and Tagging Rules shall be developed in accordance with OSHA standards codified at 29 C.F.R. Part 1910, or successor standards. Each Interconnected Entity shall provide the other Interconnected Entity a copy of its Switching and Tagging Rules that are applicable to the other Interconnected Entity's activities.

4.12 Communications and Data Protocol:

The Interconnected Entities shall comply with any communications and data protocol that the Transmission Provider may establish.

4.13 Nuclear Generating Facilities:

In the event that the Customer Facility is a nuclear Generating Facility, the Interconnection Parties shall agree to such non-standard terms and conditions as are reasonably necessary to accommodate the Interconnection Customer's satisfaction of Nuclear Regulatory Commission requirements relating to the safety and reliability of operations of such facilities.

5 Maintenance

5.1 General:

Each Interconnected Entity shall maintain, or shall cause the maintenance of, its facilities in a safe and reliable manner in accord with (i) the terms of this Appendix 2; (ii) Applicable Standards; (iii) applicable rules, procedures and protocols set forth in the Tariff and the Operating Agreement, as any or all may be amended from time to time; (iv) Applicable Laws and Regulations, and (v) Good Utility Practice.

5.2 [Reserved.]

5.3 Outage Authority and Coordination

5.3.1 Coordination:

The Interconnection Parties agree to confer regularly to coordinate the planning, scheduling and performance of preventive and corrective maintenance on the Customer Facility, the Customer Interconnection Facilities and any Attachment Facilities owned by the Interconnected Transmission Owner.

5.3.2 Authority:

Each Interconnected Entity may, in accordance with Good Utility Practice, remove from service its facilities that may affect the other Interconnected Entity's facilities in order to perform maintenance or testing or to install or replace equipment. Except in the event of an Emergency Condition, the Interconnection Customer proposing to remove such facilities from service shall provide prior notice of such activities to the Transmission Provider and the Interconnected Transmission Owner, and the Interconnected Entities shall coordinate all scheduling of planned facility outages with Transmission Provider, in accordance with applicable sections of the Operating Agreement, the PJM Manuals and any other applicable operating guidelines or directives of the Transmission Provider. Subject to the foregoing, the Interconnected Entity scheduling a facility outage shall use Reasonable Efforts to coordinate such outage with the other Interconnected Entity's scheduled outages.

5.3.3 Outages Required for Maintenance:

Subject to any necessary approval by Transmission Provider, each Interconnected Entity shall provide necessary equipment outages to allow the other Interconnected Entity to perform periodic maintenance, repair or replacement of its facilities and such outages shall be provided at mutually agreeable times, unless conditions arise which an Interconnected Entity believes, in accordance with Good Utility Practice, may endanger persons or property.

5.3.4 Rescheduling of Planned Outages:

To the extent so provided by the Tariff, the Operating Agreement, and the PJM Manuals, an Interconnected Entity may seek compensation from Transmission Provider for any costs related to rejection by Transmission Provider of a request of such Interconnected Entity for a planned maintenance outage.

5.3.5 Outage Restoration:

If an outage on an Interconnected Entity's facilities adversely affects the other Interconnected Entity's facilities, the Interconnected Entity that owns or controls the facility that is out of service shall use Reasonable Efforts to restore the facility to service promptly.

5.4 Inspections and Testing:

Each Interconnected Entity shall perform routine inspection and testing of its facilities and equipment in accordance with Good Utility Practice as may be necessary to ensure the continued interconnection of the Customer Facility with the Transmission System in a safe and reliable manner. Each Interconnected Entity shall have the right, upon advance written notice, to request reasonable additional testing of an Interconnected Entity's facilities for good cause, as may be in accordance with Good Utility Practice.

5.5 Right to Observe Testing:

Each Interconnected Entity shall notify the other Interconnected Entity in advance of its performance of tests of its portion of the Interconnection Facilities. The other Interconnected Entity shall, at its own expense, have the right, but not the obligation, to:

(a) Observe the other Party's tests and/or inspection of any of its system protection facilities and other protective equipment, including power system stabilizers;

(b) Review the settings of the other Party's system protection facilities and other protective equipment;

(c) Review the other Party's maintenance record relative to the Interconnection Facilities, system protection facilities and other protective equipment; and

(d) Exercise these rights from time to time as it deems necessary upon reasonable notice to the other Party.

5.6 Secondary Systems:

Each Interconnected Entity agrees to cooperate with the other in the inspection, maintenance, and testing of those Secondary Systems directly affecting the operation of an Interconnected Entity's facilities and equipment which may reasonably be expected to affect the other Interconnected Entity's facilities. Each Interconnected Entity shall provide advance notice to the other Interconnected Entity before undertaking any work on such equipment, especially in electrical circuits involving circuit breaker trip and close contacts, current transformers, or potential transformers.

5.7 Access Rights:

Each Interconnected Entity shall provide the other Interconnected Entity access to areas under its control as reasonably necessary to permit the other Interconnected Entity to perform its obligations under this Appendix 2, including operation and maintenance obligations. An Interconnected Entity that obtains such access shall comply with all safety rules applicable to the area to which access is obtained. Each Interconnected Entity agrees to inform the other Interconnected Entity's representatives of safety rules applicable to an area.

5.8 Observation of Deficiencies:

If an Interconnection Party observes any Abnormal Condition on, or becomes aware of a lack of scheduled maintenance and testing with respect to, an Interconnection Party's facilities and equipment that might reasonably be expected to adversely affect the observing Interconnection Party's facilities and equipment, the observing Interconnection Party shall provide prompt notice under the circumstances to the appropriate Interconnection Party, and such Interconnection Party shall consider such notice in accordance with Good Utility Practice. Any Interconnection Party's review, inspection, and approval related to the other Interconnection Party's facilities and equipment shall be limited to the purpose of assessing the safety, reliability, protection and control of the Transmission System and shall not be construed as confirming or endorsing the design of such facilities and equipment, or as a warranty of any type, including safety, durability or reliability thereof. Notwithstanding the foregoing, the observing Interconnection Party shall have no liability whatsoever for failure to give a deficiency notice to the other Interconnection Party and the Interconnected Entity that owns the relevant Interconnection Facilities shall remain fully liable for its failure to determine and correct deficiencies and defects in its facilities and equipment.

6 Emergency Operations

6.1 Obligations:

Subject to Applicable Laws and Regulations, each Interconnection Party shall comply with the Emergency Condition procedures of NERC, the Applicable Regional Entity, Transmission Provider, the Interconnected Transmission Owner and Interconnection Customer.

6.2 Notice:

Each Interconnection Party shall notify the other parties promptly when it becomes aware of an Emergency Condition that may reasonably be expected to affect operation of the Customer Facility, the Customer Interconnection Facilities, the Transmission Owner Interconnection Facilities, or the Transmission System. To the extent information is known, the notification shall describe the Emergency Condition, the extent of the damage or deficiency, the expected effect on the facilities and/or operation thereof, its anticipated duration and the corrective action taken and/or to be taken. The initial notice shall be followed as soon as practicable with written notice.

6.3 Immediate Action:

An Interconnection Party becoming aware of an Emergency Condition may take such action, including disconnection of the Customer Facility from the Transmission System, as is reasonable and necessary in accord with Good Utility Practice (i) to prevent, avoid, or mitigate injury or danger to, or loss of, life or property; (ii) to preserve the reliability of, in the case of Interconnection Customer, the Customer Facility, or, in the case of Transmission Provider or the Interconnected Transmission Owner, the Transmission System and interconnected sub-transmission and distribution facilities; or (iii) to expedite restoration of service. Unless, in

Interconnection Customer's reasonable judgment, immediate action is required to prevent imminent loss of life or property, Interconnection Customer shall obtain the consent of Transmission Provider and the Interconnected Transmission Owner prior to performing any manual switching operations at the Customer Facility or the Generation Interconnection Facilities. Each Interconnection Party shall use Reasonable Efforts to minimize the effect of its actions during an Emergency Condition on the facilities and operations of the other Interconnection Parties.

6.4 Record-Keeping Obligations:

Each Interconnection Party shall keep and maintain records of actions taken during an Emergency Condition that may reasonably be expected to affect the other parties' facilities and make such records available for audit in accordance with Section 19.3 of this Appendix 2.

7 Safety

7.1 General:

Each Interconnected Entity shall perform all work under this Appendix 2 that may reasonably be expected to affect the other Interconnected Entity in accordance with Good Utility Practice and all Applicable Laws and Regulations pertaining to the safety of persons or property. An Interconnected Entity performing work within the boundaries of the other Interconnected Entity's facilities must abide by the safety rules applicable to the site. Each party agrees to inform the other party's representatives of applicable safety rules that must be obeyed on the premises.

7.2 Environmental Releases:

Each Interconnected Entity shall notify the other Interconnection Parties, first orally and promptly thereafter in writing, of the release of any Hazardous Substances, any asbestos or lead abatement activities, or any type of remediation activities, related to the Customer Facility or the Interconnection Facilities, any of which may reasonably be expected to affect one or both of the other parties. The notifying party shall (i) provide the notice as soon as possible; (ii) make a good faith effort to provide the notice within twenty-four (24) hours after the party becomes aware of the occurrence; and (iii) promptly furnish to the other parties copies of any publicly available reports filed with any governmental agencies addressing such events.

8 Metering

8.1 General:

Interconnection Customer shall have the right to install, own, operate, test and maintain the necessary Metering Equipment. In the event that Interconnection Customer exercises this option, the Interconnected Transmission Owner shall have the right to install its own check meter(s), at its own expense, at or near the location of the Metering Equipment. If both Interconnection Customer and Interconnected Transmission Owner install meters, the meter installed by the

Interconnection Customer shall control unless it is determined by testing to be inaccurate. If the Interconnection Customer does not exercise the option provided by the first sentence of this section, the Interconnected Transmission Owner shall have the option to install, own, operate, test and maintain all necessary Metering Equipment at Interconnection Customer's expense. If the Interconnected Transmission Owner does not exercise this option, the Interconnection Customer shall install, own, operate, test and maintain all necessary Metering Equipment. Transmission Provider shall determine the location where the Metering Equipment shall be installed, after consulting with Interconnection Customer and the Interconnected Transmission Owner. All Metering Equipment shall be tested prior to any operation of the Customer Facility. Power flows to and from the Customer Facility shall be compensated to the Point of Interconnection, or, upon the mutual agreement of the Interconnected Transmission Owner and the Interconnection Customer, to another location.

8.2 Standards:

All Metering Equipment installed pursuant to this Appendix 2 to be used for billing and payments shall be revenue quality Metering Equipment and shall satisfy applicable ANSI standards and Transmission Provider's metering standards and requirements. Nothing in this Appendix 2 precludes the use of Metering Equipment for any retail services of the Interconnected Transmission Owner provided, however, that in such circumstances Applicable Laws and Regulations shall control.

8.3 Testing of Metering Equipment:

The Interconnected Entity that, pursuant to Section 8.1 of this Appendix 2, owns the Metering Equipment shall operate, maintain, inspect and test all Metering Equipment upon installation and at least once every two years thereafter. Upon reasonable request by the other Interconnected Entity, the owner of the Metering Equipment shall inspect or test the Metering Equipment more frequently than every two years, but in no event more frequently than three times in any 24-month period. The owner of the Metering Equipment shall give reasonable notice to the Interconnection Parties of the time when any inspection or test of the owner's Metering Equipment shall take place, and the other parties may have representatives present at the test or inspection. If Metering Equipment is found to be inaccurate or defective, it shall be adjusted, repaired or replaced in order to provide accurate metering. Where the Interconnected Transmission Owner owns the Metering Equipment, the expense of such adjustment, repair or replacement shall be borne by the Interconnection Customer, except that the Interconnection Customer shall not be responsible for such expenses where the inaccuracy or defect is caused by the Interconnected Transmission Owner. If Metering Equipment fails to register, or if the measurement made by Metering Equipment during a test varies by more than one percent from the measurement made by the standard meter used in the test, the owner of the Metering Equipment shall inform Transmission Provider, and the Transmission Provider shall inform the other Interconnected Entity, of the need to correct all measurements made by the inaccurate meter for the period during which the inaccurate measurements were made, if the period can be determined. If the period of inaccurate measurement cannot be determined, the correction shall be for the period immediately preceding the test of the Metering Equipment that is equal to one-

half of the time from the date of the last previous test of the Metering Equipment, provided that the period subject to correction shall not exceed nine (9) months.

8.4 Metering Data:

At Interconnection Customer's expense, the metered data shall be telemetered (a) to a location designated by Transmission Provider; (b) to a location designated by the Interconnected Transmission Owner, unless the Interconnected Transmission Owner agrees otherwise; and (c) to a location designated by Interconnection Customer. Data from the Metering Equipment at the Point of Interconnection shall be used, under normal operating conditions, as the official measurement of the amount of energy delivered from or to the Customer Facility to the Point of Interconnection, provided that the Transmission Provider's rules applicable to Station Power as set forth at Tariff, Attachment K-Appendix, section 1.7.10(d) shall control with respect to a Generation Interconnection Customer's consumption of Station Power.

8.5 Communications

8.5.1 Interconnection Customer Obligations:

Interconnection Customer shall install and maintain satisfactory operating communications with Transmission Provider's system dispatcher or its other designated representative and with the Interconnected Transmission Owner. Interconnection Customer shall provide standard voice line, dedicated voice line and facsimile communications at its Customer Facility control room through use of the public telephone system. Interconnection Customer also shall provide and maintain backup communication links with both Transmission Provider and Interconnected Transmission Owner for use during abnormal conditions as specified by Transmission Provider and Interconnected Transmission Owner, respectively. Interconnection Customer further shall provide the dedicated data circuit(s) necessary to provide Interconnection Customer data to the Transmission Provider and Interconnected Transmission Owner as necessary to conform with Applicable Technical Requirements and Standards.

8.5.2 Remote Terminal Unit:

Unless otherwise deemed unnecessary by Transmission Provider and Interconnected Transmission Owner, as indicated in the Interconnection Service Agreement, prior to any operation of the Customer Facility, a remote terminal unit, or equivalent data collection and transfer equipment acceptable to the Interconnection Parties, shall be installed by Interconnection Customer, or by the Interconnected Transmission Owner at Interconnection Customer's expense, to gather accumulated and instantaneous data to be telemetered to the location(s) designated by Transmission Provider and Interconnected Transmission Owner through use of a dedicated point-to-point data circuit(s) as indicated in Section 8.5.1 of this Appendix 2. Instantaneous, bi-directional real power and, with respect to a Generation Interconnection Customer's Customer Facility, reactive power flow information, must be telemetered directly to the location(s) specified by Transmission Provider and the Interconnected Transmission Owner.

8.5.3. Phasor Measurement Units (PMUs):

An Interconnection Customer entering the New Services Queue on or after October 1, 2012 with a proposed new Customer Facility that has a Maximum Facility Output equal to or greater than 100 MW shall install and maintain, at its expense, phasor measurement units (PMUs). PMUs shall be installed on the Customer Facility low side of the generator step-up transformer, unless it is a non-synchronous generation facility, in which case the PMUs shall be installed on the Customer Facility side of the Point of Interconnection. The PMUs must be capable of performing phasor measurements at a minimum of 30 samples per second which are synchronized via a high-accuracy satellite clock. To the extent Interconnection Customer installs similar quality equipment, such as relays or digital fault recorders, that can collect data at least at the same rate as PMUs and which data is synchronized via a high-accuracy satellite clock, such equipment would satisfy this requirement. As provided for in the PJM Manuals, an Interconnection Customer shall be required to install and maintain, at its expense, PMU equipment which includes the communication circuit capable of carrying the PMU data to a local data concentrator, and then transporting the information continuously to the Transmission Provider; as well as store the PMU data locally for thirty days. Interconnection Customer shall provide to Transmission Provider all necessary and requested information through the Transmission Provider synchrophasor system, including the following: (a) gross MW and MVAR measured at the Customer Facility side of the generator step-up transformer (or, for a non-synchronous generation facility, to be measured at the Customer Facility side of the Point of Interconnection); (b) generator terminal voltage; (c) generator terminal frequency; and (d) generator field voltage and current, where available. The Transmission Provider will install and provide for the ongoing support and maintenance of the network communications linking the data concentrator to the Transmission Provider. Additional details regarding the requirements and guidelines of PMU data and telecommunication of such data are contained in the PJM Manuals.

9 Force Majeure

9.1 Notice:

An Interconnection Party that is unable to carry out an obligation imposed on it by this Appendix 2 due to Force Majeure shall notify the other parties in writing or by telephone within a reasonable time after the occurrence of the cause relied on.

9.2 Duration of Force Majeure:

An Interconnection Party shall not be responsible, or considered to be in Breach or Default under this Interconnection Service Agreement, for any non-performance, any interruption or failure of service, deficiency in the quality or quantity of service, or any other failure to perform any obligation hereunder to the extent that such failure or deficiency is due to Force Majeure. An Interconnection Party shall be excused from whatever performance is affected only for the duration of the Force Majeure and while the Interconnection Party exercises Reasonable Efforts to alleviate such situation. As soon as the non-performing Interconnection Party is able to resume performance of its obligations excused because of the occurrence of Force Majeure, such Interconnection Party shall resume performance and give prompt notice thereof to the other parties.

9.3 Obligation to Make Payments:

Any Interconnection Party's obligation to make payments for services shall not be suspended by Force Majeure.

9.4 Definition of Force Majeure:

For the purposes of this section, an event of force majeure shall mean any cause beyond the control of the affected Interconnection Party or Construction Party, including but not restricted to, acts of God, flood, drought, earthquake, storm, fire, lightning, epidemic, war, riot, civil disturbance or disobedience, labor dispute, labor or material shortage, sabotage, acts of public enemy, explosions, orders, regulations or restrictions imposed by governmental, military, or lawfully established civilian authorities, which, in any of the foregoing cases, by exercise of due diligence such party could not reasonably have been expected to avoid, and which, by the exercise of due diligence, it has been unable to overcome. Force majeure does not include (i) a failure of performance that is due to an affected party's own negligence or intentional wrongdoing; (ii) any removable or remediable causes (other than settlement of a strike or labor dispute) which an affected party fails to remove or remedy within a reasonable time; or (iii) economic hardship of an affected party.

10 Charges

10.1 Specified Charges:

If and to the extent required by the Interconnected Transmission Owner, after the Initial Operation of the Customer Facility, Interconnection Customer shall pay one or more of the types of recurring charges described in this section to compensate the Interconnected Transmission Owner for costs incurred in performing certain of its obligations under this Appendix 2. All such charges shall be stated in Schedule E of the Interconnection Service Agreement. Interconnected Transmission Owner shall provide Transmission Provider and Interconnection Customer with appropriate cost data, schedules and/or written testimony in support of any charges under this section in such manner and at such time as to allow Transmission Provider to include such materials in its filing of the Interconnection Service Agreement with the FERC. Transmission Provider will deliver a copy of such filing to Interconnection Customer. Permissible charges under this section may include:

(a) Administration Charge — Any such charge may recover only the costs and expenses incurred by the Interconnected Transmission Owner in connection with administrative obligations such as the preparation of bills, the processing of Customer Facility-specific data on energy delivered at the Point of Interconnection and costs incurred in similar types of administrative processes related to Interconnection Customer's Interconnection Service. An Administration Charge shall not be permitted to the extent that the Interconnected Transmission Owner's other charges to the Interconnection Customer under the same Interconnection Service Agreement include an allocation of Interconnected Transmission Owner's administrative and general expenses and/or other corporate overhead costs.

(b) Metering Charge — Any such charge may recover only the Interconnected Transmission Owner's costs and expenses associated with operation, maintenance, inspection, testing, and carrying or capital replacement charges for any Metering Equipment that is owned by the Interconnected Transmission Owner.

(c) Telemetering Charge — Any such charge may recover only the Interconnected Transmission Owner's costs and expenses associated with operation, maintenance, inspection, testing, and carrying or capital replacement charges for any telemetering equipment that is owned by the Interconnected Transmission Owner and that is used exclusively in conjunction with Interconnection Service for the Interconnection Customer.

(d) Customer Facility Operations and Maintenance Charge — Any such charge may recover only the Interconnected Transmission Owner's costs and expenses associated with operation, maintenance, inspection, testing, modifications, taxes and carrying or capital replacement charges for Attachment Facilities related to the Interconnection Customer's Interconnection Service and that are owned by the Interconnected Transmission Owner, provided that

(i) any such charge shall exclude costs and expenses associated with Transmission Owner Interconnection Facilities owned by the Interconnected Transmission Owner that are radial line facilities that serve load in addition to an Interconnection Customer; and

(ii) except as otherwise provided by Applicable Laws and Regulations, any such charge may include only an allocated share, derived in accordance with the allocations contained in the Facilities Study, of costs and expenses associated with Transmission Owner Interconnection Facilities owned by the Interconnected Transmission Owner that are radial line facilities that serve more than one Interconnection Customer. At the discretion of the affected Interconnected Entities, a Customer Facility Operations and Maintenance Charge authorized under this section may apply on a per-incident basis or on a monthly or other periodic basis.

(e) Other Charges — Any other charges applicable to the Interconnection Customer, as mutually agreed upon by the Interconnection Customer and the Interconnected Transmission Owner and as accepted by the FERC as part of an Interconnection Service Agreement.

10.2 FERC Filings:

To the extent required by law or regulation, each Interconnection Party shall seek FERC acceptance or approval of its respective charges or the methodology for the calculation of such charges.

11 Security, Billing And Payments

11.1 Recurring Charges Pursuant to Section 10:

The following provisions shall apply with respect to recurring charges applicable to Interconnection Service after Initial Operation of the Customer Facility pursuant to Section 10 of this Appendix 2.

11.1.1 General:

Except as, and to the extent, otherwise provided in the Interconnection Service Agreement, billing and payment of any recurring charges applicable to Interconnection Service after Initial Operation of the Customer Facility pursuant to Section 10 of this Appendix 2 shall be in accordance with Section 7 of the Tariff. The Interconnected Transmission Owner shall provide Transmission Provider with all necessary information and supporting data that Transmission Provider may reasonably require to administer billing for and payment of applicable charges under this Appendix 2. Transmission Provider shall remit to the Interconnected Transmission Owner revenues received in payment of Interconnected Transmission Owner's charges to Interconnection Customer under this Appendix 2 upon Transmission Provider's receipt of such revenues. At Transmission Provider's reasonable discretion, charges to Interconnection Customer and remittances to Interconnected Transmission Owner under this Appendix 2 may be netted against other amounts owed by or to such parties under the Tariff.

11.1.2 Billing Disputes:

In the event of a billing dispute between Transmission Provider and Interconnection Customer, Transmission Provider shall continue to provide interconnection service under this Appendix 2 as long as Interconnection Customer (i) continues to make all payments not in dispute, and (ii) pays to Transmission Provider or into an independent escrow account the portion of the invoice in dispute, pending resolution of such dispute. If Interconnection Customer fails to meet these two requirements for continuation of service, then Transmission Provider shall so inform the Interconnection Parties and may provide notice to Interconnection Customer of a Breach pursuant to Section 15 of this Appendix 2. Within thirty days after the resolution of the dispute, the Interconnection Party that owes money to the other Interconnection Party shall pay the amount due with interest calculated in accord with Section 11.4.

11.2 Costs for Transmission Owner Interconnection Facilities:

The following provisions shall apply with respect to charges for the Costs of the Interconnected Transmission Owner for which the Interconnection Customer is responsible.

11.2.1 Adjustments to Security:

The Security provided by Interconnection Customer at or before execution of the Interconnection Service Agreement (a) shall be reduced as portions of the work are completed, and/or (b) shall be increased or decreased as required to reflect adjustments to Interconnection Customer's cost responsibility, as determined in accordance with Section 217, to correspond with changes in the Scope of Work developed in accordance with Transmission Provider's scope change process for interconnection projects set forth in the PJM Manuals.

11.2.2 Invoice:

The Interconnected Transmission Owner shall provide Transmission Provider a quarterly statement of the Interconnected Transmission Owner's scheduled expenditures during the next three months for, as applicable (a) the design, engineering and construction of, and/or for other charges related to, construction of the Interconnection Facilities for which the Interconnected Transmission Owner is responsible under the Interconnection Service Agreement and the Interconnection Construction Service Agreement, or (b) in the event that the Interconnection Customer exercises the Option to Build pursuant to Tariff, Attachment P, Appendix 2, section 3.2.3.1, for the Interconnected Transmission Owner's oversight costs (i.e. costs incurred by the Transmission Owner when engaging in oversight activities to satisfy itself that the Interconnection Customer is complying with the Transmission Owner's standards and specifications for the construction of facilities) associated with Interconnection Customer's building Transmission Owner Attachment Facilities and Direct Connection Network Upgrades, including but not limited to Costs for tie-in work and Cancellation Costs. Interconnected Transmission Owner oversight costs shall be consistent with Tariff, Attachment P, Appendix 2, section 3.2.3.2(a)(12). Transmission Provider shall bill Interconnection Customer on behalf of the Interconnected Transmission Owner, for the Interconnected Transmission Owner's expected Costs during the subsequent three months. Interconnection Customer shall pay each bill within twenty (20) days after receipt thereof. Upon receipt of each of Interconnection Customer's payments of such bills, Transmission Provider shall reimburse the Interconnected Transmission Owner. Interconnection Customer may request that the Transmission Provider provide a quarterly cost reconciliation. Such a quarterly cost reconciliation will have a one-quarter lag, e.g., reconciliation of Costs for the first calendar quarter of work will be provided at the start of the third calendar quarter of work, provided, however, that Section 11.2.3 of this Appendix 2 shall govern the timing of the final cost reconciliation upon completion of the work.

11.2.3 Final Invoice:

Within 120 days after the Interconnected Transmission Owner completes construction and installation of the Interconnection Facilities for which the Interconnected Transmission Owner is responsible under the Interconnection Service Agreement and the Interconnection Construction Service Agreement, Transmission Provider shall provide Interconnection Customer with an accounting of, and the appropriate Construction Party shall make any payment to the other that is necessary to resolve, any difference between (a) Interconnection Customer's responsibility under the Tariff for the actual Cost of such facilities, and (b) Interconnection Customer's previous aggregate payments to Transmission Provider for the Costs of such facilities. Notwithstanding the foregoing, however, Transmission Provider shall not be obligated to make any payment to either the Interconnection Customer or the Interconnected Transmission Owner that the preceding sentence requires it to make unless and until the Transmission Provider has received the payment that it is required to refund from the Construction Party owing the payment.

11.2.4 Disputes:

In the event of a billing dispute between any of the Construction Parties, Transmission Provider and the Interconnected Transmission Owner shall continue to perform their respective

obligations pursuant to this Interconnection Service Agreement and any related Interconnection Construction Service Agreements so long as (a) Interconnection Customer continues to make all payments not in dispute, and (b) the Security held by the Transmission Provider while the dispute is pending exceeds the amount in dispute, or (c) Interconnection Customer pays to Transmission Provider or into an independent escrow account the portion of the invoice in dispute, pending resolution of such dispute. If Interconnection Customer fails to meet any of these requirements, then Transmission Provider shall so inform the other Construction Parties and Transmission Provider or the Interconnected Transmission Owner may provide notice to Interconnection Customer of a Breach pursuant to Section 15 of this Appendix 2.

11.3 No Waiver:

Payment of an invoice shall not relieve Interconnection Customer from any other responsibilities or obligations it has under this Appendix 2, nor shall such payment constitute a waiver of any claims arising hereunder.

11.4 Interest:

Interest on any unpaid amounts shall be calculated in accordance with the methodology specified for interest on refunds in the FERC's regulations at 18 C.F.R. § 35.19a(a)(2)(iii). Interest on delinquent amounts shall be calculated from the due date of the bill to the date of payment.

12.0 Assignment

12.1 Assignment with Prior Consent:

Except as provided in Section 12.2 to this Appendix 2, no Interconnection Party shall assign its rights or delegate its duties, or any part of such rights or duties, under the Interconnection Service Agreement without the written consent of the other Interconnection Parties, which consent shall not be unreasonably withheld, conditioned, or delayed. Any such assignment or delegation made without such written consent shall be null and void. An Interconnection Party may make an assignment in connection with the sale, merger, or transfer of a substantial portion or all of its properties including the Interconnection Facilities which it owns, so long as the assignee in such a sale, merger, or transfer assumes in writing all rights, duties and obligations arising under this Interconnection Service Agreement. In addition, the Interconnected Transmission Owner shall be entitled, subject to Applicable Laws and Regulations, to assign the Interconnection Service Agreement to any Affiliate or successor that owns and operates all or a substantial portion of the Interconnected Transmission Owner’s transmission facilities.

12.2 Assignment Without Prior Consent

12.2.1 Assignment to Owners:

Interconnection Customer may assign the Interconnection Service Agreement without the Interconnected Transmission Owner’s or Transmission Provider’s prior consent to any Affiliate or person that purchases or otherwise acquires, directly or indirectly, all or substantially all of the

Customer Facility and the Customer Interconnection Facilities, provided that prior to the effective date of any such assignment, the assignee shall demonstrate that, as of the effective date of the assignment, the assignee has the technical and operational competence to comply with the requirements of this Interconnection Service Agreement and assumes in a writing provided to the Interconnected Transmission Owner and Transmission Provider all rights, duties, and obligations of Interconnection Customer arising under this Interconnection Service Agreement. However, any assignment described herein shall not relieve or discharge the Interconnection Customer from any of its obligations hereunder absent the written consent of the Transmission Provider, such consent not to be unreasonably withheld, conditioned or delayed.

12.2.2 Assignment to Lenders:

Interconnection Customer may, without the consent of the Transmission Provider or the Interconnected Transmission Owner, assign the Interconnection Service Agreement to any Project Finance Entity(ies), provided that such assignment does not alter or diminish Interconnection Customer's duties and obligations under this Interconnection Service Agreement. If Interconnection Customer provides the Interconnected Transmission Owner with notice of an assignment to any Project Finance Entity(ies) and identifies such Project Finance Entities as contacts for notice purposes pursuant to Section 21 of this Appendix 2, the Transmission Provider or Interconnected Transmission Owner shall provide notice and reasonable opportunity for such entity(ies) to cure any Breach under this Interconnection Service Agreement in accordance with this Interconnection Service Agreement. Transmission Provider or Interconnected Transmission Owner shall, if requested by such lenders, provide such customary and reasonable documents, including consents to assignment, as may be reasonably requested with respect to the assignment and status of the Interconnection Service Agreement, provided that such documents do not alter or diminish the rights of the Transmission Provider or Interconnected Transmission Owner under this Interconnection Service Agreement, except with respect to providing notice of Breach to a Project Finance Entity. Upon presentation of the Transmission Provider and/or the Interconnected Transmission Owner's invoice therefor, Interconnection Customer shall pay the Transmission Provider and/or the Interconnected Transmission Owner's reasonable documented cost of providing such documents and certificates. Any assignment described herein shall not relieve or discharge the Interconnection Customer from any of its obligations hereunder absent the written consent of the Interconnected Transmission Owner and Transmission Provider.

12.3 Successors and Assigns:

This Interconnection Service Agreement and all of its provisions are binding upon, and inure to the benefit of, the Interconnection Parties and their respective successors and permitted assigns.

13 Insurance

13.1 Required Coverages For Generation Resources Of More Than 20 Megawatts or Merchant Transmission Facilities:

Each Interconnected Entity shall maintain insurance as described in paragraphs (a) through (e) below. All insurance shall be procured from insurance companies rated "A-," VII or better by AM Best and authorized to do business in a state or states in which the Interconnection Facilities are located. Failure to maintain required insurance shall be a Breach of the Interconnection Service Agreement.

(a) Workers Compensation insurance with statutory limits, as required by the state and/or jurisdiction in which the work is to be performed, and employer's liability insurance with limits of not less than one million dollars ($1,000,000).

(b) Commercial General Liability Insurance and/or Excess Liability Insurance covering liability arising out of premises, operations, personal injury, advertising , products and completed operations coverage, independent contractors coverage, liability assumed under an insured contract, coverage for pollution to the extent normally available and punitive damages to the extent allowable under applicable law, with limits of not less than one million dollars ($1,000,000) per occurrence/one million dollars ($1,000,000) general aggregate/one million dollars ($1,000,000) products and completed operations aggregate.

(c) Business/Commercial Automobile Liability Insurance for coverage of owned and non-owned and hired vehicles, trailers or semi-trailers designed for travel on public roads, with a minimum, combined single limit of one million dollars ($1,000,000) each accident for bodily injury, including death, and property damage.

(d) Excess and/or Umbrella Liability Insurance with a limit of liability of not less than twenty million dollars ($20,000,000) per occurrence. These limits apply in excess of the employer's liability, commercial general liability and business/commercial automobile liability coverages described above. This requirement can be met alone or via a combination of primary, excess and/or umbrella insurance.

(e) Professional Liability Insurance providing errors, omissions and/or malpractice coverage in the amount of five million dollars ($5,000,000) per occurrence/aggregate. Coverage shall be provided for the Interconnected Entity's duties, responsibilities and performance outlined in this Appendix 2, the Interconnection Service Agreement, and if applicable, the Interconnection Construction Service Agreement.

An Interconnected Entity may meet the Professional Liability Insurance requirements by requiring third-party contractors, designers, or engineers, or other parties that are responsible for design work associated with the transmission facilities or Interconnection Facilities necessary for the interconnection to procure professional liability insurance in the amounts and upon the terms prescribed by this section 13.1(e), and providing evidence of such insurance to the other Interconnected Entity. Such insurance shall be procured from companies rated "A-," VII or better by AM Best and authorized to do business in a state or states in which the Interconnection Facilities are located. Nothing in this section relieves the Interconnected Entity from complying with the insurance requirements. In the event that the policies of the designers, engineers, or other parties used to satisfy the Interconnected Entity's insurance obligations under this section become invalid for any reason, including but not limited to, (i) the policy(ies) lapsing or

otherwise terminating or expiring; (ii) the coverage limits of such policy(ies) are decreased; or (iii) the policy(ies) do not comply with the terms and conditions of the Tariff; Interconnected Entity shall be required to procure insurance sufficient to meet the requirements of this section, such that there is no lapse in insurance coverage. Notwithstanding the foregoing, in the event an Interconnected Entity will not design or construct or cause to design or construct any new transmission facilities or Interconnection Facilities, Transmission Provider, in its discretion, may waive the requirement that an Interconnected Entity maintain the Professional Liability Insurance pursuant to this section.

13.1A. Required Coverages For Generation Resources Of 20 Megawatts Or Less:

Each Interconnected Entity shall maintain the types of insurance as described in section 13.1 paragraphs (a) through (e) in an amount sufficient to insure against all reasonably foreseeable direct liabilities given the size and nature of the generating equipment being interconnected, the interconnection itself, and the characteristics of the system to which the interconnection is made. Additional insurance may be required by the Interconnection Customer, as a function of owning and operating a Generating Facility. All insurance shall be procured from insurance companies rated "A-," VII or better by AM Best and authorized to do business in a state or states in which the Interconnection Facilities are located. Failure to maintain required insurance shall be a Breach of the Interconnection Service Agreement.

13.2 Additional Insureds:

The Commercial General Liability, Business/Commercial Automobile Liability and Excess and/or Umbrella Liability policies procured by each Interconnected Entity (the "Insuring Interconnected Entity") shall include each other Interconnection Party (the "Insured Interconnection Party"), and its respective officers, agents and employees as additional insureds, providing all standard coverages and covering liability of the Insured Interconnection Party arising out of bodily injury and/or property damage (including loss of use) in any way connected with the operations, performance, or lack of performance under this Interconnection Service Agreement.

13.3 Other Required Terms:

The above-mentioned insurance policies (except workers' compensation) shall provide the following:

(a) Each policy shall contain provisions that specify that it is primary and non contributory for any liability arising out of that party's negligence, and shall apply to such extent without consideration for other policies separately carried and shall state that each insured is provided coverage as though a separate policy had been issued to each, except the insurer's liability shall not be increased beyond the amount for which the insurer would have been liable had only one insured been covered. Each Insuring Interconnected Entity shall be responsible for its respective deductibles or retentions.

(b) If any coverage is written on a Claims First Made Basis, continuous coverage shall be maintained or an extended discovery period will be exercised for a period of not less than two (2) years after termination of the Interconnection Service Agreement.

(c) Provide for a waiver of all rights of subrogation which the Insuring Interconnected Entity's insurance carrier might exercise against the Insured Interconnection Party.

13.3A No Limitation of Liability:

The requirements contained herein as to the types and limits of all insurance to be maintained by the Interconnected Entities are not intended to and shall not in any manner, limit or qualify the liabilities and obligations assumed by the Interconnection Parties under the Interconnection Service Agreement.

13.4 Self-Insurance:

Notwithstanding the foregoing, each Interconnected Entity may self-insure to meet the minimum insurance requirements of this Section 13 of this Appendix 2 to the extent it maintains a self-insurance program, provided that such Interconnected Entity's senior secured debt is rated at investment grade or better by Standard & Poor's and its self-insurance program meets the minimum insurance requirements of this Section 13. For any period of time that an Interconnected Entity's senior secured debt is unrated by Standard & Poor's or is rated at less than investment grade by Standard & Poor's, such Party shall comply with the insurance requirements applicable to it under this Section 13. In the event that an Interconnected Entity is permitted to self-insure pursuant to this section, it shall notify the other Interconnection Parties that it meets the requirements to self-insure and that its self-insurance program meets the minimum insurance requirements in a manner consistent with that specified in Section 13.5 of this Appendix 2.

13.5 Notices; Certificates of Insurance:

All policies of insurance shall provide for thirty days prior written notice of cancellation or material adverse change. If the policies of insurance do not or cannot be endorsed to provide thirty days prior notice of cancellation or material adverse change, each Interconnected Entity shall provide the other Interconnected Entities with thirty days prior written notice of cancellation or material adverse change to any of the insurance required in this agreement. Each Interconnected Entity shall provide the other with certificates of insurance prior to Initial Operation of the Customer Facility and thereafter at such time intervals as they shall mutually agree upon, provided that such interval shall not be less than one year. All certificates of insurance shall indicate that the certificate holder is included as an additional insured under the Commercial General Liability, Business/Commercial Automobile Liability and Excess and/or Umbrella Liability coverages, and that this insurance is primary with a waiver of subrogation included in favor of the other Interconnected Entities.

13.6 Subcontractor Insurance:

In accord with Good Utility Practice, each Interconnected Entity shall require each of its subcontractors to maintain and provide evidence of insurance coverage of types, and in amounts, commensurate with the risks associated with the services provided by the subcontractor. Bonding of contractors or subcontractors shall be at the hiring Interconnected Entity's discretion, but regardless of bonding, the hiring principal shall be responsible for the performance or non-performance of any contractor or subcontractor it hires.

13.7 Reporting Incidents

The Interconnection Parties shall report to each other in writing as soon as practical all accidents or occurrences resulting in injuries to any person, including death, and any property damage arising out of the Interconnection Service Agreement.

14 Indemnity

14.1 Indemnity:

Each Interconnection Party shall indemnify and hold harmless the other Interconnection Parties, and the other Interconnection Parties' officers, shareholders, stakeholders, members, managers, representatives, directors, agents and employees, and Affiliates, from and against any and all loss, liability, damage, cost or expense to third parties, including damage and liability for bodily injury to or death of persons, or damage to property or persons (including reasonable attorneys' fees and expenses, litigation costs, consultant fees, investigation fees, sums paid in settlements of claims, penalties or fines imposed under Applicable Laws and Regulations, and any such fees and expenses incurred in enforcing this indemnity or collecting any sums due hereunder) (collectively, "Loss") to the extent arising out of, in connection with, or resulting from (i) the indemnifying Interconnection Party's breach of any of the representations or warranties made in, or failure of the indemnifying Interconnection Party or any of its subcontractors to perform any of its obligations under, this Interconnection Service Agreement (including Appendix 2), or (ii) the negligence or willful misconduct of the indemnifying Interconnection Party or its contractors; provided, however, that no Interconnection Party shall have any indemnification obligations under this Section 14.1 in respect of any Loss to the extent the Loss results from the negligence or willful misconduct of the Interconnection Party seeking indemnity.

14.2 Indemnity Procedures:

Promptly after receipt by a Person entitled to indemnity ("Indemnified Person") of any claim or notice of the commencement of any action or administrative or legal proceeding or investigation as to which the indemnity provided for in Section 14.1 may apply, the Indemnified Person shall notify the indemnifying Interconnection Party of such fact. Any failure of or delay in such notification shall not affect an Interconnection Party's indemnification obligation unless such failure or delay is materially prejudicial to the indemnifying Interconnection Party. The Indemnified Person shall cooperate with the indemnifying Interconnection Party with respect to the matter for which indemnification is claimed. The indemnifying Interconnection Party shall have the right to assume the defense thereof with counsel designated by such indemnifying

Interconnection Party and reasonably satisfactory to the Indemnified Person. If the defendants in any such action include one or more Indemnified Persons and the indemnifying Interconnection Party and if the Indemnified Person reasonably concludes that there may be legal defenses available to it and/or other Indemnified Persons which are different from or additional to those available to the indemnifying Interconnection Party, the Indemnified Person shall have the right to select separate counsel to assert such legal defenses and to otherwise participate in the defense of such action on its own behalf. In such instances, the indemnifying Interconnection Party shall only be required to pay the fees and expenses of one additional attorney to represent an Indemnified Person or Indemnified Persons having such differing or additional legal defenses. The Indemnified Person shall be entitled, at its expense, to participate in any action, suit or proceeding, the defense of which has been assumed by the indemnifying Interconnection Party. Notwithstanding the foregoing, the indemnifying Interconnection Party (i) shall not be entitled to assume and control the defense of any such action, suit or proceedings if and to the extent that, in the opinion of the Indemnified Person and its counsel, such action, suit or proceeding involves the potential imposition of criminal liability on the Indemnified Person, or there exists a conflict or adversity of interest between the Indemnified Person and the indemnifying Interconnection Party, in such event the indemnifying Interconnection Party shall pay the reasonable expenses of the Indemnified Person, and (ii) shall not settle or consent to the entry of any judgment in any action, suit or proceeding without the consent of the Indemnified Person, which shall not be unreasonably withheld, conditioned or delayed.

14.3 Indemnified Person:

If an Indemnified Person is entitled to indemnification under this Section 14 as a result of a claim by a third party, and the indemnifying Interconnection Party fails, after notice and reasonable opportunity to proceed under Section 14.2 of this Appendix 2, to assume the defense of such claim, such Indemnified Person may at the expense of the indemnifying Interconnection Party contest, settle or consent to the entry of any judgment with respect to, or pay in full, such claim.

14.4 Amount Owing:

If an indemnifying Interconnection Party is obligated to indemnify and hold any Indemnified Person harmless under this Section 14, the amount owing to the Indemnified Person shall be the amount of such Indemnified Person's actual Loss, net of any insurance or other recovery.

14.5 Limitation on Damages:

Except as otherwise provided in this Section 14, the liability of an Interconnection Party under this Appendix 2 shall be limited to direct actual damages, and all other damages at law are waived. Under no circumstances shall any Interconnection Party or its Affiliates, directors, officers, employees and agents, or any of them, be liable to another Interconnection Party, whether in tort, contract or other basis in law or equity for any special, indirect punitive, exemplary or consequential damages, including lost profits. The limitations on damages specified in this Section 14.5 are without regard to the cause or causes related thereto, including the negligence of any Interconnection Party, whether such negligence be sole, joint or concurrent, or active or passive. This limitation on damages shall not affect any Interconnection

Party's rights to obtain equitable relief as otherwise provided in this Appendix 2. The provisions of this Section 14.5 shall survive the termination or expiration of the Interconnection Service Agreement.

14.6 Limitation of Liability in Event of Breach:

An Interconnection Party ("Breaching Party") shall have no liability hereunder to the other Interconnection Parties, and the other Interconnection Parties hereby release the Breaching Party, for all claims or damages that either of them incurs that are associated with any interruption in the availability of the Customer Facility, Interconnection Facilities, Transmission System or Interconnection Service or damages to an Interconnection Party's facilities, except to the extent such interruption or damage is caused by the Breaching Party's gross negligence or willful misconduct in the performance of its obligations under this Interconnection Service Agreement (including Appendix 2).

14.7 Limited Liability in Emergency Conditions:

Except as otherwise provided in the Tariff or the Operating Agreement, no Interconnection Party shall be liable to any other Interconnection Party for any action that it takes in responding to an Emergency Condition, so long as such action is made in good faith, is consistent with Good Utility Practice and is not contrary to the directives of the Transmission Provider or of the Interconnected Transmission Owner with respect to such Emergency Condition. Notwithstanding the above, Interconnection Customer shall be liable in the event that it fails to comply with any instructions of Transmission Provider or the Interconnected Transmission Owner related to an Emergency Condition.

15 Breach, Cure And Default

15.1 Breach:

A Breach of this Interconnection Service Agreement shall include:

(a) The failure to pay any amount when due;

(b) The failure to comply with any material term or condition of this Appendix 2 or of the other portions of the Interconnection Service Agreement, including but not limited to any material breach of a representation, warranty or covenant (other than in subsections (a) and (c)-(e) of this Section) made in this Appendix 2;

(c) Assignment of the Interconnection Service Agreement in a manner inconsistent with its terms;

(d) Failure of an Interconnection Party to provide access rights, or an Interconnection Party's attempt to revoke or terminate access rights, that are provided under this Appendix 2; or

(e) Failure of an Interconnection Party to provide information or data required to be provided under this Appendix 2 to another Interconnection Party for such other Interconnection Party to satisfy its obligations under this Appendix 2.

15.2 Continued Operation:

In the event of a Breach or Default by either Interconnected Entity, and subject to termination of the Interconnection Service Agreement under Section 16 of this Appendix 2, the Interconnected Entities shall continue to operate and maintain, as applicable, such DC power systems, protection and Metering Equipment, telemetering equipment, SCADA equipment, transformers, Secondary Systems, communications equipment, building facilities, software, documentation, structural components, and other facilities and appurtenances that are reasonably necessary for Transmission Provider and the Interconnected Transmission Owner to operate and maintain the Transmission System and the Transmission Owner Interconnection Facilities and for Interconnection Customer to operate and maintain the Customer Facility and the Customer Interconnection Facilities, in a safe and reliable manner.

15.3 Notice of Breach:

An Interconnection Party not in Breach shall give written notice of an event of Breach to the Breaching Party, to Transmission Provider and to other persons that the Breaching Party identifies in writing to the other Interconnection Party in advance. Such notice shall set forth, in reasonable detail, the nature of the Breach, and where known and applicable, the steps necessary to cure such Breach. In the event of a Breach by Interconnection Customer, Transmission Provider and the Interconnected Transmission Owner agree to provide notice of such Breach, at the same time and in the same manner as its notice to Interconnection Customer, to any Project Finance Entity provided that the Interconnection Customer has provided the notifying Interconnection Party with notice of an assignment to such Project Finance Entity(ies) and identifies such Project Finance Entity(ies) as contacts for notice purposes pursuant to Section 21 of this Appendix 2.

15.4 Cure and Default:

An Interconnection Party that commits a Breach and does not take steps to cure the Breach pursuant to this Section 15.4 is in Default of this Appendix 2 and of the Interconnection Service Agreement.

15.4.1 Cure of Breach:

Except for the event of Breach set forth in Section 15.1(a) above, the Breaching Interconnection Party (a) may cure the Breach within thirty days from the receipt of such notice; or (b) if the Breach cannot be cured within thirty (30) days, may commence in good faith all steps that are reasonable and appropriate to cure the Breach within such thirty day time period and thereafter diligently pursue such action to completion. In an event of Breach set forth in Section 15.1(a), the Breaching Interconnection Party may cure the Breach within five (5) days from the receipt of notice of the Breach.

15.5 Right to Compel Performance:

Notwithstanding the foregoing, upon the occurrence of an event of Default, a non-Defaulting Interconnection Party shall be entitled to (a) commence an action to require the Defaulting Interconnection Party to remedy such Default and specifically perform its duties and obligations hereunder in accordance with the terms and conditions hereof, (b) withhold payments, (c) suspend performance hereunder, and (d) exercise such other rights and remedies as it may have in equity or at law; provided, however, that the Transmission Provider shall not terminate the Interconnection Service Agreement due to the failure of Interconnection Customer to make a payment hereunder unless such failure could reasonably be expected to have a material adverse effect on the Interconnected Transmission Owner.

15.6 Remedies Cumulative:

Subject to Section 20.1, no remedy conferred by any provision of this Appendix 2 is intended to be exclusive of any other remedy and each and every remedy shall be cumulative and shall be in addition to every other remedy given hereunder or now or hereafter existing at law or in equity or by statute or otherwise. The election of any one or more remedies shall not constitute a waiver of the right to pursue other available remedies.

16 Termination

16.1 Termination:

This Interconnection Service Agreement and Interconnection Service under this Interconnection Service Agreement may be terminated by the following means:

16.1.1 By Mutual Consent:

Interconnection Service may be terminated as of the date on which the Interconnection Parties mutually agree to terminate the Interconnection Service Agreement.

16.1.2 By Interconnection Customer:

Interconnection Customer may unilaterally terminate the Interconnection Service Agreement pursuant to Applicable Laws and Regulations upon providing Transmission Provider and the Interconnected Transmission Owner sixty (60) days prior written notice thereof, provided that Interconnection Customer is not then in Default under the Interconnection Service Agreement.

16.1.3 Upon Default of Interconnection Customer:

Transmission Provider may terminate the Interconnection Service Agreement upon the Default of Interconnection Customer of its obligations under the Interconnection Service Agreement by providing Interconnection Customer and the Interconnected Transmission Owner prior written notice of termination; provided, however, that Transmission Provider shall not terminate the

Interconnection Service Agreement due to the failure of Interconnection Customer to make a payment hereunder unless such failure could reasonably be expected to have a material adverse effect on the Interconnected Transmission Owner.

16.2 Disposition of Facilities Upon Termination

16.2.1 Disconnection:

Upon termination of the Interconnection Service Agreement in accordance with this Section 16, Transmission Provider and/or the Interconnected Transmission Owner shall, in coordination with Interconnection Customer, physically disconnect the Customer Facility from the Transmission System, except to the extent otherwise allowed by this Appendix 2.

16.2.2 Network Facilities:

At the time of termination, the Transmission Provider and the Interconnected Entities shall keep in place any portion of the Interconnection Facilities that the Transmission Provider deems necessary for the safety, integrity and/or reliability of the Transmission System. Otherwise, Transmission Provider may, in its discretion, within 30 days following termination of Interconnection Service, require the removal of all or any part of the Interconnection Facilities.

16.2.2.1 In the event that (i) the Interconnection Service Agreement and Interconnection Service under this Appendix 2 are terminated and (ii) Transmission Provider determines that some or all of the Interconnection Facilities that are owned by the Interconnection Customer are necessary for the safety, integrity and/or reliability of the Transmission System, Interconnection Customer, subject to Applicable Laws and Regulations, shall transfer to the Interconnected Transmission Owner title to the Interconnection Facilities that Transmission Provider has determined to be necessary for the safety, integrity and/or reliability of the Transmission System.

16.2.2.2 In the event that removal of some or all of the Interconnection Facilities is necessary to maintain compliance with Applicable Standards, Interconnection Customer shall be responsible for the costs of any such removal. Interconnection Customer shall have the right to take or retain title to equipment and/or facilities that are removed pursuant to this section; alternatively, in the event that the Interconnection Customer does not wish to retain title to removed equipment and/or facilities that it owns, the Interconnected Transmission Owner may elect to pay the Interconnection Customer a mutually agreed amount to acquire and own such equipment and/or facilities.

16.2.3 Request for Disposition Determination:

Interconnection Customer may request a determination from the Transmission Provider whether any Interconnection Facilities will be removed in the event of any termination of Interconnection Service to the Customer Facility within the following year. Transmission Provider shall respond to that request no later than sixty (60) days after receipt.

16.3 FERC Approval:

Notwithstanding any other provision of this Appendix 2, no termination hereunder shall become effective until the Interconnected Entities and/or Transmission Provider have complied with all Applicable Laws and Regulations applicable to such termination, including the filing with the FERC of a notice of termination of the Interconnection Service Agreement, and acceptance of such notice for filing by the FERC.

16.4 Survival of Rights:

Termination of this Interconnection Service Agreement shall not relieve any Interconnection Party of any of its liabilities and obligations arising under this Interconnection Service Agreement (including Appendix 2) prior to the date on which termination becomes effective, and each Interconnection Party may take whatever judicial or administrative actions it deems desirable or necessary to enforce its rights hereunder. Applicable provisions of this Appendix 2 will continue in effect after termination to the extent necessary to provide for final billings, billing adjustments, and the determination and enforcement of liability and indemnification obligations arising from events or acts that occurred while the Interconnection Service Agreement was in effect.

17 Confidentiality:

Information is Confidential Information only if it is clearly designated or marked in writing as confidential on the face of the document, or, if the information is conveyed orally or by inspection, if the Interconnection Party providing the information orally informs the Interconnection Party receiving the information that the information is confidential. If requested by any Interconnection Party, the disclosing Interconnection Party shall provide in writing the basis for asserting that the information referred to in this section warrants confidential treatment, and the requesting Interconnection Party may disclose such writing to an appropriate Governmental Authority. Any Interconnection Party shall be responsible for the costs associated with affording confidential treatment to its information.

17.1 Term:

During the term of the Interconnection Service Agreement, and for a period of three (3) years after the expiration or termination of the Interconnection Service Agreement, except as otherwise provided in this Section 17, each Interconnection Party shall hold in confidence, and shall not disclose to any person, Confidential Information provided to it by any other Interconnection Party.

17.2 Scope:

Confidential Information shall not include information that the receiving Interconnection Party can demonstrate: (i) is generally available to the public other than as a result of a disclosure by the receiving Interconnection Party; (ii) was in the lawful possession of the receiving Interconnection Party on a non-confidential basis before receiving it from the disclosing

Interconnection Party; (iii) was supplied to the receiving Interconnection Party without restriction by a third party, who, to the knowledge of the receiving Interconnection Party, after due inquiry, was under no obligation to the disclosing Interconnection Party to keep such information confidential; (iv) was independently developed by the receiving Interconnection Party without reference to Confidential Information of the disclosing Interconnection Party; (v) is, or becomes, publicly known, through no wrongful act or omission of the receiving Interconnection Party or breach of this Appendix 2; or (vi) is required, in accordance with Section 17.7 of this Appendix 2, to be disclosed to any Governmental Authority or is otherwise required to be disclosed by law or subpoena, or is necessary in any legal proceeding establishing rights and obligations under the Interconnection Service Agreement. Information designated as Confidential Information shall no longer be deemed confidential if the Interconnection Party that designated the information as confidential notifies the other Interconnection Parties that it no longer is confidential.

17.3 Release of Confidential Information:

No Interconnection Party shall disclose Confidential Information to any other person, except to its Affiliates (limited by the Commission's Standards of Conduct requirements), subcontractors, employees, consultants or to parties who may be or considering providing financing to or equity participation in Interconnection Customer or to potential purchasers or assignees of Interconnection Customer, on a need-to-know basis in connection with the Interconnection Service Agreement, unless such person has first been advised of the confidentiality provisions of this Section 17 and has agreed to comply with such provisions. Notwithstanding the foregoing, an Interconnection Party providing Confidential Information to any person shall remain primarily responsible for any release of Confidential Information in contravention of this Section 17.

17.4 Rights:

Each Interconnection Party retains all rights, title, and interest in the Confidential Information that it discloses to any other Interconnection Party. An Interconnection Party's disclosure to another Interconnection Party of Confidential Information shall not be deemed a waiver by any Interconnection Party or any other person or entity of the right to protect the Confidential Information from public disclosure.

17.5 No Warranties:

By providing Confidential Information, no Interconnection Party makes any warranties or representations as to its accuracy or completeness. In addition, by supplying Confidential Information, no Interconnection Party obligates itself to provide any particular information or Confidential Information to any other Interconnection Party nor to enter into any further agreements or proceed with any other relationship or joint venture.

17.6 Standard of Care:

Each Interconnection Party shall use at least the same standard of care to protect Confidential Information it receives as the Interconnection Party uses to protect its own Confidential Information from unauthorized disclosure, publication or dissemination. Each Interconnection Party may use Confidential Information solely to fulfill its obligations to the other Interconnection Parties under the Interconnection Service Agreement or to comply with Applicable Laws and Regulations.

17.7 Order of Disclosure:

If a Governmental Authority with the right, power, and apparent authority to do so requests or requires an Interconnection Party, by subpoena, oral deposition, interrogatories, requests for production of documents, administrative order, or otherwise, to disclose Confidential Information, that Interconnection Party shall provide the Interconnection Party that provided the information with prompt prior notice of such request(s) or requirement(s) so that the providing Interconnection Party may seek an appropriate protective order or waive compliance with the terms of this Appendix 2 or the Interconnection Service Agreement. Notwithstanding the absence of a protective order or agreement, or waiver, the Interconnection Party that is subjected to the request or order may disclose such Confidential Information which, in the opinion of its counsel, the Interconnection Party is legally compelled to disclose. Each Interconnection Party shall use Reasonable Efforts to obtain reliable assurance that confidential treatment will be accorded any Confidential Information so furnished.

17.8 Termination of Interconnection Service Agreement:

Upon termination of the Interconnection Service Agreement for any reason, each Interconnection Party shall, within ten (10) calendar days of receipt of a written request from another party, use Reasonable Efforts to destroy, erase, or delete (with such destruction, erasure and deletion certified in writing to the requesting party) or to return to the other party, without retaining copies thereof, any and all written or electronic Confidential Information received from the requesting party.

17.9 Remedies:

The Interconnection Parties agree that monetary damages would be inadequate to compensate an Interconnection Party for another Interconnection Party's Breach of its obligations under this Section 17. Each Interconnection Party accordingly agrees that the other Interconnection Parties shall be entitled to equitable relief, by way of injunction or otherwise, if the first Interconnection Party breaches or threatens to breach its obligations under this Section 17, which equitable relief shall be granted without bond or proof of damages, and the receiving Interconnection Party shall not plead in defense that there would be an adequate remedy at law. Such remedy shall not be deemed to be an exclusive remedy for the breach of this Section 17, but shall be in addition to all other remedies available at law or in equity. The Interconnection Parties further acknowledge and agree that the covenants contained herein are necessary for the protection of legitimate business interests and are reasonable in scope. No Interconnection Party, however, shall be liable for indirect, incidental or consequential or punitive damages of any nature or kind resulting from or arising in connection with this Section 17.

17.10 Disclosure to FERC or its Staff:

Notwithstanding anything in this Section 17 to the contrary, and pursuant to 18 C.F.R. § 1b.20, if FERC or its staff, during the course of an investigation or otherwise, requests information from one of the Interconnection Parties that is otherwise required to be maintained in confidence pursuant to this Interconnection Service Agreement, the Interconnection Party, shall provide the requested information to FERC or its staff, within the time provided for in the request for information. In providing the information to FERC or its staff, the Interconnection Party must, consistent with 18 C.F.R. § 388.122, request that the information be treated as confidential and non-public by FERC and its staff and that the information be withheld from public disclosure. Interconnection Parties are prohibited from notifying the other Interconnection Parties prior to the release of the Confidential Information to the Commission or its staff. An Interconnection Party shall notify the other Interconnection Parties to the Interconnection Service Agreement when it is notified by FERC or its staff that a request to release Confidential Information has been received by FERC, at which time any of the Interconnection Parties may respond before such information would be made public, pursuant to 18 C.F.R. § 388.112.

17.11

Subject to the exception in Section 17.10 of this Appendix 2, no Interconnection Party shall disclose Confidential Information of another Interconnection Party to any person not employed or retained by the Interconnection Party, except to the extent disclosure is (i) required by law; (ii) reasonably deemed by the disclosing Interconnection Party to be required in connection with a dispute between or among the Interconnection Parties, or the defense of litigation or dispute; (iii)_ otherwise permitted by consent of the Interconnection Party that provided such Confidential Information, such consent not to be unreasonably withheld; or (iv) necessary to fulfill its obligations under this Interconnection Service Agreement or as a transmission service provider or a Control Area operator including disclosing the Confidential Information to an RTO or ISO or to a regional or national reliability organization. Prior to any disclosures of another Interconnection Party's Confidential Information under this subparagraph, the disclosing Interconnection Party shall promptly notify the other Interconnection Parties in writing and shall assert confidentiality and cooperate with the other Interconnection Parties in seeking to protect the Confidential Information from public disclosure by confidentiality agreement, protective order or other reasonable measures.

17.12

This provision shall not apply to any information that was or is hereafter in the public domain (except as a result of a Breach of this provision).

17.13 Return or Destruction of Confidential Information:

If an Interconnection Party provides any Confidential Information to another Interconnection Party in the course of an audit or inspection, the providing Interconnection Party may request the other party to return or destroy such Confidential Information after the termination of the audit

period and the resolution of all matters relating to that audit. Each Interconnection Party shall make Reasonable Efforts to comply with any such requests for return or destruction within ten days of receiving the request and shall certify in writing to the other Interconnection Party that it has complied with such request.

18 Subcontractors

18.1 Use of Subcontractors:

Nothing in this Appendix 2 shall prevent the Interconnection Parties from utilizing the services of subcontractors as they deem appropriate to perform their respective obligations hereunder, provided, however, that each Interconnection Party shall require its subcontractors to comply with all applicable terms and conditions of this Appendix 2 in providing such services.

18.2 Responsibility of Principal:

The creation of any subcontract relationship shall not relieve the hiring Interconnection Party of any of its obligations under this Appendix 2. Each Interconnection Party shall be fully responsible to the other Interconnection Parties for the acts and/or omissions of any subcontractor it hires as if no subcontract had been made.

18.3 Indemnification by Subcontractors:

To the fullest extent permitted by law, an Interconnection Party that uses a subcontractor to carry out any of the Interconnection Party's obligations under this Appendix 2 shall require each of its subcontractors to indemnify, hold harmless and defend each other Interconnection Party, its representatives and assigns from and against any and all claims and/or liability for damage to property, injury to or death of any person, including the employees of any Interconnection Party or of any Affiliate of any Interconnection Party, or any other liability incurred by the other Interconnection Party or any of its Affiliates, including all expenses, legal or otherwise, to the extent caused by any act or omission, negligent or otherwise, by such subcontractor and/or its officers, directors, employees, agents and assigns, that arises out of or is connected with the operation of the facilities of either Interconnected Entity described in this Appendix 2; provided, however, that no Interconnection Party or Affiliate thereof shall be entitled to indemnity under this Section 18.3 in respect of any injury, loss, or damage to the extent that such loss, injury, or damage results from the negligence or willful misconduct of the Interconnection Party or Affiliate seeking indemnity.

18.4 Subcontractors Not Beneficiaries:

No subcontractor is intended to be, or shall be deemed to be, a third-party beneficiary of an Interconnection Service Agreement.

19 Information Access And Audit Rights

19.1 Information Access:

Consistent with Applicable Laws and Regulations, each Interconnection Party shall make available such information and/or documents reasonably requested by another Interconnection Party that are necessary to (i) verify the costs incurred by the other Interconnection Party for which the requesting Interconnection Party is responsible under this Appendix 2 and (ii) carry out obligations and responsibilities under this Appendix 2, provided that the Interconnection Parties shall not use such information for purposes other than those set forth in this Section 19.1 and to enforce their rights under this Appendix 2.

19.2 Reporting of Non-Force Majeure Events:

Each Interconnection Party shall notify the other Interconnection Parties when it becomes aware of its inability to comply with the provisions of this Appendix 2 for a reason other than an event of force majeure as defined in Section 9.4 of this Appendix 2. The parties agree to cooperate with each other and provide necessary information regarding such inability to comply, including, but not limited to, the date, duration, reason for the inability to comply, and corrective actions taken or planned to be taken with respect to such inability to comply. Notwithstanding the foregoing, notification, cooperation or information provided under this Section shall not entitle the receiving Interconnection Party to allege a cause of action for anticipatory breach of the Interconnection Service Agreement.

19.3 Audit Rights:

Subject to the requirements of confidentiality under Section 17 of this Appendix 2, each Interconnection Party shall have the right, during normal business hours, and upon prior reasonable notice to the pertinent other Interconnection Party, to audit at its own expense the other Interconnection Party's accounts and records pertaining to such Interconnection Party's performance and/or satisfaction of obligations arising under this Appendix 2. Any audit authorized by this Section shall be performed at the offices where such accounts and records are maintained and shall be limited to those portions of such accounts and records that relate to obligations under this Appendix 2. Any request for audit shall be presented to the Interconnection Party to be audited not later than twenty-four months after the event as to which the audit is sought. Each Interconnection Party shall preserve all records held by it for the duration of the audit period.

20 Disputes

20.1 Submission:

Any claim or dispute that any Interconnection Party may have against another arising out of the Interconnection Service Agreement may be submitted for resolution in accordance with the dispute resolution provisions of the Tariff.

20.2 Rights Under The Federal Power Act:

Nothing in this Section shall restrict the rights of any Interconnection Party to file a complaint with FERC under relevant provisions of the Federal Power Act.

20.3 Equitable Remedies:

Nothing in this Section shall prevent any Interconnection Party from pursuing or seeking any equitable remedy available to it under Applicable Laws and Regulations.

21 Notices

21.1 General:

Any notice, demand or request required or permitted to be given by any Interconnection Party to another and any instrument required or permitted to be tendered or delivered by any Interconnection Party in writing to another may be so given, tendered or delivered, by recognized national courier, or by depositing the same with the United States Postal Service with postage prepaid, for delivery by certified or registered mail, addressed to the Interconnection Party, or personally delivered to the Interconnection Party, at the address specified in the Interconnection Service Agreement. Such notices, if agreed to by the Interconnection Parties, may be made via electronic means, with e-mail confirmation of delivery.

21.2 Emergency Notices:

Moreover, notwithstanding the foregoing, any notice hereunder concerning an Emergency Condition or other occurrence requiring prompt attention, or as necessary during day-to-day operations, may be made by telephone or in person, provided that such notice is confirmed in writing promptly thereafter. Notice in an Emergency Condition, or as necessary during day-to-day operations, shall be provided (i) if by the Interconnected Transmission Owner, to the shift supervisor at, as applicable, a Generation Interconnection Customer's Customer Facility or a Transmission Interconnection Customer's control center; and (ii) if by the Interconnection Customer, to the shift supervisor at the Interconnected Transmission Owner's transmission control center.

21.3 Operational Contacts:

Each Interconnection Party shall designate, and provide to each other Interconnection Party contact information concerning, a representative to be responsible for addressing and resolving operational issues as they arise during the term of the Interconnection Service Agreement.

22 Miscellaneous

22.1 Regulatory Filing:

In the event that this Interconnection Service Agreement contains any terms that deviate materially from the form included in Attachment O of the Tariff, Transmission Provider shall file the Interconnection Service Agreement on behalf of itself and the Interconnected Transmission

Owner with FERC as a service schedule under the Tariff within thirty days after execution. Interconnection Customer may request that any information so provided be subject to the confidentiality provisions of Section 17 of this Appendix 2. An Interconnection Customer shall have the right, with respect to any Interconnection Service Agreement tendered to it, to request (a) dispute resolution under Section 12 of the Tariff or, if concerning the Regional Transmission Expansion Plan, consistent with Schedule 5 of the Operating Agreement, or (b) that Transmission Provider file the agreement unexecuted with the Commission. With the filing of any unexecuted Interconnection Service Agreement, Transmission Provider may, in its discretion, propose to FERC a resolution of any or all of the issues in dispute between or among the Interconnection Parties.

22.2 Waiver:

Any waiver at any time by an Interconnection Party of its rights with respect to a Breach or Default under this Interconnection Service Agreement or with respect to any other matters arising in connection with this Appendix 2, shall not be deemed a waiver or continuing waiver with respect to any subsequent Breach or Default or other matter.

22.3 Amendments and Rights Under the Federal Power Act:

This Interconnection Service Agreement may be amended or supplemented only by a written instrument duly executed by all Interconnection Parties. An amendment to the Interconnection Service Agreement shall become effective and a part of this Interconnection Service Agreement upon satisfaction of all Applicable Laws and Regulations. Notwithstanding the foregoing, nothing contained in this Interconnection Service Agreement shall be construed as affecting in any way any of the rights of any Interconnection Party with respect to changes in applicable rates or charges under Section 205 of the Federal Power Act and/or FERC's rules and regulations thereunder, or any of the rights of any Interconnection Party under Section 206 of the Federal Power Act and/or FERC's rules and regulations thereunder. The terms and conditions of this Interconnection Service Agreement and every appendix referred to therein shall be amended, as mutually agreed by the Interconnection Parties, to comply with changes or alterations made necessary by a valid applicable order of any Governmental Authority having jurisdiction hereof.

22.4 Binding Effect:

This Interconnection Service Agreement, including this Appendix 2, and the rights and obligations thereunder shall be binding upon, and shall inure to the benefit of, the successors and assigns of the Interconnection Parties.

22.5 Regulatory Requirements:

Each Interconnection Party's performance of any obligation under this Interconnection Service Agreement for which such party requires approval or authorization of any Governmental Authority shall be subject to its receipt of such required approval or authorization in the form and substance satisfactory to the receiving Interconnection Party, or the Interconnection Party making any required filings with, or providing notice to, such Governmental Authorities, and the

expiration of any time period associated therewith. Each Interconnection Party shall in good faith seek, and shall use Reasonable Efforts to obtain, such required authorizations or approvals as soon as reasonably practicable.

23 Representations And Warranties

23.1 General:

Each Interconnected Entity hereby represents, warrants and covenants as follows with these representations, warranties, and covenants effective as to the Interconnected Entity during the time the Interconnection Service Agreement is effective:

23.1.1 Good Standing:

Such Interconnected Entity is duly organized or formed, as applicable, validly existing and in good standing under the laws of its State of organization or formation, and is in good standing under the laws of the respective State(s) in which it is incorporated and operates as stated in the Interconnection Service Agreement.

23.1.2 Authority:

Such Interconnected Entity has the right, power and authority to enter into the Interconnection Service Agreement, to become a party hereto and to perform its obligations hereunder. The Interconnection Service Agreement is a legal, valid and binding obligation of such Interconnected Entity, enforceable against such Interconnected Entity in accordance with its terms, except as the enforceability thereof may be limited by applicable bankruptcy, insolvency, reorganization or other similar laws affecting creditors' rights generally and by general equitable principles (regardless of whether enforceability is sought in a proceeding in equity or at law).

23.1.3 No Conflict:

The execution, delivery and performance of the Interconnection Service Agreement does not violate or conflict with the organizational or formation documents, or bylaws or operating agreement, of the Interconnected Entity, or with any judgment, license, permit, order, material agreement or instrument applicable to or binding upon the Interconnected Entity or any of its assets.

23.1.4 Consent and Approval:

Such Interconnected Entity has sought or obtained, or, in accordance with the Interconnection Service Agreement will seek or obtain, each consent, approval, authorization, order, or acceptance by any Governmental Authority in connection with the execution, delivery and performance of the Interconnection Service Agreement and it will provide to any Governmental Authority notice of any actions under this Appendix 2 that are required by Applicable Laws and Regulations.

24 Tax Liability

24.1 Safe Harbor Provisions:

This Section 24.1 is applicable only to Generation Interconnection Customers. Provided that Interconnection Customer agrees to conform to all requirements of the Internal Revenue Service ("IRS") (e.g., the "safe harbor" provisions of IRS Notice 2016-36, 2016-25 I.R.B. (6/20/2016)) that would confer nontaxable status on some or all of the transfer of property, including money, by Interconnection Customer to the Interconnected Transmission Owner for payment of the Costs of construction of the Transmission Owner Interconnection Facilities, the Interconnected Transmission Owner, based on such agreement and on current law, shall treat such transfer of property to it as nontaxable income and, except as provided in Section 24.4.2 below, shall not include income taxes in the Costs of Transmission Owner Interconnection Facilities that are payable by Interconnection Customer under the Interconnection Service Agreement or the Interconnection Construction Service Agreement. Interconnection Customer shall document its agreement to conform to IRS requirements for such non-taxable status in the Interconnection Service Agreement, the Interconnection Construction Service Agreement, and/or the Interim Interconnection Service Agreement.

24.2 Tax Indemnity:

Interconnection Customer shall indemnify the Interconnected Transmission Owner for any costs that Interconnected Transmission Owner incurs in the event that the IRS and/or a state department of revenue (State) determines that the property, including money, transferred by Interconnection Customer to the Interconnected Transmission Owner with respect to the construction of the Transmission Owner Interconnection Facilities is taxable income to the Interconnected Transmission Owner. Interconnection Customer shall pay to the Interconnected Transmission Owner, on demand, the amount of any income taxes that the IRS or a State assesses to the Interconnected Transmission Owner in connection with such transfer of property and/or money, plus any applicable interest and/or penalty charged to the Interconnected Transmission Owner. In the event that the Interconnected Transmission Owner chooses to contest such assessment, either at the request of Interconnection Customer or on its own behalf, and prevails in reducing or eliminating the tax, interest and/or penalty assessed against it, the Interconnected Transmission Owner shall refund to Interconnection Customer the excess of its demand payment made to the Interconnected Transmission Owner over the amount of the tax, interest and penalty for which the Interconnected Transmission Owner is finally determined to be liable. Interconnection Customer's tax indemnification obligation under this section shall survive any termination of the Interconnection Service Agreement or Interconnection Construction Service Agreement.

24.3 Taxes Other Than Income Taxes:

Upon the timely request by Interconnection Customer, and at Interconnection Customer's sole expense, the Interconnected Transmission Owner shall appeal, protest, seek abatement of, or otherwise contest any tax (other than federal or state income tax) asserted or assessed against the Interconnected Transmission Owner for which Interconnection Customer may be required to

reimburse Transmission Provider under the terms of this Appendix 2 or Part VI of the Tariff. Interconnection Customer shall pay to the Interconnected Transmission Owner on a periodic basis, as invoiced by the Interconnected Transmission Owner, the Interconnected Transmission Owner's documented reasonable costs of prosecuting such appeal, protest, abatement, or other contest. Interconnection Customer and the Interconnected Transmission Owner shall cooperate in good faith with respect to any such contest. Unless the payment of such taxes is a prerequisite to an appeal or abatement or cannot be deferred, no amount shall be payable by Interconnection Customer to the Interconnected Transmission Owner for such contested taxes until they are assessed by a final, non-appealable order by any court or agency of competent jurisdiction. In the event that a tax payment is withheld and ultimately due and payable after appeal, Interconnection Customer will be responsible for all taxes, interest and penalties, other than penalties attributable to any delay caused by the Interconnected Transmission Owner.

24.4 Income Tax Gross-Up

24.4.1 Additional Security:

In the event that Interconnection Customer does not provide the safe harbor documentation required under Section 24.1 prior to execution of the Interconnection Service Agreement, within 15 days after such execution, Transmission Provider shall notify Interconnection Customer in writing of the amount of additional Security that Interconnection Customer must provide. The amount of Security that a Transmission Interconnection Customer must provide initially pursuant to this Interconnection Service Agreement shall include any amounts described as additional Security under this Section 24.4 regarding income tax gross-up.

24.4.2 Amount:

The required additional Security shall be in an amount equal to the amount necessary to gross up fully for currently applicable federal and state income taxes the estimated Costs of Local Upgrades and Network Upgrades for which Interconnection Customer previously provided Security. Accordingly, the additional Security shall equal the amount necessary to increase the total Security provided to the amount that would be sufficient to permit the Interconnected Transmission Owner to receive and retain, after the payment of all applicable income taxes ("Current Taxes") and taking into account the present value of future tax deductions for depreciation that would be available as a result of the anticipated payments or property transfers (the "Present Value Depreciation Amount"), an amount equal to the estimated Costs of Local Upgrades and Network Upgrades for which Interconnection Customer is responsible under the Interconnection Service Agreement. For this purpose, Current Taxes shall be computed based on the composite federal and state income tax rates applicable to the Interconnected Transmission Owner at the time the additional Security is received, determined using the highest marginal rates in effect at that time (the "Current Tax Rate"), and (ii) the Present Value Depreciation Amount shall be computed by discounting the Interconnected Transmission Owner's anticipated tax depreciation deductions associated with such payments or property transfers by its current weighted average cost of capital.

24.4.3 Time for Payment:

Interconnection Customer must provide the additional Security, in a form and with terms as required by Sections 212.4 of the Tariff, within 15 days after its receipt of Transmission Provider's notice under this section. The requirement for additional Security under this section shall be treated as a milestone included in the Interconnection Service Agreement pursuant to Section 217.5 of the Tariff.

24.5 Tax Status:

Each Party shall cooperate with the other to maintain the other Party's tax status. Nothing in this Interconnection Service Agreement or Part VI of the Tariff is intended to adversely affect any Interconnected Transmission Owner's tax exempt status with respect to the issuance of bonds including, but not limited to, local furnishing bonds.

SCHEDULE A

CUSTOMER FACILITY LOCATION/SITE PLAN

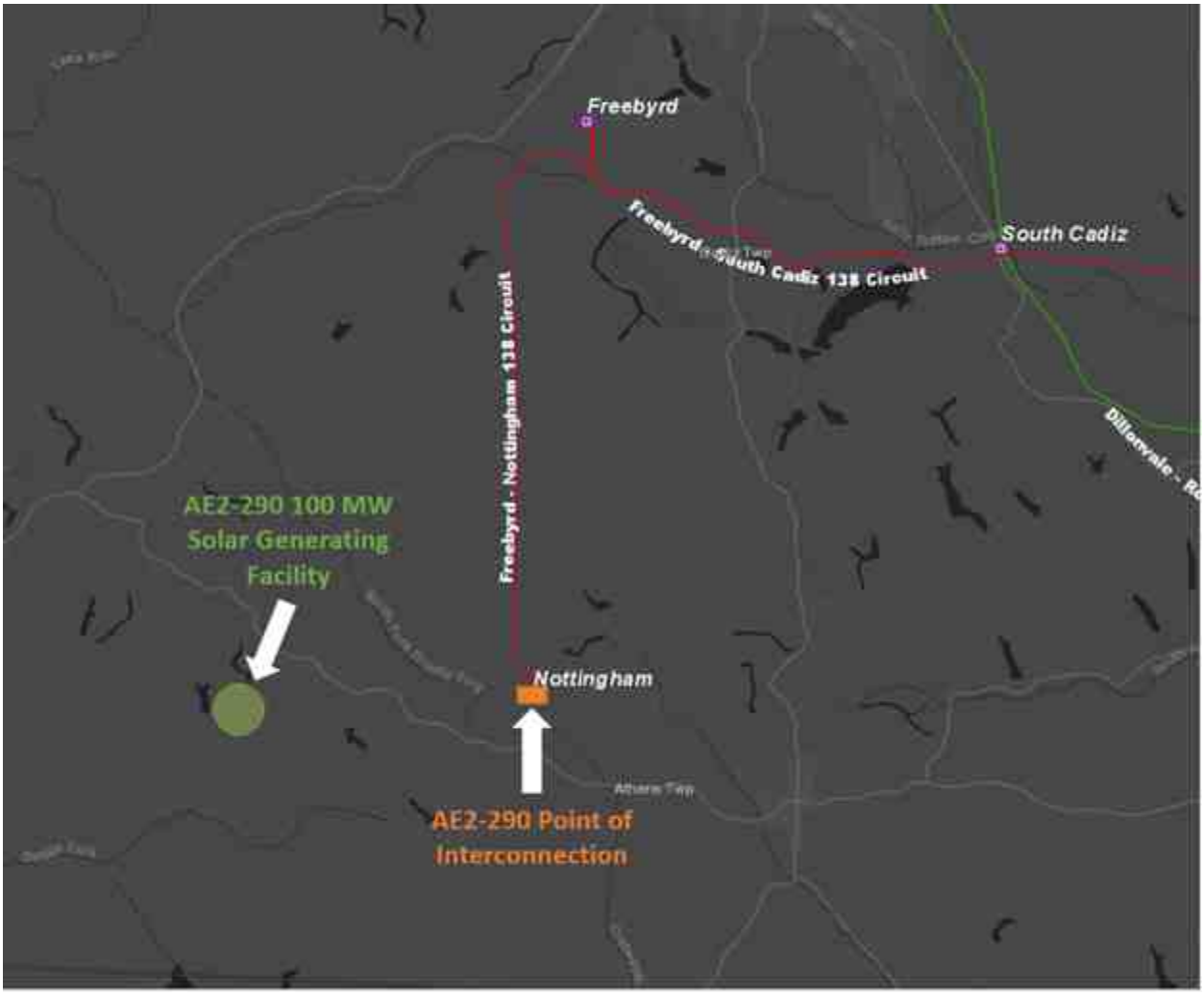

SCHEDULE B

SINGLE-LINE DIAGRAM

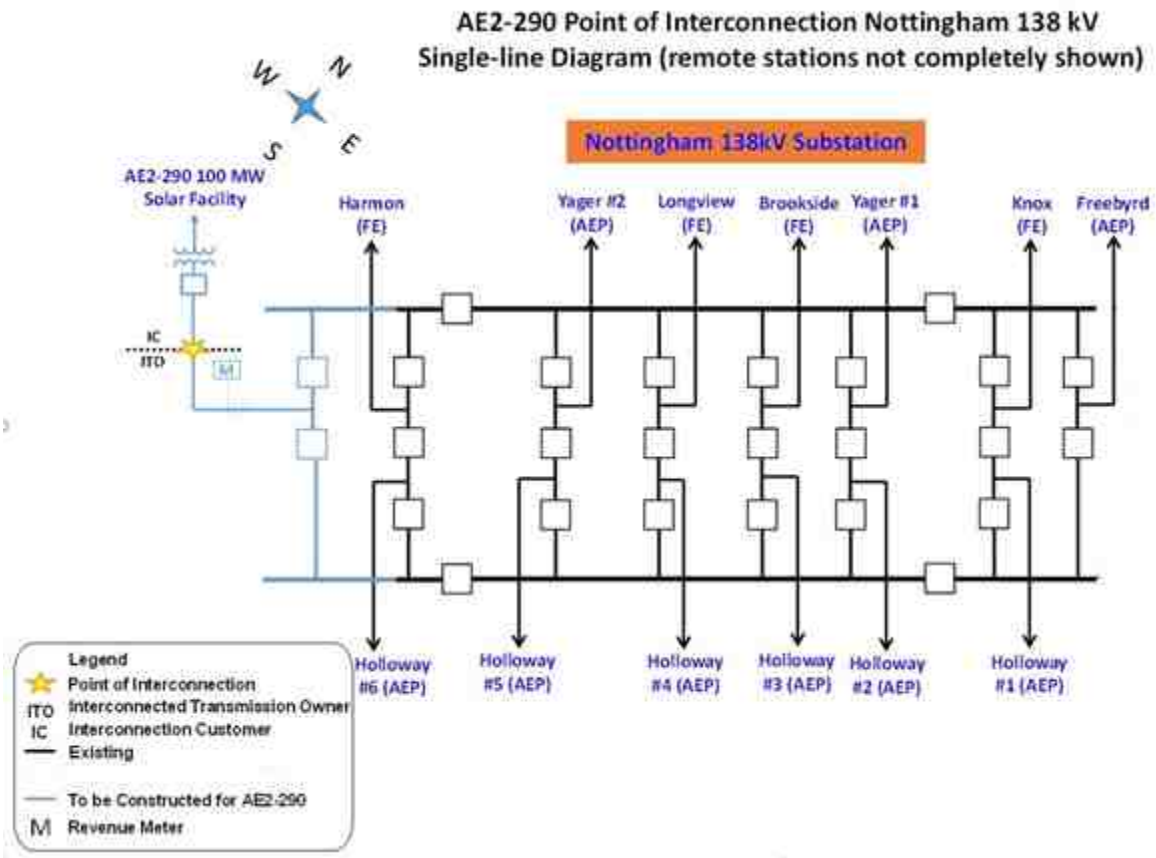

The Point of Interconnection is at the first (dead-end) structure outside (north-west) of the Nottingham 138 kV Station fence. Interconnected Transmission Owner owns the span from the Nottingham 138 kV Station to the dead-end, including the jumpers and structure at the dead-end. Interconnection Customer owns the span and structures from the dead-end to the AE2-290 generation collector station.

SCHEDULE C

LIST OF METERING EQUIPMENT

AEP will install and own primary and backup revenue metering at the Interconnection Customer's termination in the transmission switching substation as shown in Schedule B. AEP will submit all real and reactive power generation data to PJM as per PJM Manual 14 D.

The Interconnection Customer is responsible for installing equipment assuring that the following real time data is transmitted to PJM as per PJM Manual 14D:

a. Instantaneous net MW for the plant.
b. Instantaneous net MVAR for the plant.

The Interconnection Customer is responsible for installing equipment assuring the following non real-time data is transmitted to PJM as per PJM Manual 14D:

a. Hourly compensated MWh delivered by the plant.
b. Hourly compensated MWh received by the plant.
c. Hourly compensated MVARh delivered by the plant.
d. Hourly compensated MVARh received by the plant.

The Interconnection Customer will be required to install telemetry and communication equipment to provide real-time telemetry data to PJM as well as having the ability to receive and respond to PJM operational command and control signals. The requirements for this equipment are listed in Sections 8.1 through 8.5 of Appendix 2 of this ISA, as well as PJM Manuals 01 and 14D.

SCHEDULE D

APPLICABLE TECHNICAL REQUIREMENTS AND STANDARDS

Applicable Technical Requirements and Standards are set forth in the following documents that are posted on the PJM website:

- Requirements for Connection of New Facilities or Changes to Existing Facilities Connected to the AEP Transmission System, Revision 3 dated June 30, 2021;
- Standards and Expectations for Siting, Real Estate, Right-of-Way, and Environmental Permitting for Transmission Interconnection Projects, Version 2 dated August 20, 2020; and
- Independent Power Producer (IPP) Option to Build Guidelines, Revision 2 dated December 7, 2020.

To the extent that these Applicable Technical Requirements and Standards conflict with the terms and conditions of the Tariff or any other provision of this ISA, the Tariff and/or this ISA shall control.

SCHEDULE E

SCHEDULE OF CHARGES

None

SCHEDULE F

SCHEDULE OF NON-STANDARD TERMS & CONDITIONS

None

SCHEDULE G

INTERCONNECTION CUSTOMER'S AGREEMENT TO CONFORM WITH IRS SAFE HARBOR PROVISIONS FOR NON-TAXABLE STATUS

As provided in Section 24.1 of Appendix 2 to this ISA and subject to the requirements thereof, Interconnection Customer represents that it meets all qualifications and requirements as set forth in Section 118(a) and 118(b) of the Internal Revenue Code of 1986, as amended and interpreted by Notice 2016-36, 2016-25 I.R.B. (6/20/2016) (the "IRS Notice"). Interconnection Customer agrees to conform with all requirements of the safe harbor provisions specified in the IRS Notice, as they may be amended, as required to confer non-taxable status on some or all of the transfer of property, including money, by Interconnection Customer to Interconnected Transmission Owner with respect to the payment of the Costs of construction and installation of the Transmission Owner Interconnection Facilities specified in this ISA.

Nothing in Interconnection Customer's agreement pursuant to this Schedule G shall change Interconnection Customer's indemnification obligations under Section 24.2 of Appendix 2 to this ISA.

SCHEDULE H

INTERCONNECTION REQUIREMENTS FOR ALL WIND, SOLAR AND NON-SYNCHRONOUS GENERATION FACILITIES

A. Voltage Ride Through Requirements

The Customer Facility shall be designed to remain in service (not trip) for voltages and times as specified for the Eastern Interconnection in Attachment 1 of NERC Reliability Standard PRC-024-1, and successor Reliability Standards, for both high and low voltage conditions, irrespective of generator size,
subject to the permissive trip exceptions established in PRC-024-1 (and successor Reliability Standards).

B. Frequency Ride Through Requirements

The Customer Facility shall be designed to remain in service (not trip) for frequencies and times as specified in Attachment 2 of NERC Reliability Standard PRC-024-1, and successor Reliability Standards, for both high and low frequency condition, irrespective of generator size, subject to the permissive trip exceptions established in PRC-024-1 (and successor Reliability Standards).

C. Supervisory Control and Data Acquisition (SCADA) Capability

The wind, solar or non-synchronous generation facility shall provide SCADA capability to transmit data and receive instructions from the Transmission Provider to protect system reliability. The Transmission Provider and the wind, solar or non-synchronous generation facility Interconnection Customer shall determine what SCADA information is essential for the proposed wind, solar or non-synchronous generation facility, taking into account the size of the facility and its characteristics, location, and importance in maintaining generation resource adequacy and transmission system reliability in its area.

D. Meteorological Data Reporting Requirement (Applicable to wind generation facilities only)

The wind generation facility shall, at a minimum, be required to provide the Transmission Provider with site-specific meteorological data including:

- Temperature (degrees Fahrenheit)
- Wind speed (meters/second)
- Wind direction (degrees from True North)
- Atmosphere pressure (hectopascals)
- Forced outage data (wind turbine and MW unavailability)

E. Meteorological Data Reporting Requirement (Applicable to solar generation

facilities only)

The solar generation facility shall, at a minimum, be required to provide the Transmission Provider with site-specific meteorological data including:

- Temperature (degrees Fahrenheit)
- Irradiance
- Forced outage data

The Transmission Provider and Interconnection Customer may mutually agree to any additional meteorological data that are required for the development and deployment of a power production forecast. All requirements for meteorological and forced outage data must be commensurate with the power production forecasting employed by the Transmission Provider. Such additional mutually agreed upon requirements for meteorological and forced outage data are set forth below:
NOT APPLICABLE FOR THIS ISA

SCHEDULE I

INTERCONNECTION SPECIFICATIONS FOR AN ENERGY STORAGE RESOURCE

Not Required

SCHEDULE J

SCHEDULE OF TERMS AND CONDITIONS FOR SURPLUS INTERCONNECTION SERVICE

Not Required

SCHEDULE K

REQUIREMENTS FOR INTERCONNECTION SERVICE BELOW FULL ELECTRICAL GENERATING CAPABILITY

None

ATTACHMENT B

Amended ISA, Service Agreement No. 6237
(Clean Tariff)

(PJM Queue #AE2-290)

INTERCONNECTION SERVICE AGREEMENT
Among
PJM INTERCONNECTION, L.L.C.
And
NOTTINGHAM SOLAR LLC
And
AEP OHIO TRANSMISSION COMPANY, INC.

INTERCONNECTION SERVICE AGREEMENT
By and Among
PJM Interconnection, L.L.C.
And
Nottingham Solar LLC
And
AEP Ohio Transmission Company, Inc.
(PJM Queue Position #AE2-290)

1.0 Parties. This Interconnection Service Agreement ("ISA") including the Specifications, Schedules and Appendices attached hereto and incorporated herein, is entered into by and between PJM Interconnection, L.L.C., the Regional Transmission Organization for the PJM Region (hereinafter "Transmission Provider" or "PJM"), Nottingham Solar LLC ("Interconnection Customer") and AEP Ohio Transmission Company, Inc. ("Interconnected Transmission Owner" or "AEP"). All capitalized terms herein shall have the meanings set forth in the appended definitions of such terms as stated in Part I of the PJM Open Access Transmission Tariff ("Tariff"). This ISA amends the Interconnection Service Agreement among the Parties, Service Agreement No. 6237, effective November 15, 2021, filed with and accepted by the Federal Energy Regulatory Commission in Docket No. ER22-658-000, as amended in Docket No. ER23-2931-000, effective November 27, 2023.

2.0 Authority. This ISA is entered into pursuant to Part VI of the Tariff. Interconnection Customer has requested an Interconnection Service Agreement under the Tariff, and Transmission Provider has determined that Interconnection Customer is eligible under the Tariff to obtain this ISA. The standard terms and conditions for interconnection as set forth in Appendix 2 to this ISA are hereby specifically incorporated as provisions of this ISA. Transmission Provider, Interconnected Transmission Owner and Interconnection Customer agree to and assume all of the rights and obligations of the Transmission Provider, Interconnected Transmission Owner and Interconnection Customer, respectively, as set forth in Appendix 2 to this ISA.

3.0 Customer Facility Specifications. Attached are Specifications for the Customer Facility that Interconnection Customer proposes to interconnect with the Transmission System. Interconnection Customer represents and warrants that, upon completion of construction of such facilities, it will own or control the Customer Facility identified in section 1.0 of the Specifications attached hereto and made a part hereof. In the event that Interconnection Customer will not own the Customer Facility, Interconnection Customer represents and warrants that it is authorized by the owner(s) thereof to enter into this ISA and to represent such control.

4.0 Effective Date. Subject to any necessary regulatory acceptance, this ISA shall become effective on the date it is executed by all Interconnection Parties, or, if the agreement is filed with FERC unexecuted, upon the date specified by FERC. This ISA shall terminate

on such date as mutually agreed upon by the parties, unless earlier terminated in accordance with the terms set forth in Appendix 2 to this ISA. The term of the ISA shall be as provided in Section 1.3 of Appendix 2 to this ISA. Interconnection Service shall commence as provided in Section 1.2 of Appendix 2 to this ISA.

5.0 Security. In accord with Section 212.4 of the Tariff, Interconnection Customer shall provide the Transmission Provider (for the benefit of the Interconnected Transmission Owner) with a letter of credit from an agreed provider or other form of security reasonably acceptable to the Transmission Provider and that names the Transmission Provider as beneficiary ("Security") in the amount of $557,327. This amount represents the sum of the estimated Costs, determined in accordance with Sections 212 and 217 of the Tariff, for which the Interconnection Customer will be responsible, less any Costs already paid by Interconnection Customer. Interconnection Customer acknowledges that its ultimate cost responsibility in accordance with Section 217 of the Tariff will be based upon the actual Costs of the facilities described in the Specifications, whether greater or lesser than the amount of the payment security provided under this section.

For any portion of the security that may be deferred in accordance with Section 212.4(c) of the Tariff, and as requested by Interconnection Customer, Interconnection Customer shall provide the security specified in this Section 5.0 within 120 days after the Interconnection Customer executes this ISA, provided that Interconnection Customer shall pay a deposit of at least $200,000 or 125% of the estimated costs that will be incurred during the 120-day period, whichever is greater, to fund continued design work and/or procurement activities, with $100,000 of such deposit being non-refundable.

Should Interconnection Customer fail to provide security at the time the Interconnection Customer executes this ISA, or, if deferred, by the end of the 120-day period, this ISA shall be terminated.

6.0 Project Specific Milestones. In addition to the milestones stated in Section 212.5 of the Tariff, as applicable, during the term of this ISA, Interconnection Customer shall ensure that it meets each of the following development milestones:

6.1 Site permits. On or before October 17, 2025, Interconnection Customer must demonstrate that it has obtained any necessary local, county, and state site permits.

6.2 Acquisition of major electrical equipment. On or before July 1, 2025, Interconnection Customer must demonstrate that it has signed a memorandum of understanding for the acquisition of major equipment.

6.3 Substantial Site work completed. On or before March 16, 2026, Interconnection Customer must demonstrate completion of at least 20% of project site construction. At this time, Interconnection Customer must submit to Interconnected Transmission Owner and Transmission Provider initial drawings, certified by a professional engineer, of the Customer Interconnection Facilities.

6.4 Delivery of major electrical equipment. On or before June 16, 2026, Interconnection Customer must demonstrate that all generating units have been delivered to Interconnection Customer's project site.

6.5 Commercial Operation. On or before December 15, 2026, Interconnection Customer must demonstrate commercial operation of all generating units. Demonstrating commercial operation includes achieving Initial Operation in accordance with Section 1.4 of Appendix 2 to this ISA and making commercial sales or use of energy, as well as, if applicable, obtaining capacity qualification in accordance with the requirements of the Reliability Assurance Agreement Among Load Serving Entities in the PJM Region.

6.6 Within one (1) month following commercial operation of generating unit(s), Interconnection Customer must provide certified documentation demonstrating that "as-built" Customer Facility and Customer Interconnection Facilities are in accordance with applicable PJM studies and agreements. Interconnection Customer must also provide PJM with "as-built" electrical modeling data or confirm that previously submitted data remains valid.

Interconnection Customer shall demonstrate the occurrence of each of the foregoing milestones to Transmission Provider's reasonable satisfaction. Transmission Provider may reasonably extend any such milestone dates, in the event of delays that Interconnection Customer (i) did not cause and (ii) could not have remedied through the exercise of due diligence. The milestone dates stated in this ISA shall be deemed to be extended coextensively with any suspension of work initiated by Interconnection Customer in accordance with the Interconnection Construction Service Agreement.

7.0 Provision of Interconnection Service. Transmission Provider and Interconnected Transmission Owner agree to provide for the interconnection to the Transmission System in the PJM Region of Interconnection Customer's Customer Facility identified in the Specifications in accordance with Part IV and Part VI of the Tariff, the Operating Agreement of PJM Interconnection, L.L.C. ("Operating Agreement"), and this ISA, as they may be amended from time to time.

8.0 Assumption of Tariff Obligations. Interconnection Customer agrees to abide by all rules and procedures pertaining to generation and transmission in the PJM Region, including but not limited to the rules and procedures concerning the dispatch of generation or scheduling transmission set forth in the Tariff, the Operating Agreement and the PJM Manuals.

9.0 Facilities Study. In analyzing and preparing the Facilities Study, and in designing and constructing the Attachment Facilities, Local Upgrades and/or Network Upgrades described in the Specifications attached to this ISA, Transmission Provider, the Interconnected Transmission Owner(s), and any other subcontractors employed by Transmission Provider have had to, and shall have to, rely on information provided by Interconnection Customer and possibly by third parties and may not have control over the accuracy of such information. Accordingly, NEITHER TRANSMISSION PROVIDER, THE INTERCONNECTED TRANSMISSION OWNER(s), NOR ANY OTHER

SUBCONTRACTORS EMPLOYED BY TRANSMISSION PROVIDER OR INTERCONNECTED TRANSMISSION OWNER MAKES ANY WARRANTIES, EXPRESS OR IMPLIED, WHETHER ARISING BY OPERATION OF LAW, COURSE OF PERFORMANCE OR DEALING, CUSTOM, USAGE IN THE TRADE OR PROFESSION, OR OTHERWISE, INCLUDING WITHOUT LIMITATION IMPLIED WARRANTIES OF MERCHANTABILITY AND FITNESS FOR A PARTICULAR PURPOSE, WITH REGARD TO THE ACCURACY, CONTENT, OR CONCLUSIONS OF THE FACILITIES STUDY OR THE SYSTEM IMPACT STUDY IF A FACILITIES STUDY WAS NOT REQUIRED OR OF THE ATTACHMENT FACILITIES, THE LOCAL UPGRADES AND/OR THE NETWORK UPGRADES, PROVIDED, HOWEVER, that Transmission Provider warrants that the Transmission Owner Interconnection Facilities and any Merchant Transmission Upgrades described in the Specifications will be designed and constructed (to the extent that Interconnected Transmission Owner is responsible for design and construction thereof) and operated in accordance with Good Utility Practice, as such term is defined in the Operating Agreement. Interconnection Customer acknowledges that it has not relied on any representations or warranties not specifically set forth herein and that no such representations or warranties have formed the basis of its bargain hereunder.

10.0 Construction of Transmission Owner Interconnection Facilities

10.1. Cost Responsibility. Interconnection Customer shall be responsible for and shall pay upon demand all Costs associated with the interconnection of the Customer Facility as specified in the Tariff. These Costs may include, but are not limited to, an Attachment Facilities charge, a Local Upgrades charge, a Network Upgrades charge and other charges. A description of the facilities required and an estimate of the Costs of these facilities are included in Sections 3.0 and 4.0 of the Specifications to this ISA.

10.2. Billing and Payments. Transmission Provider shall bill the Interconnection Customer for the Costs associated with the facilities contemplated by this ISA, estimates of which are set forth in the Specifications to this ISA, and the Interconnection Customer shall pay such Costs, in accordance with Section 11 of Appendix 2 to this ISA and the applicable Interconnection Construction Service Agreement. Upon receipt of each of Interconnection Customer's payments of such bills, Transmission Provider shall reimburse the applicable Interconnected Transmission Owner. Pursuant to Section 212.4 of the Tariff, Interconnection Customer requests that Transmission Provider provide a quarterly cost reconciliation:

___X___ Yes

_____ No

10.3. Contract Option. In the event that the Interconnection Customer and Interconnected Transmission Owner agree to utilize the Negotiated Contract Option provided by

the Interconnection Construction Service Agreement to establish, subject to FERC acceptance, non-standard terms regarding cost responsibility, payment, billing and/or financing, the terms of Sections 10.1 and/or 10.2 of this Section 10.0 shall be superseded to the extent required to conform to such negotiated terms, as stated in a schedule attached to the parties' Interconnection Construction Service Agreement relating to interconnection of the Customer Facility.

10.4 In the event that the Interconnection Customer elects to construct some or all of the Transmission Owner Interconnection Facilities under the Option to Build of the Interconnection Construction Service Agreement, billing and payment for the Costs associated with the facilities contemplated by this ISA shall relate only to such portion of the Interconnection Facilities as the Interconnected Transmission Owner is responsible for building.

11.0 Interconnection Specifications

11.1 Point of Interconnection. The Point of Interconnection shall be as identified on the one-line diagram attached as Schedule B to this ISA.

11.2 List and Ownership of Interconnection Facilities. The Interconnection Facilities to be constructed and ownership of the components thereof are identified in Section 3.0 of the Specifications attached to this ISA.

11.3 Ownership and Location of Metering Equipment. The Metering Equipment to be constructed, the capability of the Metering Equipment to be constructed, and the ownership thereof, are identified on the attached Schedule C to this ISA.

11.4 Applicable Technical Standards. The Applicable Technical Requirements and Standards that apply to the Customer Facility and the Interconnection Facilities are identified in Schedule D to this ISA.

12.0 Power Factor Requirement.

Consistent with Section 4.7 of Appendix 2 to this ISA, the power factor requirement is as follows:

The Generation Interconnection Customer shall design its non-synchronous Customer Facility with the ability to maintain a power factor of at least 0.95 leading to 0.95 lagging measured at the high side of the facility substation transformers.

13.0 Charges. In accordance with Sections 10 and 11 of Appendix 2 to this ISA, the Interconnection Customer shall pay to the Transmission Provider the charges applicable after Initial Operation, as set forth in Schedule E to this ISA. Promptly after receipt of such payments, the Transmission Provider shall forward such payments to the appropriate Interconnected Transmission Owner.

14.0 Third Party Beneficiaries. No third party beneficiary rights are created under this ISA, except, however, that, subject to modification of the payment terms stated in Section 10 of this ISA pursuant to the Negotiated Contract Option, payment obligations imposed on Interconnection Customer under this ISA are agreed and acknowledged to be for the benefit of the Interconnected Transmission Owner(s). Interconnection Customer expressly agrees that the Interconnected Transmission Owner(s) shall be entitled to take such legal recourse as it deems appropriate against Interconnection Customer for the payment of any Costs or charges authorized under this ISA or the Tariff with respect to Interconnection Service for which Interconnection Customer fails, in whole or in part, to pay as provided in this ISA, the Tariff and/or the Operating Agreement.

15.0 Waiver. No waiver by either party of one or more defaults by the other in performance of any of the provisions of this ISA shall operate or be construed as a waiver of any other or further default or defaults, whether of a like or different character.

16.0 Amendment. This ISA or any part thereof, may not be amended, modified, or waived other than by a written document signed by all parties hereto.

17.0 Construction With Other Parts Of The Tariff. This ISA shall not be construed as an application for service under Part II or Part III of the Tariff.

18.0 Notices. Any notice or request made by either party regarding this ISA shall be made, in accordance with the terms of Appendix 2 to this ISA, to the representatives of the other party and as applicable, to the Interconnected Transmission Owner(s), as indicated below:

Transmission Provider:

PJM Interconnection, L.L.C.
2750 Monroe Blvd.
Audubon, PA 19403

Interconnection Customer:

Nottingham Solar LLC
c/o Energix Renewables
1201 Wilson Blvd., Suite 2200
Arlington, VA 22209
Attn: Nottingham Development Team
Wylie Levone - wylie.levone@energixrenewables.com
Harshal Devani - harshal.devani@energixrenewables.com
Notices-US@EnergixRenewables.com
Legal-US@EnergixRenewables.com
703-373-7309

Interconnected Transmission Owner:

Interconnection Services
American Electric Power Service Corporation
1 Riverside Plaza
Columbus, OH 43215
Attn: Evan Wilcox - Managing Director, or successor
Email: pjmrequest@aep.com
Phone: 614-716-1000

With copies to:

Assistant General Counsel – Transactions
American Electric Power Service Corporation
1 Riverside Plaza
Columbus, OH 43215
Email: legalnoticesinterconnections@aep.com

19.0 Incorporation Of Other Documents. All portions of the Tariff and the Operating Agreement pertinent to the subject matter of this ISA and not otherwise made a part hereof are hereby incorporated herein and made a part hereof.

20.0 Addendum of Non-Standard Terms and Conditions for Interconnection Service. Subject to FERC approval, the parties agree that the terms and conditions set forth in Schedule F hereto are hereby incorporated herein by reference and be made a part of this ISA. In the event of any conflict between a provision of Schedule F that FERC has accepted and any provision of Appendix 2 to this ISA that relates to the same subject matter, the pertinent provision of Schedule F shall control.

21.0 Addendum of Interconnection Customer's Agreement to Conform with IRS Safe Harbor Provisions for Non-Taxable Status. To the extent required, in accordance with Section 24.1 of Appendix 2 to this ISA, Schedule G to this ISA shall set forth the Interconnection Customer's agreement to conform with the IRS safe harbor provisions for non-taxable status.

22.0 Addendum of Interconnection Requirements for all Wind or Non-synchronous Generation Facilities. To the extent required, Schedule H to this ISA sets forth interconnection requirements for a wind or non-synchronous generation facilities and is hereby incorporated by reference and made a part of this ISA.

23.0 All interconnection parties agree to comply with all infrastructure security requirements of the North American Electric Reliability Corporation.

IN WITNESS WHEREOF, Transmission Provider, Interconnection Customer and Interconnected Transmission Owner have caused this ISA to be executed by their respective authorized officials.

(PJM Queue Position #AE2-290)

Transmission Provider: **PJM Interconnection, L.L.C.**

By: _____ _____ _____
Name Title Date

Printed name of signer: _____

Interconnection Customer: **Nottingham Solar LLC**

By: _____ _____ _____
Name Title Date

Printed name of signer: _____

Interconnected Transmission Owner: **AEP Ohio Transmission Company, Inc.**

By: _____ _____ _____
Name Title Date

Printed name of signer: _____

All signature lines intentionally left blank. See Agreement to Amend executed by the parties on September 23, 2026.

SPECIFICATIONS FOR
INTERCONNECTION SERVICE AGREEMENT
By and Among
PJM INTERCONNECTION, L.L.C.
And
Nottingham Solar LLC
And
AEP Ohio Transmission Company, Inc.
(PJM Queue Position # AE2-290)

1.0 Description of generating unit(s) (the Customer Facility) to be interconnected with the Transmission System in the PJM Region:

a. Name of Customer Facility:

Nottingham Solar

b. Location of Customer Facility:

Harrison County, Ohio
GPS Coordinates: 40.189455, -81.041113

c. Size in megawatts of Customer Facility:

For Generation Interconnection Customer:

Maximum Facility Output of 100 MW

d. Description of the equipment configuration:

A solar Generating Facility consisting of 32 x 3.51 MW HEM FS3510M inverters, solar panels supporting 100 MWE. The Generating Facility will also include circuit breakers and/or switches required for the Generating Facility, protection and control relays and any associated enclosure and 1 x 75/105/125 MVA main power transformer with a high-side voltage of 138 kV.

2.0 Rights

2.1 Capacity Interconnection Rights:

Pursuant to and subject to the applicable terms of the Tariff, the Interconnection Customer shall have Capacity Interconnection Rights at the Point(s) of Interconnection specified in this Interconnection Service Agreement in the amount of 60 MW.

2.1a To the extent that any portion of the Customer Facility described in section 1.0 is not a Capacity Resource with Capacity Interconnection Rights, such portion of the Customer Facility shall be an Energy Resource. PJM reserves the right to limit

total injections to the Maximum Facility Output in the event reliability would be affected by output greater than such quantity.

2.3 Incremental Deliverability Rights:

Pursuant to Section 235 of the Tariff, Interconnection Customer shall have Incremental Deliverability Rights at each indicated Point of Interconnection in the following quantity(ies): None

2.4 Incremental Available Transfer Capability Revenue Rights:

Pursuant to Section 233 of the Tariff, Interconnection Customer shall have Incremental Available Transfer Capability Revenue Rights at each indicated Point of Interconnection in the following quantities: None

2.5 Incremental Auction Revenue Rights:

Pursuant to Section 231 of the Tariff, Interconnection Customer shall have Incremental Auction Revenue Rights in the following quantities: None

2.6 Incremental Capacity Transfer Rights:

Pursuant to Section 234 of the Tariff, Interconnection Customer shall have Incremental Capacity Transfer Rights between the following associated source(s) and sink(s) in the indicated quantities: None

3.0 Construction Responsibility and Ownership of Interconnection Facilities

a. Interconnection Customer.

(1) Interconnection Customer shall construct and, unless otherwise indicated, shall own, the following Interconnection Facilities:

- One (1) 138/34.5 kV grounded wye / grounded wye main step-up transformer;
- One (1) 138 kV circuit breaker;
- 138 kV generator lead transmission line from the step-up transformer to the Point of Interconnection;
- Fiber-optic cable from the Point of Interconnection to the generator collector station;
- Relay and protective equipment, supervisory control and data acquisition (SCADA) equipment, fiber-optic equipment, and telecommunications equipment; and

- Necessary metering equipment as specified in Schedule C of this ISA.

(2) In the event that, in accordance with the Interconnection Construction Service Agreement, Interconnection Customer has exercised the Option to Build, it is hereby permitted to build in accordance with and subject to the conditions and limitations set forth in that Section, the following portions of the Transmission Owner Interconnection Facilities which constitute or are part of the Customer Facility:

None

Ownership of the facilities built by Interconnection Customer pursuant to the Option to Build shall be as provided in the Interconnection Construction Service Agreement.

b. Interconnected Transmission Owner

Attachment Facilities:

- Construct one (1) 138 kV generator lead transmission line span from the Nottingham 138 kV Station to the Point of Interconnection, including the first structure outside the Nottingham 138 kV Station, install 138 kV revenue meter, and extend dual fiber-optic from the Point of Interconnection to the Nottingham 138 kV Station control house. **(PJM Network Upgrade n7452)**

Non-Direct Connection Network Upgrades:

- Expand Nottingham 138 kV Station, including the addition of two (2) 138 kV circuit breakers, installation of associated protection and control equipment, 138 kV line risers, and supervisory control and data acquisition (SCADA) equipment. (**PJM Network Upgrade n7453**)

4.0 Subject to modification pursuant to the Negotiated Contract Option and/or the Option to Build under the Interconnection Construction Service Agreement, Interconnection Customer shall be subject to the estimated charges detailed below, which shall be billed and paid in accordance with Appendix 2, Section 11 of this ISA and the applicable Interconnection Construction Service Agreement.

4.1 Attachment Facilities Charge: $1,783,043.00

4.2 Network Upgrades Charge: $2,882,021.00

4.3 Local Upgrades Charge: $0

4.4 Other Charges: $0

4.5 Cost breakdown:

$2,187,038.00	Direct Labor
$1,829,699.00	Direct Material
$648,327.00	Indirect Labor
$0	Indirect Material
$4,665,064.00	Total

4.6 Security Amount Breakdown:

$2,882,021.00 Estimated Cost of Non-Direct Connection Local Upgrades and/or Non-Direct Connection Network Upgrades

plus $207,273.00 Estimated cost of the work (for the first three months after construction commences in earnest) on the required Attachment Facilities, Direct Connection Local Upgrades, and Direct Connection Network Upgrades

plus $0 Option to Build Security for Transmission Owner Attachment Facilities and Direct Connection Network Upgrades (including Cancellation Costs)

$3,089,294.00 Total Security required with ISA

less $0 Costs already paid by Interconnection Customer

$3,089,294.00 Total Security required with ISA

APPENDICES:

- **APPENDIX 1 - DEFINITIONS**
- **APPENDIX 2 - STANDARD TERMS AND CONDITIONS FOR INTERCONNECTIONS**

SCHEDULES:

- **SCHEDULE A - CUSTOMER FACILITY LOCATION/SITE PLAN**
- **SCHEDULE B - SINGLE-LINE DIAGRAM**
- **SCHEDULE C - LIST OF METERING EQUIPMENT**
- **SCHEDULE D - APPLICABLE TECHNICAL REQUIREMENTS AND STANDARDS**
- **SCHEDULE E - SCHEDULE OF CHARGES**
- **SCHEDULE F - SCHEDULE OF NON-STANDARD TERMS & CONDITIONS**
- **SCHEDULE G - INTERCONNECTION CUSTOMER'S AGREEMENT TO CONFORM WITH IRS SAFE HARBOR PROVISIONS FOR NON-TAXABLE STATUS**
- **SCHEDULE H - INTERCONNECTION REQUIREMENTS FOR A WIND GENERATION FACILITY**
- **SCHEDULE I – INTERCONNECTION SPECIFICATIONS FOR AN ENERGY STORAGE RESOURCE**
- **SCHEDULE J – SCHEDULE OF TERMS AND CONDITIONS FOR SURPLUS INTERCONNECTION SERVICE**
- **SCHEDULE K – REQUIREMENTS FOR INTERCONNECTION SERVICE BELOW FULL ELECTRICAL GENERATING CAPABILITY**

APPENDIX 1

DEFINITIONS

From the PJM Tariff accepted for filing by the Commission as of the effective date of this agreement

Unless the context otherwise specifies or requires, capitalized terms used in this Agreement shall have the respective meanings set forth below. Unless otherwise specified, all references herein to sections, Schedules or Appendices are to sections, Schedules or Appendices of this Agreement.

Abnormal Condition:

"Abnormal Condition" shall mean any condition on the Interconnection Facilities which, determined in accordance with Good Utility Practice, is: (i) outside normal operating parameters such that facilities are operating outside their normal ratings or that reasonable operating limits have been exceeded; and (ii) could reasonably be expected to materially and adversely affect the safe and reliable operation of the Interconnection Facilities; but which, in any case, could reasonably be expected to result in an Emergency Condition. Any condition or situation that results from lack of sufficient generating capacity to meet load requirements or that results solely from economic conditions shall not, standing alone, constitute an Abnormal Condition.

Affected System:

"Affected System" shall mean an electric system other than the Transmission Provider's Transmission System that may be affected by a proposed interconnection or on which a proposed interconnection or addition of facilities or upgrades may require modifications or upgrades to the Transmission System.

Affiliate:

"Affiliate" shall mean any two or more entities, one of which Controls the other or that are under common Control. "Control," as that term is used in this definition, shall mean the possession, directly or indirectly, of the power to direct the management or policies of an entity. Ownership of publicly-traded equity securities of another entity shall not result in Control or affiliation for purposes of the Tariff or Operating Agreement if the securities are held as an investment, the holder owns (in its name or via intermediaries) less than 10 percent (10%) of the outstanding securities of the entity, the holder does not have representation on the entity's board of directors (or equivalent managing entity) or vice versa, and the holder does not in fact exercise influence over day-to-day management decisions. Unless the contrary is demonstrated to the satisfaction of the Members Committee, Control shall be presumed to arise from the ownership of or the power to vote, directly or indirectly, ten percent or more of the voting securities of such entity.

Ancillary Services:

"Ancillary Services" shall mean those services that are necessary to support the transmission of capacity and energy from resources to loads while maintaining reliable operation of the Transmission Provider's Transmission System in accordance with Good Utility Practice.

Applicable Laws and Regulations:

"Applicable Laws and Regulations" shall mean all duly promulgated applicable federal, State and local laws, regulations, rules, ordinances, codes, decrees, judgments, directives, or judicial or

administrative orders, permits and other duly authorized actions of any Governmental Authority having jurisdiction over the relevant parties, their respective facilities, and/or the respective services they provide.

Applicable Regional Entity:

"Applicable Regional Entity" shall mean the Regional Entity for the region in which a Network Customer, Transmission Customer, New Service Customer, or Transmission Owner operates.

Applicable Standards:

"Applicable Standards" shall mean the requirements and guidelines of NERC, the Applicable Regional Entity, and the Control Area in which the Customer Facility is electrically located; the PJM Manuals; and Applicable Technical Requirements and Standards.

Applicable Technical Requirements and Standards:

"Applicable Technical Requirements and Standards" shall mean those certain technical requirements and standards applicable to interconnections of generation and/or transmission facilities with the facilities of an Interconnected Transmission Owner or, as the case may be and to the extent applicable, of an Electric Distributor, as published by Transmission Provider in a PJM Manual provided, however, that, with respect to any generation facilities with maximum generating capacity of 2 MW or less *(synchronous) or 5 MW or less (inverter-based)* for which the Interconnection Customer executes a Construction Service Agreement or Interconnection Service Agreement on or after March 19, 2005, "Applicable Technical Requirements and Standards" shall refer to the "PJM Small Generator Interconnection Applicable Technical Requirements and Standards." All Applicable Technical Requirements and Standards shall be publicly available through postings on Transmission Provider's internet website.

Attachment Facilities:

"Attachment Facilities" shall mean the facilities necessary to physically connect a Customer Facility to the Transmission System or interconnected distribution facilities.

Behind The Meter Generation:

"Behind The Meter Generation" shall refer to a generation unit that delivers energy to load without using the Transmission System or any distribution facilities (unless the entity that owns or leases the distribution facilities has consented to such use of the distribution facilities and such consent has been demonstrated to the satisfaction of the Office of the Interconnection); provided, however, that Behind The Meter Generation does not include (i) at any time, any portion of such generating unit's capacity that is designated as a Generation Capacity Resource; or (ii) in an hour, any portion of the output of such generating unit that is sold to another entity for consumption at another electrical location or into the PJM Interchange Energy Market.

Breach:

"Breach" shall mean the failure of a party to perform or observe any material term or condition of Tariff, Part IV or Tariff, Part VI, or any agreement entered into thereunder as described in the relevant provisions of such agreement.

Breaching Party:

"Breaching Party" shall mean a party that is in Breach of Tariff, Part IV or Tariff, Part VI and/or an agreement entered into thereunder.

Business Day:

"Business Day" shall mean a day in which the Federal Reserve System is open for business and is not a scheduled PJM holiday.

Cancellation Costs:

"Cancellation Costs" shall mean costs and liabilities incurred in connection with: (a) cancellation of supplier and contractor written orders and agreements entered into to design, construct and install Attachment Facilities, Direct Assignment Facilities and/or Customer-Funded Upgrades, and/or (b) completion of some or all of the required Attachment Facilities, Direct Assignment Facilities and/or Customer-Funded Upgrades, or specific unfinished portions and/or removal of any or all of such facilities which have been installed, to the extent required for the Transmission Provider and/or Transmission Owner(s) to perform their respective obligations under Tariff, Part IV and/or Part VI.

Capacity:

"Capacity" shall mean the installed capacity requirement of the Reliability Assurance Agreement or similar such requirements as may be established.

Capacity Interconnection Rights:

"Capacity Interconnection Rights" shall mean the rights to input generation as a Generation Capacity Resource into the Transmission System at the Point of Interconnection where the generating facilities connect to the Transmission System.

Capacity Resource:

"Capacity Resource" shall have the meaning provided in the Reliability Assurance Agreement.

Commencement Date:

"Commencement Date" shall mean the date on which Interconnection Service commences in accordance with an Interconnection Service Agreement.

Confidential Information:

"Confidential Information" shall mean any confidential, proprietary, or trade secret information of a plan, specification, pattern, procedure, design, device, list, concept, policy, or compilation relating to the present or planned business of a New Service Customer, Transmission Owner, or other Interconnection Party or Construction Party, which is designated as confidential by the party supplying the information, whether conveyed verbally, electronically, in writing, through inspection, or otherwise, and shall include, without limitation, all information relating to the producing party's technology, research and development, business affairs and pricing, and any information supplied by any New Service Customer, Transmission Owner, or other Interconnection Party or Construction Party to another such party prior to the execution of an Interconnection Service Agreement or a Construction Service Agreement.

Consolidated Transmission Owners Agreement, PJM Transmission Owners Agreement or Transmission Owners Agreement:

"Consolidated Transmission Owners Agreement," "PJM Transmission Owners Agreement" or "Transmission Owners Agreement" shall mean the certain Consolidated Transmission Owners Agreement dated as of December 15, 2005, by and among the Transmission Owners and by and between the Transmission Owners and PJM Interconnection, L.L.C. on file with the Commission, as amended from time to time.

Constructing Entity:

"Constructing Entity" shall mean either the Transmission Owner or the New Services Customer, depending on which entity has the construction responsibility pursuant to Tariff, Part VI and the applicable Construction Service Agreement; this term shall also be used to refer to an Interconnection Customer with respect to the construction of the Customer Interconnection Facilities.

Construction Party:

"Construction Party" shall mean a party to a Construction Service Agreement. "Construction Parties" shall mean all of the Parties to a Construction Service Agreement.

Construction Service Agreement:

"Construction Service Agreement" shall mean either an Interconnection Construction Service Agreement or an Upgrade Construction Service Agreement.

Contingent Facilities:

"Contingent Facilities" shall mean those unbuilt Interconnection Facilities and Network Upgrades upon which the Interconnection Request's costs, timing, and study findings are dependent and, if delayed or not built, could cause a need for restudies of the Interconnection Request or a reassessment of the Interconnection Facilities and/or Network Upgrades and/or costs and timing.

Control Area:

"Control Area" shall mean an electric power system or combination of electric power systems bounded by interconnection metering and telemetry to which a common automatic generation control scheme is applied in order to:

(1) match the power output of the generators within the electric power system(s) and energy purchased from entities outside the electric power system(s), with the load within the electric power system(s);

(2) maintain scheduled interchange with other Control Areas, within the limits of Good Utility Practice;

(3) maintain the frequency of the electric power system(s) within reasonable limits in accordance with Good Utility Practice; and

(4) provide sufficient generating capacity to maintain operating reserves in accordance with Good Utility Practice.

Controllable A.C. Merchant Transmission Facilities:

"Controllable A.C. Merchant Transmission Facilities" shall mean transmission facilities that (1) employ technology which Transmission Provider reviews and verifies will permit control of the amount and/or direction of power flow on such facilities to such extent as to effectively enable the controllable facilities to be operated as if they were direct current transmission facilities, and (2) that are interconnected with the Transmission System pursuant to Tariff, Part IV and Part VI.

Costs:

As used in Tariff, Part IV, Part VI and related attachments, "Costs" shall mean costs and expenses, as estimated or calculated, as applicable, including, but not limited to, capital expenditures, if applicable, and overhead, return, and the costs of financing and taxes and any Incidental Expenses.

Customer Facility:

"Customer Facility" shall mean Generation Facilities or Merchant Transmission Facilities interconnected with or added to the Transmission System pursuant to an Interconnection Request under Subpart A of Tariff, Part IV.

Customer Interconnection Facilities:

"Customer Interconnection Facilities" shall mean all facilities and equipment owned and/or controlled, operated and maintained by Interconnection Customer on Interconnection Customer's side of the Point of Interconnection identified in the appropriate appendices to the Interconnection Service Agreement and to the Interconnection Construction Service Agreement, including any

modifications, additions, or upgrades made to such facilities and equipment, that are necessary to physically and electrically interconnect the Customer Facility with the Transmission System.

Default:

As used in the Interconnection Service Agreement and Construction Service Agreement, "Default" shall mean the failure of a Breaching Party to cure its Breach in accordance with the applicable provisions of an Interconnection Service Agreement or Construction Service Agreement.

Emergency Condition:

"Emergency Condition" shall mean a condition or situation (i) that in the judgment of any Interconnection Party is imminently likely to endanger life or property; or (ii) that in the judgment of the Interconnected Transmission Owner or Transmission Provider is imminently likely (as determined in a non-discriminatory manner) to cause a material adverse effect on the security of, or damage to, the Transmission System, the Interconnection Facilities, or the transmission systems or distribution systems to which the Transmission System is directly or indirectly connected; or (iii) that in the judgment of Interconnection Customer is imminently likely (as determined in a non-discriminatory manner) to cause damage to the Customer Facility or to the Customer Interconnection Facilities. System restoration and black start shall be considered Emergency Conditions, provided that a Generation Interconnection Customer is not obligated by an Interconnection Service Agreement to possess black start capability. Any condition or situation that results from lack of sufficient generating capacity to meet load requirements or that results solely from economic conditions shall not constitute an Emergency Condition, unless one or more of the enumerated conditions or situations identified in this definition also exists.

Energy Resource:

"Energy Resource" shall mean a Generating Facility that is not a Capacity Resource.

Energy Storage Resource:

"Energy Storage Resource" shall mean a resource capable of receiving electric energy from the grid and storing it for later injection to the grid that participates in the PJM Energy, Capacity and/or Ancillary Services markets as a Market Participant.

Facilities Study:

"Facilities Study" shall be an engineering study conducted by the Transmission Provider (in coordination with the affected Transmission Owner(s)) to: (1) determine the required modifications to the Transmission Provider's Transmission System necessary to implement the conclusions of the System Impact Study; and (2) complete any additional studies or analyses documented in the System Impact Study or required by PJM Manuals, and determine the required modifications to the Transmission Provider's Transmission System based on the conclusions of such additional studies. The Facilities Study shall include the cost and scheduled completion date for such modifications, that will be required to provide the requested transmission service or to

accommodate a New Service Request. As used in the Interconnection Service Agreement or Construction Service Agreement, Facilities Study shall mean that certain Facilities Study conducted by Transmission Provider (or at its direction) to determine the design and specification of the Customer Funded Upgrades necessary to accommodate the New Service Customer's New Service Request in accordance with Tariff, Part VI, section 207.

Federal Power Act:

"Federal Power Act" shall mean the Federal Power Act, as amended, 16 U.S.C. §§ 791a, et seq.

FERC or Commission:

"FERC" or "Commission" shall mean the Federal Energy Regulatory Commission or any successor federal agency, commission or department exercising jurisdiction over the Tariff, Operating Agreement and Reliability Assurance Agreement.

Generating Facilities:

"Generating Facilities" shall mean Interconnection Customer's device for the production and/or storage for later injection of electricity identified in the Interconnection Request, but shall not include the Interconnection Customer's Interconnection Facilities.

Generation Interconnection Customer:

"Generation Interconnection Customer" shall mean an entity that submits an Interconnection Request to interconnect a new generation facility or to increase the capacity of an existing generation facility interconnected with the Transmission System in the PJM Region.

Generation Interconnection Request:

"Generation Interconnection Request" shall mean a request by a Generation Interconnection Customer pursuant to Tariff, Part IV, subpart A, to interconnect a generating unit with the Transmission System or to increase the capacity of a generating unit interconnected with the Transmission System in the PJM Region.

Good Utility Practice:

"Good Utility Practice" shall mean any of the practices, methods and acts engaged in or approved by a significant portion of the electric utility industry during the relevant time period, or any of the practices, methods and acts which, in the exercise of reasonable judgment in light of the facts known at the time the decision was made, could have been expected to accomplish the desired result at a reasonable cost consistent with good business practices, reliability, safety and expedition. Good Utility Practice is not intended to be limited to the optimum practice, method, or act to the exclusion of all others, but rather is intended to include acceptable practices, methods, or acts generally accepted in the region; including those practices required by Federal Power Act, section 215(a)(4).

Governmental Authority:

"Governmental Authority" shall mean any federal, state, local or other governmental, regulatory or administrative agency, court, commission, department, board, or other governmental subdivision, legislature, rulemaking board, tribunal, arbitrating body, or other governmental authority having jurisdiction over any Interconnection Party or Construction Party or regarding any matter relating to an Interconnection Service Agreement or Construction Service Agreement, as applicable.

Hazardous Substances:

"Hazardous Substance" shall mean any chemicals, materials or substances defined as or included in the definition of "hazardous substances," "hazardous wastes," "hazardous materials," "hazardous constituents," "restricted hazardous materials," "extremely hazardous substances," "toxic substances," "radioactive substances," "contaminants," "pollutants," "toxic pollutants" or words of similar meaning and regulatory effect under any applicable Environmental Law, or any other chemical, material or substance, exposure to which is prohibited, limited or regulated by any applicable Environmental Law.

Incremental Auction Revenue Rights:

"Incremental Auction Revenue Rights" shall mean the additional Auction Revenue Rights, not previously feasible, created by the addition of Incremental Rights-Eligible Required Transmission Enhancements, Merchant Transmission Facilities, or of one or more Customer-Funded Upgrades.

Incremental Available Transfer Capability Revenue Rights:

"Incremental Available Transfer Capability Revenue Rights" shall mean the rights to revenues that are derived from incremental Available Transfer Capability created by the addition of Merchant Transmission Facilities or of one of more Customer-Funded Upgrades.

Incremental Capacity Transfer Right:

"Incremental Capacity Transfer Right" shall mean a Capacity Transfer Right allocated to a Generation Interconnection Customer or Transmission Interconnection Customer obligated to fund a transmission facility or upgrade, to the extent such upgrade or facility increases the transmission import capability into a Locational Deliverability Area, or a Capacity Transfer Right allocated to a Responsible Customer in accordance with Tariff, Schedule 12A.

Incremental Deliverability Rights (IDRs):

"Incremental Deliverability Rights" or "IDRs" shall mean the rights to the incremental ability, resulting from the addition of Merchant Transmission Facilities, to inject energy and capacity at a point on the Transmission System, such that the injection satisfies the deliverability requirements of a Capacity Resource. Incremental Deliverability Rights may be obtained by a generator or a

Generation Interconnection Customer, pursuant to an IDR Transfer Agreement, to satisfy, in part, the deliverability requirements necessary to obtain Capacity Interconnection Rights.

Initial Operation:

"Initial Operation" shall mean the commencement of operation of the Customer Facility and Customer Interconnection Facilities after satisfaction of the conditions of Tariff, Attachment O-Appendix 2, section 1.4 (an Interconnection Service Agreement).

Interconnected Entity:

"Interconnected Entity" shall mean either the Interconnection Customer or the Interconnected Transmission Owner; Interconnected Entities shall mean both of them.

Interconnected Transmission Owner:

"Interconnected Transmission Owner" shall mean the Transmission Owner to whose transmission facilities or distribution facilities Customer Interconnection Facilities are, or as the case may be, a Customer Facility is, being directly connected. When used in an Interconnection Construction Service Agreement, the term may refer to a Transmission Owner whose facilities must be upgraded pursuant to the Facilities Study, but whose facilities are not directly interconnected with those of the Interconnection Customer.

Interconnection Construction Service Agreement:

"Interconnection Construction Service Agreement" shall mean the agreement entered into by an Interconnection Customer, Interconnected Transmission Owner and the Transmission Provider pursuant to Tariff, Part VI, Subpart B and in the form set forth in Tariff, Attachment P, relating to construction of Attachment Facilities, Network Upgrades, and/or Local Upgrades and coordination of the construction and interconnection of an associated Customer Facility. A separate Interconnection Construction Service Agreement will be executed with each Transmission Owner that is responsible for construction of any Attachment Facilities, Network Upgrades, or Local Upgrades associated with interconnection of a Customer Facility.

Interconnection Customer:

"Interconnection Customer" shall mean a Generation Interconnection Customer and/or a Transmission Interconnection Customer.

Interconnection Facilities:

"Interconnection Facilities" shall mean the Transmission Owner Interconnection Facilities and the Customer Interconnection Facilities.

Interconnection Party:

"Interconnection Party" shall mean a Transmission Provider, Interconnection Customer, or the Interconnected Transmission Owner. Interconnection Parties shall mean all of them.

Interconnection Request:

"Interconnection Request" shall mean a Generation Interconnection Request, a Transmission Interconnection Request and/or an IDR Transfer Agreement.

Interconnection Service:

"Interconnection Service" shall mean the physical and electrical interconnection of the Customer Facility with the Transmission System pursuant to the terms of Tariff, Part IV and Tariff, Part VI and the Interconnection Service Agreement entered into pursuant thereto by Interconnection Customer, the Interconnected Transmission Owner and Transmission Provider.

Interconnection Service Agreement:

"Interconnection Service Agreement" shall mean an agreement among the Transmission Provider, an Interconnection Customer and an Interconnected Transmission Owner regarding interconnection under Tariff, Part IV and Tariff, Part VI.

List of Approved Contractors:

"List of Approved Contractors" shall mean a list developed by each Transmission Owner and published in a PJM Manual of (a) contractors that the Transmission Owner considers to be qualified to install or construct new facilities and/or upgrades or modifications to existing facilities on the Transmission Owner's system, provided that such contractors may include, but need not be limited to, contractors that, in addition to providing construction services, also provide design and/or other construction-related services, and (b) manufacturers or vendors of major transmission-related equipment (e.g., high-voltage transformers, transmission line, circuit breakers) whose products the Transmission Owner considers acceptable for installation and use on its system.

Load Serving Entity (LSE):

"Load Serving Entity" or "LSE" shall have the meaning specified in the Reliability Assurance Agreement.

Local Upgrades:

"Local Upgrades" shall mean modifications or additions of facilities to abate any local thermal loading, voltage, short circuit, stability or similar engineering problem caused by the interconnection and delivery of generation to the Transmission System. Local Upgrades shall include:

(i) Direct Connection Local Upgrades which are Local Upgrades that only serve the

Customer Interconnection Facility and have no impact or potential impact on the Transmission System until the final tie-in is complete; and

(ii) Non-Direct Connection Local Upgrades which are parallel flow Local Upgrades that are not Direct Connection Local Upgrades.

Material Modification:

"Material Modification" shall mean any modification to an Interconnection Request that has a material adverse effect on the cost or timing of Interconnection Studies related to, or any Network Upgrades or Local Upgrades needed to accommodate, any Interconnection Request with a later Queue Position.

Maximum Facility Output:

"Maximum Facility Output" shall mean the maximum (not nominal) net electrical power output in megawatts, specified in the Interconnection Service Agreement, after supply of any parasitic or host facility loads, that a Generation Interconnection Customer's Customer Facility is expected to produce, provided that the specified Maximum Facility Output shall not exceed the output of the proposed Customer Facility that Transmission Provider utilized in the System Impact Study.

Maximum State of Charge:

"Maximum State of Charge" shall mean the maximum State of Charge that should not be exceeded, measured in units of megawatt-hours.

Merchant A.C. Transmission Facilities:

"Merchant A.C. Transmission Facility" shall mean Merchant Transmission Facilities that are alternating current (A.C.) transmission facilities, other than those that are Controllable A.C. Merchant Transmission Facilities.

Merchant D.C. Transmission Facilities:

"Merchant D.C. Transmission Facilities" shall mean direct current (D.C.) transmission facilities that are interconnected with the Transmission System pursuant to Tariff, Part IV and Tariff, Part VI.

Merchant Network Upgrades:

"Merchant Network Upgrades" shall mean additions to, or modifications or replacements of, physical facilities of the Interconnected Transmission Owner that, on the date of the pertinent Transmission Interconnection Customer's Upgrade Request, are part of the Transmission System or are included in the Regional Transmission Expansion Plan.

Merchant Transmission Facilities:

"Merchant Transmission Facilities" shall mean A.C. or D.C. transmission facilities that are interconnected with or added to the Transmission System pursuant to Tariff, Part IV and Tariff, Part VI and that are so identified in Tariff, Attachment T, provided, however, that Merchant Transmission Facilities shall not include (i) any Customer Interconnection Facilities, (ii) any physical facilities of the Transmission System that were in existence on or before March 20, 2003 ; (iii) any expansions or enhancements of the Transmission System that are not identified as Merchant Transmission Facilities in the Regional Transmission Expansion Plan and Tariff, Attachment T, or (iv) any transmission facilities that are included in the rate base of a public utility and on which a regulated return is earned.

Merchant Transmission Provider:

"Merchant Transmission Provider" shall mean an Interconnection Customer that (1) owns, controls, or controls the rights to use the transmission capability of, Merchant D.C. Transmission Facilities and/or Controllable A.C. Merchant Transmission Facilities that connect the Transmission System with another control area, (2) has elected to receive Transmission Injection Rights and Transmission Withdrawal Rights associated with such facility pursuant to Tariff, Part IV, section 36, and (3) makes (or will make) the transmission capability of such facilities available for use by third parties under terms and conditions approved by the Commission and stated in the Tariff, consistent with Tariff, Part IV, section 38.

Metering Equipment:

"Metering Equipment" shall mean all metering equipment installed at the metering points designated in the appropriate appendix to an Interconnection Service Agreement.

Minimum State of Charge:

"Minimum State of Charge" shall mean the minimum State of Charge that should be maintained in units of megawatt-hours.

NERC:

"NERC" shall mean the North American Electric Reliability Corporation or any successor thereto.

Network Upgrades:

"Network Upgrades" shall mean modifications or additions to transmission-related facilities that are integrated with and support the Transmission Provider's overall Transmission System for the general benefit of all users of such Transmission System. Network Upgrades shall include:

(i) **Direct Connection Network Upgrades** which are Network Upgrades that are not part of an Affected System; only serve the Customer Interconnection Facility; and have no impact or potential impact on the Transmission System until the final tie-in is complete. Both Transmission Provider and Interconnection Customer must agree as to what constitutes Direct Connection

Network Upgrades and identify them in the Interconnection Construction Service Agreement, Schedule D. If the Transmission Provider and Interconnection Customer disagree about whether a particular Network Upgrade is a Direct Connection Network Upgrade, the Transmission Provider must provide the Interconnection Customer a written technical explanation outlining why the Transmission Provider does not consider the Network Upgrade to be a Direcct Connection Network Upgrade within 15 days of its determination.

(ii) **Non-Direct Connection Network Upgrades** which are parallel flow Network Upgrades that are not Direct Connection Network Upgrades.

New Service Request:

"New Service Request" shall mean an Interconnection Request, a Completed Application, or an Upgrade Request.

New Services Queue:

"New Services Queue" shall mean all Interconnection Requests, Completed Applications, and Upgrade Requests that are received within each six-month period ending on March 31 and September 30 of each year shall collectively comprise a New Services Queue.

Nominal Rated Capability:

"Nominal Rated Capability" shall mean the nominal maximum rated capability in megawatts of a Transmission Interconnection Customer's Customer Facility or the nominal increase in transmission capability in megawatts of the Transmission System resulting from the interconnection or addition of a Transmission Interconnection Customer's Customer Facility, as determined in accordance with pertinent Applicable Standards and specified in the Interconnection Service Agreement.

Operating Agreement of the PJM Interconnection, L.L.C., Operating Agreement or PJM Operating Agreement:

"Operating Agreement of the PJM Interconnection, L.L.C.," "Operating Agreement" or "PJM Operating Agreement" shall mean the Amended and Restated Operating Agreement of PJM Interconnection, L.L.C. dated as of April 1, 1997 and as amended and restated as of June 2, 1997, including all Schedules, Exhibits, Appendices, addenda or supplements hereto, as amended from time to time thereafter, among the Members of the PJM Interconnection, L.L.C., on file with the Commission.

Option to Build:

"Option to Build" shall mean the option of the New Service Customer to build certain Customer-Funded Upgrades, as set forth in, and subject to the terms of, the Construction Service Agreement.

Part I:

"Part I" shall mean the Tariff Definitions and Common Service Provisions contained in Tariff, Part I, sections 1 through 12A.

Part II:

"Part II" shall mean Tariff, Part II, sections 13 through 27A pertaining to Point-To-Point Transmission Service in conjunction with the applicable Common Service Provisions of Tariff, Part I and appropriate Schedules and Attachments.

Part III:

"Part III" shall mean Tariff, Part III, sections 28 through 35 pertaining to Network Integration Transmission Service in conjunction with the applicable Common Service Provisions of Tariff, Part I and appropriate Schedules and Attachments.

Part IV:

"Part IV" shall mean Tariff, Part IV, sections 36 through 112C pertaining to generation or merchant transmission interconnection to the Transmission System in conjunction with the applicable Common Service Provisions of Tariff, Part I and appropriate Schedules and Attachments.

Part VI:

"Part VI" shall mean Tariff, Part VI, sections 200 through 237 pertaining to the queuing, study, and agreements relating to New Service Requests, and the rights associated with Customer-Funded Upgrades in conjunction with the applicable Common Service Provisions of Tariff, Part I and appropriate Schedules and Attachments.

Parties:

"Parties" shall mean the Transmission Provider, as administrator of the Tariff, and the Transmission Customer receiving service under the Tariff. PJMSettlement shall be the Counterparty to Transmission Customers.

PJM:

"PJM" shall mean PJM Interconnection, L.L.C., including the Office of the Interconnection as referenced in the PJM Operating Agreement. When such term is being used in the RAA it shall also include the PJM Board.

PJM Manuals:

"PJM Manuals" shall mean the instructions, rules, procedures and guidelines established by the Office of the Interconnection for the operation, planning, and accounting requirements of the PJM

Region and the PJM Interchange Energy Market.

PJM Region:

"PJM Region" shall have the meaning specified in the Operating Agreement.

PJM Tariff, Tariff, O.A.T.T., OATT or PJM Open Access Transmission Tariff:

"PJM Tariff," "Tariff," "O.A.T.T.," "OATT," or "PJM Open Access Transmission Tariff" shall mean that certain PJM Open Access Transmission Tariff, including any schedules, appendices or exhibits attached thereto, on file with FERC and as amended from time to time thereafter.

Point of Interconnection:

"Point of Interconnection" shall mean the point or points where the Customer Interconnection Facilities interconnect with the Transmission Owner Interconnection Facilities or the Transmission System.

Project Finance Entity:

"Project Finance Entity" shall mean: (a) a holder, trustee or agent for holders, of any component of Project Financing; or (b) any purchaser of capacity and/or energy produced by the Customer Facility to which Interconnection Customer has granted a mortgage or other lien as security for some or all of Interconnection Customer's obligations under the corresponding power purchase agreement.

Provisional Interconnection Service:

"Provisional Interconnection Service" shall mean interconnection service provided by Transmission Provider associated with interconnecting the Interconnection Customer's Generating Facility to Transmission Provider's Transmission System and enabling that Transmission System to receive electric energy and capacity from the Generating Facility at the Point of Interconnection, pursuant to the terms of the Interconnection Service Agreement and, if applicable, the Tariff.

Queue Position:

"Queue Position" shall mean the priority assigned to an Interconnection Request, a Completed Application, or an Upgrade Request pursuant to applicable provisions of Tariff, Part VI.

Reasonable Efforts:

"Reasonable Efforts" shall mean, with respect to any action required to be made, attempted, or taken by an Interconnection Party or by a Construction Party under Tariff, Part IV or Tariff, Part VI, an Interconnection Service Agreement, or a Construction Service Agreement, such efforts as are timely and consistent with Good Utility Practice and with efforts that such party would undertake for the protection of its own interests.

Regional Entity:

"Regional Entity" shall have the same meaning specified in the Operating Agreement.

Regional Transmission Expansion Plan:

"Regional Transmission Expansion Plan" shall mean the plan prepared by the Office of the Interconnection pursuant to Operating Agreement, Schedule 6 for the enhancement and expansion of the Transmission System in order to meet the demands for firm transmission service in the PJM Region.

Reliability Assurance Agreement or PJM Reliability Assurance Agreement:

"Reliability Assurance Agreement" or "PJM Reliability Assurance Agreement" shall mean that certain Reliability Assurance Agreement Among Load Serving Entities in the PJM Region, on file with FERC as PJM Interconnection L.L.C. Rate Schedule FERC No. 44, and as amended from time to time thereafter.

Schedule of Work:

"Schedule of Work" shall mean that schedule attached to the Interconnection Construction Service Agreement setting forth the timing of work to be performed by the Constructing Entity pursuant to the Interconnection Construction Service Agreement, based upon the Facilities Study and subject to modification, as required, in accordance with Transmission Provider's scope change process for interconnection projects set forth in the PJM Manuals.

Scope of Work:

"Scope of Work" shall mean that scope of the work attached as a schedule to the Interconnection Construction Service Agreement and to be performed by the Constructing Entity(ies) pursuant to the Interconnection Construction Service Agreement, provided that such Scope of Work may be modified, as required, in accordance with Transmission Provider's scope change process for interconnection projects set forth in the PJM Manuals.

Secondary Systems:

"Secondary Systems" shall mean control or power circuits that operate below 600 volts, AC or DC, including, but not limited to, any hardware, control or protective devices, cables, conductors, electric raceways, secondary equipment panels, transducers, batteries, chargers, and voltage and current transformers.

Security:

"Security" shall mean the security provided by the New Service Customer pursuant to Tariff, section 212.4 or Tariff, Part VI, section 213.4 to secure the New Service Customer's responsibility

for Costs under the Interconnection Service Agreement or Upgrade Construction Service Agreement and Tariff, Part VI, section 217.

Service Agreement:

"Service Agreement" shall mean the initial agreement and any amendments or supplements thereto entered into by the Transmission Customer and the Transmission Provider for service under the Tariff.

Site:

"Site" shall mean all of the real property, including but not limited to any leased real property and easements, on which the Customer Facility is situated and/or on which the Customer Interconnection Facilities are to be located.

State:

"State" shall mean the District of Columbia and any State or Commonwealth of the United States.

State of Charge:

"State of Charge" shall mean the operating parameter that represents the quantity of physical energy stored (measured in units of megawatt-hours) in an Energy Storage Resource Model Participant in proportion to its maximum State of Charge capability. State of Charge is quantified as defined in the PJM Manuals.

Station Power:

"Station Power" shall mean energy used for operating the electric equipment on the site of a generation facility located in the PJM Region or for the heating, lighting, air-conditioning and office equipment needs of buildings on the site of such a generation facility that are used in the operation, maintenance, or repair of the facility. Station Power does not include any energy (i) used to power synchronous condensers; (ii) used for pumping at a pumped storage facility; (iii) used in association with restoration or black start service; or (iv) that is Direct Charging Energy.

Surplus Interconnection Customer:

"Surplus Interconnection Customer" shall mean either an Interconnection Customer whose Generating Facility is already interconnected to the PJM Transmission System or one of its affiliates, or an unaffiliated entity that submits a Surplus Interconnection Request to utilize Surplus Interconnection Service within the Transmission System in the PJM Region. A Surplus Interconnection Customer is not a New Service Customer.

Surplus Interconnection Request:

"Surplus Interconnection Request" shall mean a request submitted by a Surplus Interconnection Customer, pursuant to Tariff, Attachment RR, to utilize Surplus Interconnection Service within the Transmission System in the PJM Region. A Surplus Interconnection Request is not a New Service Request.

Surplus Interconnection Service:

"Surplus Interconnection Service" shall mean any unneeded portion of Interconnection Service established in an Interconnection Service Agreement, such that if Surplus Interconnection Service is utilized, the total amount of Interconnection Service at the Point of Interconnection would remain the same.

Switching and Tagging Rules:

"Switching and Tagging Rules" shall mean the switching and tagging procedures of Interconnected Transmission Owners and Interconnection Customer as they may be amended from time to time.

System Impact Study:

"System Impact Study" shall mean an assessment by the Transmission Provider of (i) the adequacy of the Transmission System to accommodate a Completed Application, an Interconnection Request or an Upgrade Request, (ii) whether any additional costs may be incurred in order to provide such transmission service or to accommodate an Interconnection Request, and (iii) with respect to an Interconnection Request, an estimated date that an Interconnection Customer's Customer Facility can be interconnected with the Transmission System and an estimate of the Interconnection Customer's cost responsibility for the interconnection; and (iv) with respect to an Upgrade Request, the estimated cost of the requested system upgrades or expansion, or of the cost of the system upgrades or expansion, necessary to provide the requested incremental rights.

System Protection Facilities:

"System Protection Facilities" shall refer to the equipment required to protect (i) the Transmission System, other delivery systems and/or other generating systems connected to the Transmission System from faults or other electrical disturbance occurring at or on the Customer Facility, and (ii) the Customer Facility from faults or other electrical system disturbance occurring on the Transmission System or on other delivery systems and/or other generating systems to which the Transmission System is directly or indirectly connected. System Protection Facilities shall include such protective and regulating devices as are identified in the Applicable Technical Requirements and Standards or that are required by Applicable Laws and Regulations or other Applicable Standards, or as are otherwise necessary to protect personnel and equipment and to minimize deleterious effects to the Transmission System arising from the Customer Facility.

Transmission Facilities:

"Transmission Facilities" shall have the meaning set forth in the Operating Agreement.

Transmission Injection Rights:

"Transmission Injection Rights" shall mean Capacity Transmission Injection Rights and Energy Transmission Injection Rights.

Transmission Interconnection Customer:

"Transmission Interconnection Customer" shall mean an entity that submits an Interconnection Request to interconnect or add Merchant Transmission Facilities to the Transmission System or to increase the capacity of Merchant Transmission Facilities interconnected with the Transmission System in the PJM Region or an entity that submits an Upgrade Request for Merchant Network Upgrades (including accelerating the construction of any transmission enhancement or expansion, other than Merchant Transmission Facilities, that is included in the Regional Transmission Expansion Plan prepared pursuant to Operating Agreement, Schedule 6).

Transmission Owner:

"Transmission Owner" shall mean a Member that owns or leases with rights equivalent to ownership Transmission Facilities and is a signatory to the PJM Transmission Owners Agreement. Taking transmission service shall not be sufficient to qualify a Member as a Transmission Owner.

Transmission Owner Attachment Facilities:

"Transmission Owner Attachment Facilities" shall mean that portion of the Transmission Owner Interconnection Facilities comprised of all Attachment Facilities on the Interconnected Transmission Owner's side of the Point of Interconnection.

Transmission Owner Interconnection Facilities:

"Transmission Owner Interconnection Facilities" shall mean all Interconnection Facilities that are not Customer Interconnection Facilities and that, after the transfer under Tariff, Attachment P, Appendix 2, section 5.5 to the Interconnected Transmission Owner of title to any Transmission Owner Interconnection Facilities that the Interconnection Customer constructed, are owned, controlled, operated and maintained by the Interconnected Transmission Owner on the Interconnected Transmission Owner's side of the Point of Interconnection identified in appendices to the Interconnection Service Agreement and to the Interconnection Construction Service Agreement, including any modifications, additions or upgrades made to such facilities and equipment, that are necessary to physically and electrically interconnect the Customer Facility with the Transmission System or interconnected distribution facilities.

Transmission Provider:

The "Transmission Provider" shall be the Office of the Interconnection for all purposes, provided that the Transmission Owners will have the responsibility for the following specified activities:

(a) The Office of the Interconnection shall direct the operation and coordinate the maintenance of the Transmission System, except that the Transmission Owners will continue to direct the operation and maintenance of those transmission facilities that are not listed in the PJM Designated Facilities List contained in the PJM Manual on Transmission Operations;

(b) Each Transmission Owner shall physically operate and maintain all of the facilities that it owns; and

(c) When studies conducted by the Office of the Interconnection indicate that enhancements or modifications to the Transmission System are necessary, the Transmission Owners shall have the responsibility, in accordance with the applicable terms of the Tariff, Operating Agreement and/or the Consolidated Transmission Owners Agreement to construct, own, and finance the needed facilities or enhancements or modifications to facilities.

Transmission Service:

"Transmission Service" shall mean Point-To-Point Transmission Service provided under Tariff, Part II on a firm and non-firm basis.

Transmission System:

"Transmission System" shall mean the facilities controlled or operated by the Transmission Provider within the PJM Region that are used to provide transmission service under Tariff, Part II and Part III.

Transmission Withdrawal Rights:

"Transmission Withdrawal Rights" shall mean Firm Transmission Withdrawal Rights and Non-Firm Transmission Withdrawal Rights.

APPENDIX 2

STANDARD TERMS AND CONDITIONS FOR INTERCONNECTIONS

1 Commencement, Term of and Conditions Precedent to Interconnection Service

1.1 Commencement Date:

The effective date of an Interconnection Service Agreement shall be the date provided in Section 4.0 of the Interconnection Service Agreement. Interconnection Service under this Interconnection Service Agreement shall commence upon the satisfaction of the conditions precedent set forth in Section 1.2 below.

1.2 Conditions Precedent:

The following conditions must be satisfied prior to the commencement of Interconnection Service under this Interconnection Service Agreement:

(a) This Interconnection Service Agreement, if filed with FERC, shall have been accepted for filing by the FERC;

(b) All requirements for Initial Operation as specified in Section 1.4 below shall have been met and Initial Operation of the Customer Facility shall have been completed.

(c) Interconnection Customer shall be in compliance with all Applicable Technical Requirements and Standards for interconnection under the Tariff (as determined by the Transmission Provider).

1.3 Term:

This Interconnection Service Agreement shall remain in full force and effect until it is terminated in accordance with Section 16 of this Appendix 2.

1.4 Initial Operation:

The following requirements shall be satisfied prior to Initial Operation of the Customer Facility:

1.4.1 The construction of all Interconnection Facilities necessary for the interconnection of the Customer Facility has been completed;

1.4.2 The Interconnected Transmission Owner has accepted any Interconnection Facilities constructed by Interconnection Customer pursuant to the Interconnection Construction Service Agreement;

1.4.3 The Interconnection Customer and the Interconnected Transmission Owner have all necessary systems and personnel in place to allow for parallel operation of their respective facilities;

1.4.4 The Interconnected Transmission Owner has received all applicable documentation for the Interconnection Facilities built by the Interconnection Customer, certified as correct, including,

but not limited to, access to the field copy of marked-up drawings reflecting the as-built condition, pre-operation test reports, and instruction books; and

1.4.5 Interconnection Customer shall have received any necessary authorization from Transmission Provider to synchronize with the Transmission System or to energize, as applicable per the determination of Transmission Provider, the Customer Facility and Interconnection Facilities.

1.4A Other Interconnection Options

1.4A.1 Limited Operation:

If any of the Transmission Owner Interconnection Facilities are not reasonably expected to be completed prior to the Interconnection Customer's planned date of Initial Operation, and provided that the Interconnected Transmission Owner has accepted the Customer Interconnection Facilities pursuant to the Interconnection Construction Service Agreement, Transmission Provider shall, upon the request and at the expense of Interconnection Customer, perform appropriate power flow or other operating studies on a timely basis to determine the extent to which the Customer Facility and the Customer Interconnection Facilities may operate prior to the completion of the Transmission Owner Interconnection Facilities consistent with Applicable Laws and Regulations, Applicable Reliability Standards, Good Utility Practice, and the Interconnection Service Agreement. In accordance with the results of such studies and subject to such conditions as Transmission Provider determines to be reasonable and appropriate, Transmission Provider shall (a) permit Interconnection Customer to operate the Customer Facility and the Customer Interconnection Facilities, and (b) grant Interconnection Customer limited, interim Interconnection Rights commensurate with the extent to which operation of the Customer Facility is permitted.

1.4A.2 Provisional Interconnection Service:

Upon the request of Interconnection Customer, and prior to completion of requisite Interconnection Facilities, Network Upgrades, Local Upgrades, or system protection facilities Interconnection Customer may request limited Interconnection Service at the discretion of Transmission Provider based upon an evaluation that will consider the results of available studies, which terms shall be memorialized in the Interconnection Service Agreement. Consistent with Tariff, Part VI, Subpart B, section 212.4, Interconnection Customer may execute the Interconnection Service Agreement, request dispute resolution or request that the Interconnection Service Agreement be filed unexecuted with the Commission. Transmission Provider shall determine, through available studies or additional studies as necessary, whether stability, short circuit, thermal, and/or voltage issues would arise if Interconnection Customer interconnects without modifications to the Generating Facility or the Transmission System. Transmission Provider shall determine whether any Interconnection Facilities, Network Upgrades, Local Upgrades, or system protection facilities that are necessary to meet the requirements of NERC, or any applicable Regional Entity for the interconnection of a new, modified and/or expanded Generating Facility are in place prior to the commencement of Interconnection Service from the Generating Facility. Where available studies indicate that such Interconnection Facilities, Network Upgrades, Local Upgrades, and/or system protection facilities that are required for the

interconnection of a new, modified and/or expanded Generating Facility are not currently in place, Transmission Provider will perform a study, at the Interconnection Customer's expense, to confirm the facilities that are required for Provisional Interconnection Service. The maximum permissible output of the Generating Facility shall be studied and updated annually and at the Interconnection Customer's expense. The results will be communicated to the Interconnection Customer in writing upon completion of the study. Interconnection Customer assumes all risk and liabilities with respect to the Provisional Interconnection Service, including changes in output limits and Interconnection Facilities, Network Upgrades, Local Upgrades, and/or system protection facilities cost responsibilities.

1.5 Survival:

The Interconnection Service Agreement shall continue in effect after termination to the extent necessary to provide for final billings and payments; to permit the determination and enforcement of liability and indemnification obligations arising from acts or events that occurred while the Interconnection Service Agreement was in effect; and to permit each Interconnection Party to have access to the real property, including but not limited to leased property and easements of the other Interconnection Parties pursuant to Section 16 of this Appendix 2 to disconnect, remove or salvage its own facilities and equipment.

2 Interconnection Service

2.1 Scope of Service:

Interconnection Service shall be provided to the Interconnection Customer at the Point of Interconnection (a), in the case of interconnection of the Customer Facility of a Generation Interconnection Customer, up to the Maximum Facility Output, and (b), in the case of interconnection of the Customer Facility of a Transmission Interconnection Customer, up to the Nominal Rated Capability. The location of the Point of Interconnection shall be mutually agreed by the Interconnected Entities, provided, however, that if the Interconnected Entities are unable to agree on the Point of Interconnection, the Transmission Provider shall determine the Point of Interconnection, provided that Transmission Provider shall not select a Point of Interconnection that would impose excessive costs on either of the Interconnected Entities and shall take material system reliability considerations into account in such selection. Specifications for the Customer Facility and the location of the Point of Interconnection shall be set forth in an appendix to the Interconnection Service Agreement and shall conform to those stated in the Facilities Study.

2.2 Non-Standard Terms:

The standard terms and conditions of this Appendix 2 shall not apply, to such extent as Transmission Provider determines to be reasonably necessary to accommodate such circumstances, in the event that the Interconnection Customer acquires an ownership interest in facilities which, under the standard terms and conditions of the Interconnection Construction Service Agreement would be part of the Transmission Owner Interconnection Facilities. In such circumstances and to the extent determined by Transmission Provider to be reasonably necessary, non-standard terms and conditions mutually agreed upon by all Interconnection Parties shall apply,

subject to FERC and any other necessary regulatory acceptance or approval. In addition, a Generation Interconnection Customer that acquires an ownership interest in such facilities shall become, and shall remain for so long as it retains such interest, a signatory to the Consolidated Transmission Owners Agreement.

2.3 No Transmission Services:

The execution of an Interconnection Service Agreement does not constitute a request for transmission service, or entitle Interconnection Customer to receive transmission service, under Part II or Part III of the Tariff. Nor does the execution of an Interconnection Service Agreement obligate the Interconnected Transmission Owner or Transmission Provider to procure, supply or deliver to Interconnection Customer or the Customer Facility any energy, capacity, Ancillary Services or Station Power (and any associated distribution services).

2.4 Use of Distribution Facilities:

To the extent that a Generation Interconnection Customer uses distribution facilities for the purpose of delivering energy to the Transmission System, Interconnection Service under this Tariff shall include the construction and/or use of such distribution facilities. In such cases, to such extent as Transmission Provider determines to be reasonably necessary to accommodate such circumstances, the Interconnection Service Agreement may include non-standard terms and conditions mutually agreed upon by all Interconnection Parties as needed to conform with Applicable Laws and Regulations and Applicable Standards relating to such distribution facilities.

2.5 Election by Behind The Meter Generation:

In the event that a Generation Interconnection Customer's Customer Facility is Behind The Meter Generation, the Generation Interconnection Customer may elect from time to time, subject to the terms of this section, whether to operate all or a portion of its Customer Facility's generating capacity as a Capacity Resource under the Tariff and the Operating Agreement.

2.5.1 Capacity Resource Election:

The Generation Interconnection Customer may elect to operate all or a portion of its Customer Facility as a Capacity Resource only to the extent that the Interconnection Service Agreement grants Capacity Interconnection Rights. Such an election may include all or any portion of the Customer Facility's capacity for which Capacity Interconnection Rights have been granted.

2.5.2 Timing and Duration of Election:

The Generation Interconnection Customer shall make an initial election under this section no later than 30 days prior to the commencement of Interconnection Service. Thereafter, the Generation Interconnection Customer may make the election authorized by this Section 2.5 only once in each calendar year and must notify Transmission Provider of such an election no later than May 1, and no sooner than March 15, of each year. Each such election shall be effective commencing on June 1 following Transmission Provider's receipt of notice of the election. An election under this

Section 2.5 shall remain in effect unless and until the Generation Interconnection Customer modifies or terminates it in a subsequent election made in accordance with the terms of this section.

3 Modification Of Facilities

3.1 General:

Subject to Applicable Laws and Regulations and to any applicable requirements or conditions of the Tariff and the Operating Agreement, either Interconnected Entity may undertake modifications to its facilities. In the event that an Interconnected Entity plans to undertake a modification that reasonably may be expected upon completion to have a permanent material impact on the other Interconnected Entity's facilities, that Interconnected Entity, in accordance with Good Utility Practice, shall provide the other Interconnection Parties with sufficient information regarding such modification, so that the other Interconnection Parties may evaluate the potential impact of such modification prior to commencement of the work. The Interconnected Entity desiring to perform such modification shall provide the relevant drawings, plans, and specifications to the other Interconnection Parties at least ninety days, or such shorter period to which the Interconnection Parties receiving the information may agree (which agreement shall not unreasonably be withheld, conditioned, or delayed), in advance of the beginning of the work. The Interconnection Customer shall notify Transmission Provider and Interconnected Transmission Owner of the proposed modifications and Transmission Provider shall provide, within sixty days of receipt of the relevant drawings and specifications (or within such other time upon which the Interconnection Parties may agree), an estimate of any modifications to the Transmission System that would be necessary to accommodate the proposed modifications by Interconnection Customer and a good faith estimate of the costs thereof.

3.2 Interconnection Request:

This Section 3 shall not apply to any proposed modifications by Interconnection Customer to its facilities for which Interconnection Customer must make an Interconnection Request under the Tariff. In such circumstances, the Interconnection Customer and Transmission Provider shall follow the requirements of Subpart A of Part IV of the Tariff.

3.3 Standards:

Any additions, modifications, or replacements made to an Interconnected Entity's facilities shall be constructed and operated in accordance with Good Utility Practice, Applicable Standards and Applicable Laws and Regulations.

3.4 Modification Costs:

Unless otherwise required by Applicable Laws and Regulations or this Appendix 2 and, with respect to a Transmission Interconnection Customer, subject to the terms of Section 236.2 of the Tariff:

(a) Interconnection Customer shall not be responsible for the costs of any additions, modifications, or replacements that the Interconnected Transmission Owner in its discretion or at the direction of Transmission Provider makes to the Interconnection Facilities or the Transmission System in order to facilitate the interconnection of a third party to the Interconnection Facilities or the Transmission System, or to provide transmission service under the Tariff to a third party.

(b) Interconnection Customer shall be responsible for the costs of any additions, modifications, or replacements to the Interconnection Facilities or the Transmission System that are required, in accord with Good Utility Practice and/or to maintain compliance with Applicable Laws and Regulations or Applicable Standards, in order to accommodate additions, modifications, or replacements made by Interconnection Customer to the Customer Facility or to the Customer Interconnection Facilities.

(c) Interconnection Customer shall be responsible for the costs of any additions, modifications, or replacements to the Customer Interconnection Facilities or the Customer Facility that are required, in accord with Good Utility Practice and/or to maintain compliance with Applicable Laws and Regulations or Applicable Standards, in order to accommodate additions, modifications, or replacements that Transmission Provider or the Interconnected Transmission Owner makes to the Transmission System or to the Transmission Owner Interconnection Facilities, but only to the extent that Transmission Provider's or the Interconnected Transmission Owner's changes to the Transmission System or the Transmission Owner Interconnection Facilities are made pursuant to Good Utility Practice and/or to maintain compliance with Applicable Laws and Regulations or Applicable Standards.

4 Operations

4.1 General:

Each Interconnected Entity shall operate, or shall cause operation of, its facilities in a safe and reliable manner in accord with (i) the terms of this Appendix 2; (ii) Applicable Standards; (iii) applicable rules, procedures and protocols set forth in the Tariff and the Operating Agreement, as any or all may be amended from time to time; (iv) Applicable Laws and Regulations, and (v) Good Utility Practice.

4.1.1 Interconnection Customer Drawings:

Within one hundred twenty (120) days after the date of Initial Operation, unless the Interconnection Parties agree on another mutually acceptable deadline, the Interconnection Customer shall deliver to the Transmission Provider and the Interconnected Transmission Owner final, "as-built" drawings, information and documents regarding the Customer Interconnection Facilities, including, as and to the extent applicable: a one-line diagram, a site plan showing the Customer Facility and the Customer Interconnection Facilities, plan and elevation drawings showing the layout of the Customer Interconnection Facilities, a relay functional diagram, relaying AC and DC schematic wiring diagrams and relay settings for all facilities associated with the Interconnection Customer's step-up transformers, the facilities connecting the Customer Facility to the step-up transformers and the Customer Interconnection Facilities, and the impedances

(determined by factory tests) for the associated step-up transformers and the Customer Facility. As applicable, the Interconnection Customer shall provide Transmission Provider and the Interconnected Transmission Owner specifications for the excitation system, automatic voltage regulator, Customer Facility control and protection settings, transformer tap settings, and communications.

4.2 [Reserved.]

4.3 Interconnection Customer Obligations:

Interconnection Customer shall obtain Transmission Provider's approval prior to either synchronizing with the Transmission System or energizing, as applicable per the determination of Transmission Provider, the Customer Facility or, except in an Emergency Condition, disconnecting the Customer Facility from the Transmission System, and shall coordinate such synchronizations, energizations, and disconnections with the Interconnected Transmission Owner.

4.4 Transmission Interconnection Customer Obligations:

A Transmission Interconnection Customer that will be a Merchant Transmission Provider is subject to the terms and conditions in Tariff, Section 38.

4.5 Permits and Rights-of-Way:

Each Interconnected Entity at its own expense shall maintain in full force and effect all permits, licenses, rights-of-way and other authorizations as may be required to maintain the Customer Facility and the Interconnection Facilities that the entity owns, operates and maintains and, upon reasonable request of the other Interconnected Entity, shall provide copies of such permits, licenses, rights-of-way and other authorizations at its own expense to the requesting party.

4.6 No Ancillary Services:

Except as provided in Section 4.7 of this Appendix 2, nothing in this Appendix 2 is intended to obligate the Interconnection Customer to supply Ancillary Services to either Transmission Provider or the Interconnected Transmission Owner.

4.7 Reactive Power and Primary Frequency Response

4.7.1 Reactive Power

4.7.1.1 Reactive Power Design Criteria

4.7.1.1.1 New Facilities:

For all new Generating Facilities to be interconnected pursuant to the Tariff, other than wind-powered and other non-synchronous generation facilities, the Generation Interconnection Customer shall design its Customer Facility to maintain a composite power delivery at continuous

rated power output at a power factor of at least 0.95 leading to 0.90 lagging. For all new wind-powered and other non-synchronous generation facilities the Generation Interconnection Customer shall design its Customer Facility with the ability to maintain a composite power delivery at a power factor of at least 0.95 leading to 0.95 lagging across the full range of continuous rated power output. For all wind-powered and other non-synchronous generation facilities entering the New Service Queue on or after November 1, 2016, the power factor requirement shall be measured at the high-side of the facility substation transformers. This power factor range standard shall be dynamic and can be met using, for example, power electronics designed to supply this level of reactive capability (taking into account any limitations due to voltage level, real power output, etc.) or fixed and switched capacitors, or a combination of the two. For all wind-powered and other non-synchronous generation facilities entering the New Service Queue on or after May 1, 2015, and before November 1, 2016, the power factor requirement shall be measured at the generator's terminals. For new generation resources of more than 20 MW, other than wind-powered and other non-synchronous Generating Facilities, the power factor requirement shall be measured at the generator's terminals. For new generation resources of 20 MW or less, and all wind-powered and other non-synchronous generation facilities entering the New Service Queue prior to May 1, 2015, the power factor requirement shall be measured at the Point of Interconnection. Any different reactive power design criteria that Transmission Provider determines to be appropriate for a wind-powered or other non-synchronous generation facility shall be stated in the Interconnection Service Agreement. A Transmission Interconnection Customer interconnecting Merchant D.C. Transmission Facilities and/ or Controllable A.C. Merchant Transmission Facilities shall design its Customer Facility to maintain a power factor at the Point of Interconnection of at least 0.95 leading and 0.95 lagging, when the Customer Facility is operating at any level within its approved operating range.

4.7.1.1.2 Increases in Generating Capacity or Energy Output:

All increases in the capacity or energy output of any generation facility interconnected with the Transmission System, other than wind-powered and other non-synchronous Generating Facilities, shall be designed with the ability to maintain a composite power delivery at continuous rated power output at a power factor for all incremental MW of capacity or energy output, of at least 1.0 (unity) to 0.90 lagging. Wind-powered generation facilities and other non-synchronous generation facilities entering the New Service Queue on or after November 1, 2016, shall be designed with the ability to maintain a composite power delivery at a power factor for all incremental MW of capacity or energy output of at least 0.95 leading to 0.95 lagging measured at the high-side of the facility substation transformers across the full range of continuous rated power output. This power factor range standard shall be dynamic and can be met using, for example, power electronics designed to supply this level of reactive capability (taking into account any limitations due to voltage level, real power output, etc.) or fixed and switched capacitors, or a combination of the two. Wind-powered generation facilities and other non-synchronous generation facilities entering the New Service Queue on or after May 1, 2015, and before November 1, 2016, shall be designed with the ability to maintain a composite power delivery at a power factor for all incremental MW of capacity or energy output, of at least 0.95 leading to 0.95 lagging measured at the generator's terminals under conditions in which a wind-powered generation facility's real power output exceeds 25 percent of its continuous rated power output and, for all other non-synchronous generation facilities, across the full range of continuous rated power output. Wind-powered

generation facilities and other non-synchronous generation facilities entering the New Service Queue prior to May 1, 2015 shall be designed with the ability to maintain a composite power delivery at continuous rated power output at a power factor for all incremental MW of capacity of energy output of at least 1.0 (unity) to 0.95 lagging measured at the generator's terminals. The power factor requirement associated with increases in capacity or energy output of more than 20 MW to synchronous generation facilities interconnected with the Transmission System shall be measured at the generator's terminals. The power factor requirement associated with increases in capacity or energy output of 20 MW or less to synchronous generation facilities interconnected to the Transmission System shall be measured at the Point of Interconnection.

4.7.1.2 Obligation to Supply Reactive Power:

Interconnection Customer agrees, as and when so directed by Transmission Provider or when so directed by the Interconnected Transmission Owner acting on behalf or at the direction of Transmission Provider, to operate the Customer Facility to produce reactive power within the design limitations of the Customer Facility pursuant to voltage schedules, reactive power schedules or power factor schedules established by Transmission Provider or, as appropriate, the Interconnected Transmission Owner. Transmission Provider shall maintain oversight over such schedules to ensure that all sources of reactive power in the PJM Region, as applicable, are treated in an equitable and not unduly discriminatory manner. Interconnection Customer agrees that Transmission Provider and the Interconnected Transmission Owner, acting on behalf or at the direction of Transmission Provider, may make changes to the schedules that they respectively establish as necessary to maintain the reliability of the Transmission System.

4.7.1.3 Deviations from Schedules:

In the event that operation of the Customer Facility of an Interconnection Customer causes the Transmission System or the Interconnected Transmission Owner's facilities to deviate from appropriate voltage schedules and/or reactive power schedules as specified by Transmission Provider or the Interconnected Transmission Owner's operations control center (acting on behalf or at the direction of Transmission Provider), or that otherwise is inconsistent with Good Utility Practice and results in an unreasonable deterioration of the quality of electric service to other customers of Transmission Provider or the Interconnected Transmission Owner, the Interconnection Customer shall, upon discovery of the problem or upon notice from Transmission Provider or the Interconnected Transmission Owner, acting on behalf or at the direction of Transmission Provider, take whatever steps are reasonably necessary to alleviate the situation at its expense, in accord with Good Utility Practice and within the reactive capability of the Customer Facility. In the event that the Interconnection Customer does not alleviate the situation within a reasonable period of time following Transmission Provider's or the Interconnected Transmission Owner's notice thereof, the Interconnected Transmission Owner, with Transmission Provider's approval, upon notice to the Interconnection Customer and at the Interconnection Customer's expense, may take appropriate action, including installation on the Transmission System of power factor correction or other equipment, as is reasonably required, consistent with Good Utility Practice, to remedy the situation cited in Transmission Provider's or the Interconnected Transmission Owner's notice to the Interconnection Customer under this section.

4.7.1.4 Payment for Reactive Power:

Any payments to the Interconnection Customer for reactive power shall be in accordance with Schedule 2 of the Tariff.

4.7.2 Primary Frequency Response:

Section 4.7.2 of this ISA and its subsections apply to New Service Requests received on or after October 1, 2018.

Generation Interconnection Customer shall ensure the primary frequency response capability of its Customer Facility by installing, maintaining, and operating a functioning governor or equivalent controls. The term "functioning governor or equivalent controls" as used herein shall mean the required hardware and/or software that provides frequency responsive real power control with the ability to sense changes in system frequency and autonomously adjust the Customer Facility's real power output in accordance with the droop and deadband parameters and in the direction needed to correct frequency deviations. Generation Interconnection Customer is required to install a governor or equivalent controls with the capability of operating: (1) with a maximum 5 percent droop and ±0.036 Hz deadband; or (2) in accordance with the relevant droop, deadband, and timely and sustained response settings from an approved NERC Reliability Standard providing for equivalent or more stringent parameters. The droop characteristic shall be: (1) based on the nameplate capacity of the Customer Facility, and shall be linear in the range of frequencies between 59 to 61 Hz that are outside of the deadband parameter; or (2) based an approved NERC Reliability Standard providing for an equivalent or more stringent parameter. The deadband parameter shall be: the range of frequencies above and below nominal (60 Hz) in which the governor or equivalent controls is not expected to adjust the Customer Facility's real power output in response to frequency deviations. The deadband shall be implemented: (1) without a step to the droop curve, that is, once the frequency deviation exceeds the deadband parameter, the expected change in the Customer Facility's real power output in response to frequency deviations shall start from zero and then increase (for under-frequency deviations) or decrease (for over-frequency deviations) linearly in proportion to the magnitude of the frequency deviation; or (2) in accordance with an approved NERC Reliability Standard providing for an equivalent or more stringent parameter. Generation Interconnection Customer shall notify Transmission Provider that the primary frequency response capability of the Customer Facility has been tested and confirmed during commissioning. Once Generation Interconnection Customer has synchronized the Customer Facility with the Transmission System, Generation Interconnection Customer shall operate the Customer Facility consistent with the provisions specified in sections 4.7.2.1 and 4.7.2.2 of this agreement. The primary frequency response requirements contained herein shall apply to both synchronous and non-synchronous Customer Facilities.

4.7.2.1 Governor or Equivalent Controls:

Whenever the Customer Facility is operated in parallel with the Transmission System, Generation Interconnection Customer shall operate the Customer Facility with its governor or equivalent controls in service and responsive to frequency. Generation Interconnection Customer shall: (1) in coordination with Transmission Provider and/or the relevant balancing authority, set the deadband parameter to: (1) a maximum of ±0.036 Hz and set the droop parameter to a maximum of 5 percent; or (2) implement the relevant droop and deadband settings from an approved NERC

Reliability Standard that provides for equivalent or more stringent parameters. Generation Interconnection Customer shall be required to provide the status and settings of the governor or equivalent controls to Transmission Provider and/or the relevant balancing authority upon request. If Generation Interconnection Customer needs to operate the Customer Facility with its governor or equivalent controls not in service, Generation Interconnection Customer shall immediately notify Transmission Provider and the relevant balancing authority, and provide both with the following information: (1) the operating status of the governor or equivalent controls (i.e., whether it is currently out of service or when it will be taken out of service); (2) the reasons for removing the governor or equivalent controls from service; and (3) a reasonable estimate of when the governor or equivalent controls will be returned to service. Generation Interconnection Customer shall make Reasonable Efforts to return its governor or equivalent controls into service as soon as practicable. Generation Interconnection Customer shall make Reasonable Efforts to keep outages of the Customer Facility's governor or equivalent controls to a minimum whenever the Customer Facility is operated in parallel with the Transmission System.

4.7.2.2 Timely and Sustained Response:

Generation Interconnection Customer shall ensure that the Customer Facility's real power response to sustained frequency deviations outside of the deadband setting is automatically provided and shall begin immediately after frequency deviates outside of the deadband, and to the extent the Customer Facility has operating capability in the direction needed to correct the frequency deviation. Generation Interconnection Customer shall not block or otherwise inhibit the ability of the governor or equivalent controls to respond and shall ensure that the response is not inhibited, except under certain operational constraints including, but not limited to, ambient temperature limitations, physical energy limitations, outages of mechanical equipment, or regulatory requirements. The Customer Facility shall sustain the real power response at least until system frequency returns to a value within the deadband setting of the governor or equivalent controls. A Commission-approved Reliability Standard with equivalent or more stringent requirements shall supersede the above requirements.

4.7.2.3 Exemptions:

Customer Facilities that are regulated by the United States Nuclear Regulatory Commission shall be exempt from sections 4.7.2, 4.7.2.1, and 4.7.2.2 of this agreement. Customer Facilities that are behind the meter generation that is sized-to-load (i.e., the thermal load and the generation are near-balanced in real-time operation and the generation is primarily controlled to maintain the unique thermal, chemical, or mechanical output necessary for the operating requirements of its host facility) shall be required to install primary frequency response capability in accordance with the droop and deadband capability requirements specified in section 4.7.2, but shall be otherwise exempt from the operating requirements in sections 4.7.2, 4.7.2.1, 4.7.2.2, and 4.7.2.4 of this agreement.

4.7.2.4 Energy Storage Resources:

Generation Interconnection Customer interconnecting an Energy Storage Resource shall establish an operating range in Schedule I of this ISA that specifies a minimum state of charge and a

maximum state of charge between which the Energy Storage Resource will be required to provide primary frequency response consistent with the conditions set forth in sections 4.7.2, 4.7.2.1, 4.7.2.2, and 4.7.2.3 of this agreement. Schedule I shall specify whether the operating range is static or dynamic, and shall consider (1) the expected magnitude of frequency deviations in the interconnection; (2) the expected duration that system frequency will remain outside of the deadband parameter in the interconnection; (3) the expected incidence of frequency deviations outside of the deadband parameter in the interconnection; (4) the physical capabilities of the Energy Storage Resource; (5) operational limitations of the Energy Storage Resource due to manufacturer specifications; and (6) any other relevant factors agreed to by Transmission Provider and Generation Interconnection Customer, and in consultation with the relevant transmission owner or balancing authority as appropriate. If the operating range is dynamic, then Schedule I must establish how frequently the operating range will be reevaluated and the factors that may be considered during its reevaluation.

Generation Interconnection Customer's Energy Storage Resource is required to provide timely and sustained primary frequency response consistent with section 4.7.2.2 of this agreement when it is online and dispatched to inject electricity to the Transmission System and/or receive electricity from the Transmission System. This excludes circumstances when the Energy Storage Resource is not dispatched to inject electricity to the Transmission System and/or dispatched to receive electricity from the Transmission System. If Generation Interconnection Customer's Energy Storage Resource is charging at the time of a frequency deviation outside of its deadband parameter, it is to increase (for over-frequency deviations) or decrease (for under-frequency deviations) the rate at which it is charging in accordance with its droop parameter. Generation Interconnection Customer's Energy Storage Resource is not required to change from charging to discharging, or vice versa, unless the response necessitated by the droop and deadband settings requires it to do so and it is technically capable of making such a transition.

4.8 Under- and Over-Frequency and Under- and Over- Voltage Conditions:

The Generation Interconnection Customer shall ensure "frequency ride through" capability and "voltage ride through" capability of its Customer Facility. The Generation Interconnection Customer shall enable these capabilities such that its Customer Facility shall not disconnect automatically or instantaneously from the system or equipment of the Transmission Provider and any Affected Systems for a defined under-frequency or over-frequency condition, or an under-voltage or over-voltage condition, as tested pursuant to Section 1.4.4 of Appendix 2 of this Interconnection Service Agreement. The defined conditions shall be in accordance with Good Utility Practice and consistent with any standards and guidelines that are applied to other Generating Facilities in the PJM Region on a comparable basis. The Customer Facility's protective equipment settings shall comply with the Transmission Provider's automatic load-shed program. The Transmission Provider shall review the protective equipment settings to confirm compliance with the automatic load-shed program. The term "ride through" as used herein shall mean the ability of a Customer Facility to stay connected to and synchronized with the system or equipment of the Transmission Provider and any Affected Systems during system disturbances within a range of conditions, in accordance with Good Utility Practice and consistent with any standards and guidelines that are applied to other Generating Facilities in the Balancing Authority on a comparable basis. The term "frequency ride through" as used herein shall mean the ability of

a Generation Interconnection Customer's Customer Facility Customer Facility to stay connected to and synchronized with the Transmission System or equipment of the Transmission Provider and any Affected Systems during system disturbances within a range of under-frequency and over-frequency conditions, in accordance with Good Utility Practice and consistent with any standards and guidelines that are applied to other Generating Facilities in the PJM Region on a comparable basis. The term "voltage ride through" as used herein shall mean the ability of a Customer Facility to stay connected to and synchronized with the system or equipment of the Transmission Provider and any Affected Systems during system disturbances within a range of under-voltage and over-voltage conditions, in accordance with Good Utility Practice and consistent with any standards and guidelines that are applied to other Generating Facilities in the PJM Region on a comparable basis.

The Transmission System is designed to automatically activate a load-shed program as required by NERC and each Applicable Regional Entity in the event of an under-frequency system disturbance. A Generation Interconnection Customer shall implement under-frequency and over-frequency relay set points for the Customer Facility as required by NERC and each Applicable Regional Entity to ensure "frequency ride through" capability of the Transmission System. The response of a Generation Interconnection Customer's Customer Facility to frequency deviations of predetermined magnitudes, both under-frequency and over-frequency deviations shall be studied and coordinated with the Transmission Provider in accordance with Good Utility Practice.

4.9 System Protection and Power Quality

4.9.1 System Protection:

Interconnection Customer shall, at its expense, install, operate and maintain such System Protection Facilities as may be required in connection with operation of the Customer Facility and the Customer Interconnection Facilities consistent with Applicable Technical Requirements and Standards. Interconnected Transmission Owner shall install any System Protection Facilities that may be required, as determined by Transmission Provider, on the Transmission Owner Interconnection Facilities or the Transmission System in connection with the operation of the Customer Facility and the Customer Interconnection Facilities. Responsibility for the cost of any System Protection Facilities required on the Transmission Owner Interconnection Facilities or the Transmission System shall be allocated as provided in Section 217 of the Tariff.

4.9.2 Power Quality:

The Customer Facility and Customer Interconnection Facilities shall not cause excessive deviations from the power quality criteria set forth in the Applicable Technical Requirements and Standards.

4.10 Access Rights:

Each Interconnected Entity shall provide the other Interconnected Entity access to areas under its control as reasonably necessary to permit the other Interconnected Entity to perform its obligations under this Appendix 2, including operation and maintenance obligations. An Interconnected

Entity that obtains such access shall comply with all safety rules applicable to the area to which access is obtained. Each Interconnected Entity agrees to inform the other Interconnected Entity's representatives of safety rules applicable to an area.

4.11 Switching and Tagging Rules:

The Interconnected Entities shall comply with applicable Switching and Tagging Rules in obtaining clearances for work or for switching operations on equipment. Such Switching and Tagging Rules shall be developed in accordance with OSHA standards codified at 29 C.F.R. Part 1910, or successor standards. Each Interconnected Entity shall provide the other Interconnected Entity a copy of its Switching and Tagging Rules that are applicable to the other Interconnected Entity's activities.

4.12 Communications and Data Protocol:

The Interconnected Entities shall comply with any communications and data protocol that the Transmission Provider may establish.

4.13 Nuclear Generating Facilities:

In the event that the Customer Facility is a nuclear Generating Facility, the Interconnection Parties shall agree to such non-standard terms and conditions as are reasonably necessary to accommodate the Interconnection Customer's satisfaction of Nuclear Regulatory Commission requirements relating to the safety and reliability of operations of such facilities.

5 Maintenance

5.1 General:

Each Interconnected Entity shall maintain, or shall cause the maintenance of, its facilities in a safe and reliable manner in accord with (i) the terms of this Appendix 2; (ii) Applicable Standards; (iii) applicable rules, procedures and protocols set forth in the Tariff and the Operating Agreement, as any or all may be amended from time to time; (iv) Applicable Laws and Regulations, and (v) Good Utility Practice.

5.2 [Reserved.]

5.3 Outage Authority and Coordination

5.3.1 Coordination:

The Interconnection Parties agree to confer regularly to coordinate the planning, scheduling and performance of preventive and corrective maintenance on the Customer Facility, the Customer Interconnection Facilities and any Attachment Facilities owned by the Interconnected Transmission Owner.

5.3.2 Authority:

Each Interconnected Entity may, in accordance with Good Utility Practice, remove from service its facilities that may affect the other Interconnected Entity's facilities in order to perform maintenance or testing or to install or replace equipment. Except in the event of an Emergency Condition, the Interconnection Customer proposing to remove such facilities from service shall provide prior notice of such activities to the Transmission Provider and the Interconnected Transmission Owner, and the Interconnected Entities shall coordinate all scheduling of planned facility outages with Transmission Provider, in accordance with applicable sections of the Operating Agreement, the PJM Manuals and any other applicable operating guidelines or directives of the Transmission Provider. Subject to the foregoing, the Interconnected Entity scheduling a facility outage shall use Reasonable Efforts to coordinate such outage with the other Interconnected Entity's scheduled outages.

5.3.3 Outages Required for Maintenance:

Subject to any necessary approval by Transmission Provider, each Interconnected Entity shall provide necessary equipment outages to allow the other Interconnected Entity to perform periodic maintenance, repair or replacement of its facilities and such outages shall be provided at mutually agreeable times, unless conditions arise which an Interconnected Entity believes, in accordance with Good Utility Practice, may endanger persons or property.

5.3.4 Rescheduling of Planned Outages:

To the extent so provided by the Tariff, the Operating Agreement, and the PJM Manuals, an Interconnected Entity may seek compensation from Transmission Provider for any costs related to rejection by Transmission Provider of a request of such Interconnected Entity for a planned maintenance outage.

5.3.5 Outage Restoration:

If an outage on an Interconnected Entity's facilities adversely affects the other Interconnected Entity's facilities, the Interconnected Entity that owns or controls the facility that is out of service shall use Reasonable Efforts to restore the facility to service promptly.

5.4 Inspections and Testing:

Each Interconnected Entity shall perform routine inspection and testing of its facilities and equipment in accordance with Good Utility Practice as may be necessary to ensure the continued interconnection of the Customer Facility with the Transmission System in a safe and reliable manner. Each Interconnected Entity shall have the right, upon advance written notice, to request reasonable additional testing of an Interconnected Entity's facilities for good cause, as may be in accordance with Good Utility Practice.

5.5 Right to Observe Testing:

Each Interconnected Entity shall notify the other Interconnected Entity in advance of its performance of tests of its portion of the Interconnection Facilities. The other Interconnected Entity shall, at its own expense, have the right, but not the obligation, to:

(a) Observe the other Party's tests and/or inspection of any of its system protection facilities and other protective equipment, including power system stabilizers;

(b) Review the settings of the other Party's system protection facilities and other protective equipment;

(c) Review the other Party's maintenance record relative to the Interconnection Facilities, system protection facilities and other protective equipment; and

(d) Exercise these rights from time to time as it deems necessary upon reasonable notice to the other Party.

5.6 Secondary Systems:

Each Interconnected Entity agrees to cooperate with the other in the inspection, maintenance, and testing of those Secondary Systems directly affecting the operation of an Interconnected Entity's facilities and equipment which may reasonably be expected to affect the other Interconnected Entity's facilities. Each Interconnected Entity shall provide advance notice to the other Interconnected Entity before undertaking any work on such equipment, especially in electrical circuits involving circuit breaker trip and close contacts, current transformers, or potential transformers.

5.7 Access Rights:

Each Interconnected Entity shall provide the other Interconnected Entity access to areas under its control as reasonably necessary to permit the other Interconnected Entity to perform its obligations under this Appendix 2, including operation and maintenance obligations. An Interconnected Entity that obtains such access shall comply with all safety rules applicable to the area to which access is obtained. Each Interconnected Entity agrees to inform the other Interconnected Entity's representatives of safety rules applicable to an area.

5.8 Observation of Deficiencies:

If an Interconnection Party observes any Abnormal Condition on, or becomes aware of a lack of scheduled maintenance and testing with respect to, an Interconnection Party's facilities and equipment that might reasonably be expected to adversely affect the observing Interconnection Party's facilities and equipment, the observing Interconnection Party shall provide prompt notice under the circumstances to the appropriate Interconnection Party, and such Interconnection Party shall consider such notice in accordance with Good Utility Practice. Any Interconnection Party's review, inspection, and approval related to the other Interconnection Party's facilities and equipment shall be limited to the purpose of assessing the safety, reliability, protection and control of the Transmission System and shall not be construed as confirming or endorsing the design of

such facilities and equipment, or as a warranty of any type, including safety, durability or reliability thereof. Notwithstanding the foregoing, the observing Interconnection Party shall have no liability whatsoever for failure to give a deficiency notice to the other Interconnection Party and the Interconnected Entity that owns the relevant Interconnection Facilities shall remain fully liable for its failure to determine and correct deficiencies and defects in its facilities and equipment.

6 Emergency Operations

6.1 Obligations:

Subject to Applicable Laws and Regulations, each Interconnection Party shall comply with the Emergency Condition procedures of NERC, the Applicable Regional Entity, Transmission Provider, the Interconnected Transmission Owner and Interconnection Customer.

6.2 Notice:

Each Interconnection Party shall notify the other parties promptly when it becomes aware of an Emergency Condition that may reasonably be expected to affect operation of the Customer Facility, the Customer Interconnection Facilities, the Transmission Owner Interconnection Facilities, or the Transmission System. To the extent information is known, the notification shall describe the Emergency Condition, the extent of the damage or deficiency, the expected effect on the facilities and/or operation thereof, its anticipated duration and the corrective action taken and/or to be taken. The initial notice shall be followed as soon as practicable with written notice.

6.3 Immediate Action:

An Interconnection Party becoming aware of an Emergency Condition may take such action, including disconnection of the Customer Facility from the Transmission System, as is reasonable and necessary in accord with Good Utility Practice (i) to prevent, avoid, or mitigate injury or danger to, or loss of, life or property; (ii) to preserve the reliability of, in the case of Interconnection Customer, the Customer Facility, or, in the case of Transmission Provider or the Interconnected Transmission Owner, the Transmission System and interconnected sub-transmission and distribution facilities; or (iii) to expedite restoration of service. Unless, in Interconnection Customer's reasonable judgment, immediate action is required to prevent imminent loss of life or property, Interconnection Customer shall obtain the consent of Transmission Provider and the Interconnected Transmission Owner prior to performing any manual switching operations at the Customer Facility or the Generation Interconnection Facilities. Each Interconnection Party shall use Reasonable Efforts to minimize the effect of its actions during an Emergency Condition on the facilities and operations of the other Interconnection Parties.

6.4 Record-Keeping Obligations:

Each Interconnection Party shall keep and maintain records of actions taken during an Emergency Condition that may reasonably be expected to affect the other parties' facilities and make such records available for audit in accordance with Section 19.3 of this Appendix 2.

7 Safety

7.1 General:

Each Interconnected Entity shall perform all work under this Appendix 2 that may reasonably be expected to affect the other Interconnected Entity in accordance with Good Utility Practice and all Applicable Laws and Regulations pertaining to the safety of persons or property. An Interconnected Entity performing work within the boundaries of the other Interconnected Entity's facilities must abide by the safety rules applicable to the site. Each party agrees to inform the other party's representatives of applicable safety rules that must be obeyed on the premises.

7.2 Environmental Releases:

Each Interconnected Entity shall notify the other Interconnection Parties, first orally and promptly thereafter in writing, of the release of any Hazardous Substances, any asbestos or lead abatement activities, or any type of remediation activities, related to the Customer Facility or the Interconnection Facilities, any of which may reasonably be expected to affect one or both of the other parties. The notifying party shall (i) provide the notice as soon as possible; (ii) make a good faith effort to provide the notice within twenty-four (24) hours after the party becomes aware of the occurrence; and (iii) promptly furnish to the other parties copies of any publicly available reports filed with any governmental agencies addressing such events.

8 Metering

8.1 General:

Interconnection Customer shall have the right to install, own, operate, test and maintain the necessary Metering Equipment. In the event that Interconnection Customer exercises this option, the Interconnected Transmission Owner shall have the right to install its own check meter(s), at its own expense, at or near the location of the Metering Equipment. If both Interconnection Customer and Interconnected Transmission Owner install meters, the meter installed by the Interconnection Customer shall control unless it is determined by testing to be inaccurate. If the Interconnection Customer does not exercise the option provided by the first sentence of this section, the Interconnected Transmission Owner shall have the option to install, own, operate, test and maintain all necessary Metering Equipment at Interconnection Customer's expense. If the Interconnected Transmission Owner does not exercise this option, the Interconnection Customer shall install, own, operate, test and maintain all necessary Metering Equipment. Transmission Provider shall determine the location where the Metering Equipment shall be installed, after consulting with Interconnection Customer and the Interconnected Transmission Owner. All Metering Equipment shall be tested prior to any operation of the Customer Facility. Power flows to and from the Customer Facility shall be compensated to the Point of Interconnection, or, upon the mutual agreement of the Interconnected Transmission Owner and the Interconnection Customer, to another location.

8.2 Standards:

All Metering Equipment installed pursuant to this Appendix 2 to be used for billing and payments shall be revenue quality Metering Equipment and shall satisfy applicable ANSI standards and Transmission Provider's metering standards and requirements. Nothing in this Appendix 2 precludes the use of Metering Equipment for any retail services of the Interconnected Transmission Owner provided, however, that in such circumstances Applicable Laws and Regulations shall control.

8.3 Testing of Metering Equipment:

The Interconnected Entity that, pursuant to Section 8.1 of this Appendix 2, owns the Metering Equipment shall operate, maintain, inspect and test all Metering Equipment upon installation and at least once every two years thereafter. Upon reasonable request by the other Interconnected Entity, the owner of the Metering Equipment shall inspect or test the Metering Equipment more frequently than every two years, but in no event more frequently than three times in any 24-month period. The owner of the Metering Equipment shall give reasonable notice to the Interconnection Parties of the time when any inspection or test of the owner's Metering Equipment shall take place, and the other parties may have representatives present at the test or inspection. If Metering Equipment is found to be inaccurate or defective, it shall be adjusted, repaired or replaced in order to provide accurate metering. Where the Interconnected Transmission Owner owns the Metering Equipment, the expense of such adjustment, repair or replacement shall be borne by the Interconnection Customer, except that the Interconnection Customer shall not be responsible for such expenses where the inaccuracy or defect is caused by the Interconnected Transmission Owner. If Metering Equipment fails to register, or if the measurement made by Metering Equipment during a test varies by more than one percent from the measurement made by the standard meter used in the test, the owner of the Metering Equipment shall inform Transmission Provider, and the Transmission Provider shall inform the other Interconnected Entity, of the need to correct all measurements made by the inaccurate meter for the period during which the inaccurate measurements were made, if the period can be determined. If the period of inaccurate measurement cannot be determined, the correction shall be for the period immediately preceding the test of the Metering Equipment that is equal to one-half of the time from the date of the last previous test of the Metering Equipment, provided that the period subject to correction shall not exceed nine (9) months.

8.4 Metering Data:

At Interconnection Customer's expense, the metered data shall be telemetered (a) to a location designated by Transmission Provider; (b) to a location designated by the Interconnected Transmission Owner, unless the Interconnected Transmission Owner agrees otherwise; and (c) to a location designated by Interconnection Customer. Data from the Metering Equipment at the Point of Interconnection shall be used, under normal operating conditions, as the official measurement of the amount of energy delivered from or to the Customer Facility to the Point of Interconnection, provided that the Transmission Provider's rules applicable to Station Power as set forth at Tariff, Attachment K-Appendix, section 1.7.10(d) shall control with respect to a Generation Interconnection Customer's consumption of Station Power.

8.5 Communications

8.5.1 Interconnection Customer Obligations:

Interconnection Customer shall install and maintain satisfactory operating communications with Transmission Provider's system dispatcher or its other designated representative and with the Interconnected Transmission Owner. Interconnection Customer shall provide standard voice line, dedicated voice line and facsimile communications at its Customer Facility control room through use of the public telephone system. Interconnection Customer also shall provide and maintain backup communication links with both Transmission Provider and Interconnected Transmission Owner for use during abnormal conditions as specified by Transmission Provider and Interconnected Transmission Owner, respectively. Interconnection Customer further shall provide the dedicated data circuit(s) necessary to provide Interconnection Customer data to the Transmission Provider and Interconnected Transmission Owner as necessary to conform with Applicable Technical Requirements and Standards.

8.5.2 Remote Terminal Unit:

Unless otherwise deemed unnecessary by Transmission Provider and Interconnected Transmission Owner, as indicated in the Interconnection Service Agreement, prior to any operation of the Customer Facility, a remote terminal unit, or equivalent data collection and transfer equipment acceptable to the Interconnection Parties, shall be installed by Interconnection Customer, or by the Interconnected Transmission Owner at Interconnection Customer's expense, to gather accumulated and instantaneous data to be telemetered to the location(s) designated by Transmission Provider and Interconnected Transmission Owner through use of a dedicated point-to-point data circuit(s) as indicated in Section 8.5.1 of this Appendix 2. Instantaneous, bi-directional real power and, with respect to a Generation Interconnection Customer's Customer Facility, reactive power flow information, must be telemetered directly to the location(s) specified by Transmission Provider and the Interconnected Transmission Owner.

8.5.3. Phasor Measurement Units (PMUs):

An Interconnection Customer entering the New Services Queue on or after October 1, 2012 with a proposed new Customer Facility that has a Maximum Facility Output equal to or greater than 100 MW shall install and maintain, at its expense, phasor measurement units (PMUs). PMUs shall be installed on the Customer Facility low side of the generator step-up transformer, unless it is a non-synchronous generation facility, in which case the PMUs shall be installed on the Customer Facility side of the Point of Interconnection. The PMUs must be capable of performing phasor measurements at a minimum of 30 samples per second which are synchronized via a high-accuracy satellite clock. To the extent Interconnection Customer installs similar quality equipment, such as relays or digital fault recorders, that can collect data at least at the same rate as PMUs and which data is synchronized via a high-accuracy satellite clock, such equipment would satisfy this requirement. As provided for in the PJM Manuals, an Interconnection Customer shall be required to install and maintain, at its expense, PMU equipment which includes the communication circuit capable of carrying the PMU data to a local data concentrator, and then transporting the information continuously to the Transmission Provider; as well as store the PMU data locally for thirty days. Interconnection Customer shall provide to Transmission Provider all necessary and

requested information through the Transmission Provider synchrophasor system, including the following: (a) gross MW and MVAR measured at the Customer Facility side of the generator step-up transformer (or, for a non-synchronous generation facility, to be measured at the Customer Facility side of the Point of Interconnection); (b) generator terminal voltage; (c) generator terminal frequency; and (d) generator field voltage and current, where available. The Transmission Provider will install and provide for the ongoing support and maintenance of the network communications linking the data concentrator to the Transmission Provider. Additional details regarding the requirements and guidelines of PMU data and telecommunication of such data are contained in the PJM Manuals.

9 Force Majeure

9.1 Notice:

An Interconnection Party that is unable to carry out an obligation imposed on it by this Appendix 2 due to Force Majeure shall notify the other parties in writing or by telephone within a reasonable time after the occurrence of the cause relied on.

9.2 Duration of Force Majeure:

An Interconnection Party shall not be responsible, or considered to be in Breach or Default under this Interconnection Service Agreement, for any non-performance, any interruption or failure of service, deficiency in the quality or quantity of service, or any other failure to perform any obligation hereunder to the extent that such failure or deficiency is due to Force Majeure. An Interconnection Party shall be excused from whatever performance is affected only for the duration of the Force Majeure and while the Interconnection Party exercises Reasonable Efforts to alleviate such situation. As soon as the non-performing Interconnection Party is able to resume performance of its obligations excused because of the occurrence of Force Majeure, such Interconnection Party shall resume performance and give prompt notice thereof to the other parties.

9.3 Obligation to Make Payments:

Any Interconnection Party's obligation to make payments for services shall not be suspended by Force Majeure.

9.4 Definition of Force Majeure:

For the purposes of this section, an event of force majeure shall mean any cause beyond the control of the affected Interconnection Party or Construction Party, including but not restricted to, acts of God, flood, drought, earthquake, storm, fire, lightning, epidemic, war, riot, civil disturbance or disobedience, labor dispute, labor or material shortage, sabotage, acts of public enemy, explosions, orders, regulations or restrictions imposed by governmental, military, or lawfully established civilian authorities, which, in any of the foregoing cases, by exercise of due diligence such party could not reasonably have been expected to avoid, and which, by the exercise of due diligence, it has been unable to overcome. Force majeure does not include (i) a failure of performance that is due to an affected party’s own negligence or intentional wrongdoing; (ii) any removable or

remediable causes (other than settlement of a strike or labor dispute) which an affected party fails to remove or remedy within a reasonable time; or (iii) economic hardship of an affected party.

10 Charges

10.1 Specified Charges:

If and to the extent required by the Interconnected Transmission Owner, after the Initial Operation of the Customer Facility, Interconnection Customer shall pay one or more of the types of recurring charges described in this section to compensate the Interconnected Transmission Owner for costs incurred in performing certain of its obligations under this Appendix 2. All such charges shall be stated in Schedule E of the Interconnection Service Agreement. Interconnected Transmission Owner shall provide Transmission Provider and Interconnection Customer with appropriate cost data, schedules and/or written testimony in support of any charges under this section in such manner and at such time as to allow Transmission Provider to include such materials in its filing of the Interconnection Service Agreement with the FERC. Transmission Provider will deliver a copy of such filing to Interconnection Customer. Permissible charges under this section may include:

(a) Administration Charge — Any such charge may recover only the costs and expenses incurred by the Interconnected Transmission Owner in connection with administrative obligations such as the preparation of bills, the processing of Customer Facility-specific data on energy delivered at the Point of Interconnection and costs incurred in similar types of administrative processes related to Interconnection Customer's Interconnection Service. An Administration Charge shall not be permitted to the extent that the Interconnected Transmission Owner's other charges to the Interconnection Customer under the same Interconnection Service Agreement include an allocation of Interconnected Transmission Owner's administrative and general expenses and/or other corporate overhead costs.

(b) Metering Charge — Any such charge may recover only the Interconnected Transmission Owner's costs and expenses associated with operation, maintenance, inspection, testing, and carrying or capital replacement charges for any Metering Equipment that is owned by the Interconnected Transmission Owner.

(c) Telemetering Charge — Any such charge may recover only the Interconnected Transmission Owner's costs and expenses associated with operation, maintenance, inspection, testing, and carrying or capital replacement charges for any telemetering equipment that is owned by the Interconnected Transmission Owner and that is used exclusively in conjunction with Interconnection Service for the Interconnection Customer.

(d) Customer Facility Operations and Maintenance Charge — Any such charge may recover only the Interconnected Transmission Owner's costs and expenses associated with operation, maintenance, inspection, testing, modifications, taxes and carrying or capital replacement charges for Attachment Facilities related to the Interconnection Customer's Interconnection Service and that are owned by the Interconnected Transmission Owner, provided that

(i) any such charge shall exclude costs and expenses associated with Transmission Owner Interconnection Facilities owned by the Interconnected Transmission Owner that are radial line facilities that serve load in addition to an Interconnection Customer; and

(ii) except as otherwise provided by Applicable Laws and Regulations, any such charge may include only an allocated share, derived in accordance with the allocations contained in the Facilities Study, of costs and expenses associated with Transmission Owner Interconnection Facilities owned by the Interconnected Transmission Owner that are radial line facilities that serve more than one Interconnection Customer. At the discretion of the affected Interconnected Entities, a Customer Facility Operations and Maintenance Charge authorized under this section may apply on a per-incident basis or on a monthly or other periodic basis.

(e) Other Charges — Any other charges applicable to the Interconnection Customer, as mutually agreed upon by the Interconnection Customer and the Interconnected Transmission Owner and as accepted by the FERC as part of an Interconnection Service Agreement.

10.2 FERC Filings:

To the extent required by law or regulation, each Interconnection Party shall seek FERC acceptance or approval of its respective charges or the methodology for the calculation of such charges.

11 Security, Billing And Payments

11.1 Recurring Charges Pursuant to Section 10:

The following provisions shall apply with respect to recurring charges applicable to Interconnection Service after Initial Operation of the Customer Facility pursuant to Section 10 of this Appendix 2.

11.1.1 General:

Except as, and to the extent, otherwise provided in the Interconnection Service Agreement, billing and payment of any recurring charges applicable to Interconnection Service after Initial Operation of the Customer Facility pursuant to Section 10 of this Appendix 2 shall be in accordance with Section 7 of the Tariff. The Interconnected Transmission Owner shall provide Transmission Provider with all necessary information and supporting data that Transmission Provider may reasonably require to administer billing for and payment of applicable charges under this Appendix 2. Transmission Provider shall remit to the Interconnected Transmission Owner revenues received in payment of Interconnected Transmission Owner's charges to Interconnection Customer under this Appendix 2 upon Transmission Provider's receipt of such revenues. At Transmission Provider's reasonable discretion, charges to Interconnection Customer and remittances to Interconnected Transmission Owner under this Appendix 2 may be netted against other amounts owed by or to such parties under the Tariff.

11.1.2 Billing Disputes:

In the event of a billing dispute between Transmission Provider and Interconnection Customer, Transmission Provider shall continue to provide interconnection service under this Appendix 2 as long as Interconnection Customer (i) continues to make all payments not in dispute, and (ii) pays to Transmission Provider or into an independent escrow account the portion of the invoice in dispute, pending resolution of such dispute. If Interconnection Customer fails to meet these two requirements for continuation of service, then Transmission Provider shall so inform the Interconnection Parties and may provide notice to Interconnection Customer of a Breach pursuant to Section 15 of this Appendix 2. Within thirty days after the resolution of the dispute, the Interconnection Party that owes money to the other Interconnection Party shall pay the amount due with interest calculated in accord with Section 11.4.

11.2 Costs for Transmission Owner Interconnection Facilities:

The following provisions shall apply with respect to charges for the Costs of the Interconnected Transmission Owner for which the Interconnection Customer is responsible.

11.2.1 Adjustments to Security:

The Security provided by Interconnection Customer at or before execution of the Interconnection Service Agreement (a) shall be reduced as portions of the work are completed, and/or (b) shall be increased or decreased as required to reflect adjustments to Interconnection Customer's cost responsibility, as determined in accordance with Section 217, to correspond with changes in the Scope of Work developed in accordance with Transmission Provider's scope change process for interconnection projects set forth in the PJM Manuals.

11.2.2 Invoice:

The Interconnected Transmission Owner shall provide Transmission Provider a quarterly statement of the Interconnected Transmission Owner's scheduled expenditures during the next three months for, as applicable (a) the design, engineering and construction of, and/or for other charges related to, construction of the Interconnection Facilities for which the Interconnected Transmission Owner is responsible under the Interconnection Service Agreement and the Interconnection Construction Service Agreement, or (b) in the event that the Interconnection Customer exercises the Option to Build pursuant to Tariff, Attachment P, Appendix 2, section 3.2.3.1, for the Interconnected Transmission Owner's oversight costs (i.e. costs incurred by the Transmission Owner when engaging in oversight activities to satisfy itself that the Interconnection Customer is complying with the Transmission Owner's standards and specifications for the construction of facilities) associated with Interconnection Customer's building Transmission Owner Attachment Facilities and Direct Connection Network Upgrades, including but not limited to Costs for tie-in work and Cancellation Costs. Interconnected Transmission Owner oversight costs shall be consistent with Tariff, Attachment P, Appendix 2, section 3.2.3.2(a)(12). Transmission Provider shall bill Interconnection Customer on behalf of the Interconnected Transmission Owner, for the Interconnected Transmission Owner's expected Costs during the subsequent three months. Interconnection Customer shall pay each bill within twenty (20) days

after receipt thereof. Upon receipt of each of Interconnection Customer's payments of such bills, Transmission Provider shall reimburse the Interconnected Transmission Owner. Interconnection Customer may request that the Transmission Provider provide a quarterly cost reconciliation. Such a quarterly cost reconciliation will have a one-quarter lag, e.g., reconciliation of Costs for the first calendar quarter of work will be provided at the start of the third calendar quarter of work, provided, however, that Section 11.2.3 of this Appendix 2 shall govern the timing of the final cost reconciliation upon completion of the work.

11.2.3 Final Invoice:

Within 120 days after the Interconnected Transmission Owner completes construction and installation of the Interconnection Facilities for which the Interconnected Transmission Owner is responsible under the Interconnection Service Agreement and the Interconnection Construction Service Agreement, Transmission Provider shall provide Interconnection Customer with an accounting of, and the appropriate Construction Party shall make any payment to the other that is necessary to resolve, any difference between (a) Interconnection Customer's responsibility under the Tariff for the actual Cost of such facilities, and (b) Interconnection Customer's previous aggregate payments to Transmission Provider for the Costs of such facilities. Notwithstanding the foregoing, however, Transmission Provider shall not be obligated to make any payment to either the Interconnection Customer or the Interconnected Transmission Owner that the preceding sentence requires it to make unless and until the Transmission Provider has received the payment that it is required to refund from the Construction Party owing the payment.

11.2.4 Disputes:

In the event of a billing dispute between any of the Construction Parties, Transmission Provider and the Interconnected Transmission Owner shall continue to perform their respective obligations pursuant to this Interconnection Service Agreement and any related Interconnection Construction Service Agreements so long as (a) Interconnection Customer continues to make all payments not in dispute, and (b) the Security held by the Transmission Provider while the dispute is pending exceeds the amount in dispute, or (c) Interconnection Customer pays to Transmission Provider or into an independent escrow account the portion of the invoice in dispute, pending resolution of such dispute. If Interconnection Customer fails to meet any of these requirements, then Transmission Provider shall so inform the other Construction Parties and Transmission Provider or the Interconnected Transmission Owner may provide notice to Interconnection Customer of a Breach pursuant to Section 15 of this Appendix 2.

11.3 No Waiver:

Payment of an invoice shall not relieve Interconnection Customer from any other responsibilities or obligations it has under this Appendix 2, nor shall such payment constitute a waiver of any claims arising hereunder.

11.4 Interest:

Interest on any unpaid amounts shall be calculated in accordance with the methodology specified for interest on refunds in the FERC's regulations at 18 C.F.R. § 35.19a(a)(2)(iii). Interest on delinquent amounts shall be calculated from the due date of the bill to the date of payment.

12.0 Assignment

12.1 Assignment with Prior Consent:

Except as provided in Section 12.2 to this Appendix 2, no Interconnection Party shall assign its rights or delegate its duties, or any part of such rights or duties, under the Interconnection Service Agreement without the written consent of the other Interconnection Parties, which consent shall not be unreasonably withheld, conditioned, or delayed. Any such assignment or delegation made without such written consent shall be null and void. An Interconnection Party may make an assignment in connection with the sale, merger, or transfer of a substantial portion or all of its properties including the Interconnection Facilities which it owns, so long as the assignee in such a sale, merger, or transfer assumes in writing all rights, duties and obligations arising under this Interconnection Service Agreement. In addition, the Interconnected Transmission Owner shall be entitled, subject to Applicable Laws and Regulations, to assign the Interconnection Service Agreement to any Affiliate or successor that owns and operates all or a substantial portion of the Interconnected Transmission Owner's transmission facilities.

12.2 Assignment Without Prior Consent

12.2.1 Assignment to Owners:

Interconnection Customer may assign the Interconnection Service Agreement without the Interconnected Transmission Owner's or Transmission Provider's prior consent to any Affiliate or person that purchases or otherwise acquires, directly or indirectly, all or substantially all of the Customer Facility and the Customer Interconnection Facilities, provided that prior to the effective date of any such assignment, the assignee shall demonstrate that, as of the effective date of the assignment, the assignee has the technical and operational competence to comply with the requirements of this Interconnection Service Agreement and assumes in a writing provided to the Interconnected Transmission Owner and Transmission Provider all rights, duties, and obligations of Interconnection Customer arising under this Interconnection Service Agreement. However, any assignment described herein shall not relieve or discharge the Interconnection Customer from any of its obligations hereunder absent the written consent of the Transmission Provider, such consent not to be unreasonably withheld, conditioned or delayed.

12.2.2 Assignment to Lenders:

Interconnection Customer may, without the consent of the Transmission Provider or the Interconnected Transmission Owner, assign the Interconnection Service Agreement to any Project Finance Entity(ies), provided that such assignment does not alter or diminish Interconnection Customer's duties and obligations under this Interconnection Service Agreement. If Interconnection Customer provides the Interconnected Transmission Owner with notice of an assignment to any Project Finance Entity(ies) and identifies such Project Finance Entities as

contacts for notice purposes pursuant to Section 21 of this Appendix 2, the Transmission Provider or Interconnected Transmission Owner shall provide notice and reasonable opportunity for such entity(ies) to cure any Breach under this Interconnection Service Agreement in accordance with this Interconnection Service Agreement. Transmission Provider or Interconnected Transmission Owner shall, if requested by such lenders, provide such customary and reasonable documents, including consents to assignment, as may be reasonably requested with respect to the assignment and status of the Interconnection Service Agreement, provided that such documents do not alter or diminish the rights of the Transmission Provider or Interconnected Transmission Owner under this Interconnection Service Agreement, except with respect to providing notice of Breach to a Project Finance Entity. Upon presentation of the Transmission Provider and/or the Interconnected Transmission Owner's invoice therefor, Interconnection Customer shall pay the Transmission Provider and/or the Interconnected Transmission Owner's reasonable documented cost of providing such documents and certificates. Any assignment described herein shall not relieve or discharge the Interconnection Customer from any of its obligations hereunder absent the written consent of the Interconnected Transmission Owner and Transmission Provider.

12.3 Successors and Assigns:

This Interconnection Service Agreement and all of its provisions are binding upon, and inure to the benefit of, the Interconnection Parties and their respective successors and permitted assigns.

13 Insurance

13.1 Required Coverages For Generation Resources Of More Than 20 Megawatts or Merchant Transmission Facilities:

Each Interconnected Entity shall maintain insurance as described in paragraphs (a) through (e) below. All insurance shall be procured from insurance companies rated "A-," VII or better by AM Best and authorized to do business in a state or states in which the Interconnection Facilities are located. Failure to maintain required insurance shall be a Breach of the Interconnection Service Agreement.

(a) Workers Compensation insurance with statutory limits, as required by the state and/or jurisdiction in which the work is to be performed, and employer's liability insurance with limits of not less than one million dollars ($1,000,000).

(b) Commercial General Liability Insurance and/or Excess Liability Insurance covering liability arising out of premises, operations, personal injury, advertising , products and completed operations coverage, independent contractors coverage, liability assumed under an insured contract, coverage for pollution to the extent normally available and punitive damages to the extent allowable under applicable law, with limits of not less than one million dollars ($1,000,000) per occurrence/one million dollars ($1,000,000) general aggregate/one million dollars ($1,000,000) products and completed operations aggregate.

(c) Business/Commercial Automobile Liability Insurance for coverage of owned and non-owned and hired vehicles, trailers or semi-trailers designed for travel on public roads, with a

minimum, combined single limit of one million dollars ($1,000,000) each accident for bodily injury, including death, and property damage.

(d) Excess and/or Umbrella Liability Insurance with a limit of liability of not less than twenty million dollars ($20,000,000) per occurrence. These limits apply in excess of the employer's liability, commercial general liability and business/commercial automobile liability coverages described above. This requirement can be met alone or via a combination of primary, excess and/or umbrella insurance.

(e) Professional Liability Insurance providing errors, omissions and/or malpractice coverage in the amount of five million dollars ($5,000,000) per occurrence/aggregate. Coverage shall be provided for the Interconnected Entity's duties, responsibilities and performance outlined in this Appendix 2, the Interconnection Service Agreement, and if applicable, the Interconnection Construction Service Agreement.

An Interconnected Entity may meet the Professional Liability Insurance requirements by requiring third-party contractors, designers, or engineers, or other parties that are responsible for design work associated with the transmission facilities or Interconnection Facilities necessary for the interconnection to procure professional liability insurance in the amounts and upon the terms prescribed by this section 13.1(e), and providing evidence of such insurance to the other Interconnected Entity. Such insurance shall be procured from companies rated "A-," VII or better by AM Best and authorized to do business in a state or states in which the Interconnection Facilities are located. Nothing in this section relieves the Interconnected Entity from complying with the insurance requirements. In the event that the policies of the designers, engineers, or other parties used to satisfy the Interconnected Entity's insurance obligations under this section become invalid for any reason, including but not limited to, (i) the policy(ies) lapsing or otherwise terminating or expiring; (ii) the coverage limits of such policy(ies) are decreased; or (iii) the policy(ies) do not comply with the terms and conditions of the Tariff; Interconnected Entity shall be required to procure insurance sufficient to meet the requirements of this section, such that there is no lapse in insurance coverage. Notwithstanding the foregoing, in the event an Interconnected Entity will not design or construct or cause to design or construct any new transmission facilities or Interconnection Facilities, Transmission Provider, in its discretion, may waive the requirement that an Interconnected Entity maintain the Professional Liability Insurance pursuant to this section.

13.1A. Required Coverages For Generation Resources Of 20 Megawatts Or Less:

Each Interconnected Entity shall maintain the types of insurance as described in section 13.1 paragraphs (a) through (e) in an amount sufficient to insure against all reasonably foreseeable direct liabilities given the size and nature of the generating equipment being interconnected, the interconnection itself, and the characteristics of the system to which the interconnection is made. Additional insurance may be required by the Interconnection Customer, as a function of owning and operating a Generating Facility. All insurance shall be procured from insurance companies rated "A-," VII or better by AM Best and authorized to do business in a state or states in which the Interconnection Facilities are located. Failure to maintain required insurance shall be a Breach of the Interconnection Service Agreement.

13.2 Additional Insureds:

The Commercial General Liability, Business/Commercial Automobile Liability and Excess and/or Umbrella Liability policies procured by each Interconnected Entity (the "Insuring Interconnected Entity") shall include each other Interconnection Party (the "Insured Interconnection Party"), and its respective officers, agents and employees as additional insureds, providing all standard coverages and covering liability of the Insured Interconnection Party arising out of bodily injury and/or property damage (including loss of use) in any way connected with the operations, performance, or lack of performance under this Interconnection Service Agreement.

13.3 Other Required Terms:

The above-mentioned insurance policies (except workers' compensation) shall provide the following:

(a) Each policy shall contain provisions that specify that it is primary and non contributory for any liability arising out of that party's negligence, and shall apply to such extent without consideration for other policies separately carried and shall state that each insured is provided coverage as though a separate policy had been issued to each, except the insurer's liability shall not be increased beyond the amount for which the insurer would have been liable had only one insured been covered. Each Insuring Interconnected Entity shall be responsible for its respective deductibles or retentions.

(b) If any coverage is written on a Claims First Made Basis, continuous coverage shall be maintained or an extended discovery period will be exercised for a period of not less than two (2) years after termination of the Interconnection Service Agreement.

(c) Provide for a waiver of all rights of subrogation which the Insuring Interconnected Entity's insurance carrier might exercise against the Insured Interconnection Party.

13.3A No Limitation of Liability:

The requirements contained herein as to the types and limits of all insurance to be maintained by the Interconnected Entities are not intended to and shall not in any manner, limit or qualify the liabilities and obligations assumed by the Interconnection Parties under the Interconnection Service Agreement.

13.4 Self-Insurance:

Notwithstanding the foregoing, each Interconnected Entity may self-insure to meet the minimum insurance requirements of this Section 13 of this Appendix 2 to the extent it maintains a self-insurance program, provided that such Interconnected Entity's senior secured debt is rated at investment grade or better by Standard & Poor's and its self-insurance program meets the minimum insurance requirements of this Section 13. For any period of time that an Interconnected Entity's senior secured debt is unrated by Standard & Poor's or is rated at less than investment

grade by Standard & Poor's, such Party shall comply with the insurance requirements applicable to it under this Section 13. In the event that an Interconnected Entity is permitted to self-insure pursuant to this section, it shall notify the other Interconnection Parties that it meets the requirements to self-insure and that its self-insurance program meets the minimum insurance requirements in a manner consistent with that specified in Section 13.5 of this Appendix 2.

13.5 Notices; Certificates of Insurance:

All policies of insurance shall provide for thirty days prior written notice of cancellation or material adverse change. If the policies of insurance do not or cannot be endorsed to provide thirty days prior notice of cancellation or material adverse change, each Interconnected Entity shall provide the other Interconnected Entities with thirty days prior written notice of cancellation or material adverse change to any of the insurance required in this agreement. Each Interconnected Entity shall provide the other with certificates of insurance prior to Initial Operation of the Customer Facility and thereafter at such time intervals as they shall mutually agree upon, provided that such interval shall not be less than one year. All certificates of insurance shall indicate that the certificate holder is included as an additional insured under the Commercial General Liability, Business/Commercial Automobile Liability and Excess and/or Umbrella Liability coverages, and that this insurance is primary with a waiver of subrogation included in favor of the other Interconnected Entities.

13.6 Subcontractor Insurance:

In accord with Good Utility Practice, each Interconnected Entity shall require each of its subcontractors to maintain and provide evidence of insurance coverage of types, and in amounts, commensurate with the risks associated with the services provided by the subcontractor. Bonding of contractors or subcontractors shall be at the hiring Interconnected Entity's discretion, but regardless of bonding, the hiring principal shall be responsible for the performance or non-performance of any contractor or subcontractor it hires.

13.7 Reporting Incidents

The Interconnection Parties shall report to each other in writing as soon as practical all accidents or occurrences resulting in injuries to any person, including death, and any property damage arising out of the Interconnection Service Agreement.

14 Indemnity

14.1 Indemnity:

Each Interconnection Party shall indemnify and hold harmless the other Interconnection Parties, and the other Interconnection Parties' officers, shareholders, stakeholders, members, managers, representatives, directors, agents and employees, and Affiliates, from and against any and all loss, liability, damage, cost or expense to third parties, including damage and liability for bodily injury to or death of persons, or damage to property or persons (including reasonable attorneys' fees and expenses, litigation costs, consultant fees, investigation fees, sums paid in settlements of claims,

penalties or fines imposed under Applicable Laws and Regulations, and any such fees and expenses incurred in enforcing this indemnity or collecting any sums due hereunder) (collectively, "Loss") to the extent arising out of, in connection with, or resulting from (i) the indemnifying Interconnection Party's breach of any of the representations or warranties made in, or failure of the indemnifying Interconnection Party or any of its subcontractors to perform any of its obligations under, this Interconnection Service Agreement (including Appendix 2), or (ii) the negligence or willful misconduct of the indemnifying Interconnection Party or its contractors; provided, however, that no Interconnection Party shall have any indemnification obligations under this Section 14.1 in respect of any Loss to the extent the Loss results from the negligence or willful misconduct of the Interconnection Party seeking indemnity.

14.2 Indemnity Procedures:

Promptly after receipt by a Person entitled to indemnity ("Indemnified Person") of any claim or notice of the commencement of any action or administrative or legal proceeding or investigation as to which the indemnity provided for in Section 14.1 may apply, the Indemnified Person shall notify the indemnifying Interconnection Party of such fact. Any failure of or delay in such notification shall not affect an Interconnection Party's indemnification obligation unless such failure or delay is materially prejudicial to the indemnifying Interconnection Party. The Indemnified Person shall cooperate with the indemnifying Interconnection Party with respect to the matter for which indemnification is claimed. The indemnifying Interconnection Party shall have the right to assume the defense thereof with counsel designated by such indemnifying Interconnection Party and reasonably satisfactory to the Indemnified Person. If the defendants in any such action include one or more Indemnified Persons and the indemnifying Interconnection Party and if the Indemnified Person reasonably concludes that there may be legal defenses available to it and/or other Indemnified Persons which are different from or additional to those available to the indemnifying Interconnection Party, the Indemnified Person shall have the right to select separate counsel to assert such legal defenses and to otherwise participate in the defense of such action on its own behalf. In such instances, the indemnifying Interconnection Party shall only be required to pay the fees and expenses of one additional attorney to represent an Indemnified Person or Indemnified Persons having such differing or additional legal defenses. The Indemnified Person shall be entitled, at its expense, to participate in any action, suit or proceeding, the defense of which has been assumed by the indemnifying Interconnection Party. Notwithstanding the foregoing, the indemnifying Interconnection Party (i) shall not be entitled to assume and control the defense of any such action, suit or proceedings if and to the extent that, in the opinion of the Indemnified Person and its counsel, such action, suit or proceeding involves the potential imposition of criminal liability on the Indemnified Person, or there exists a conflict or adversity of interest between the Indemnified Person and the indemnifying Interconnection Party, in such event the indemnifying Interconnection Party shall pay the reasonable expenses of the Indemnified Person, and (ii) shall not settle or consent to the entry of any judgment in any action, suit or proceeding without the consent of the Indemnified Person, which shall not be unreasonably withheld, conditioned or delayed.

14.3 Indemnified Person:

If an Indemnified Person is entitled to indemnification under this Section 14 as a result of a claim by a third party, and the indemnifying Interconnection Party fails, after notice and reasonable opportunity to proceed under Section 14.2 of this Appendix 2, to assume the defense of such claim, such Indemnified Person may at the expense of the indemnifying Interconnection Party contest, settle or consent to the entry of any judgment with respect to, or pay in full, such claim.

14.4 Amount Owing:

If an indemnifying Interconnection Party is obligated to indemnify and hold any Indemnified Person harmless under this Section 14, the amount owing to the Indemnified Person shall be the amount of such Indemnified Person's actual Loss, net of any insurance or other recovery.

14.5 Limitation on Damages:

Except as otherwise provided in this Section 14, the liability of an Interconnection Party under this Appendix 2 shall be limited to direct actual damages, and all other damages at law are waived. Under no circumstances shall any Interconnection Party or its Affiliates, directors, officers, employees and agents, or any of them, be liable to another Interconnection Party, whether in tort, contract or other basis in law or equity for any special, indirect punitive, exemplary or consequential damages, including lost profits. The limitations on damages specified in this Section 14.5 are without regard to the cause or causes related thereto, including the negligence of any Interconnection Party, whether such negligence be sole, joint or concurrent, or active or passive. This limitation on damages shall not affect any Interconnection Party's rights to obtain equitable relief as otherwise provided in this Appendix 2. The provisions of this Section 14.5 shall survive the termination or expiration of the Interconnection Service Agreement.

14.6 Limitation of Liability in Event of Breach:

An Interconnection Party ("Breaching Party") shall have no liability hereunder to the other Interconnection Parties, and the other Interconnection Parties hereby release the Breaching Party, for all claims or damages that either of them incurs that are associated with any interruption in the availability of the Customer Facility, Interconnection Facilities, Transmission System or Interconnection Service or damages to an Interconnection Party's facilities, except to the extent such interruption or damage is caused by the Breaching Party's gross negligence or willful misconduct in the performance of its obligations under this Interconnection Service Agreement (including Appendix 2).

14.7 Limited Liability in Emergency Conditions:

Except as otherwise provided in the Tariff or the Operating Agreement, no Interconnection Party shall be liable to any other Interconnection Party for any action that it takes in responding to an Emergency Condition, so long as such action is made in good faith, is consistent with Good Utility Practice and is not contrary to the directives of the Transmission Provider or of the Interconnected Transmission Owner with respect to such Emergency Condition. Notwithstanding the above, Interconnection Customer shall be liable in the event that it fails to comply with any instructions

of Transmission Provider or the Interconnected Transmission Owner related to an Emergency Condition.

15 Breach, Cure And Default

15.1 Breach:

A Breach of this Interconnection Service Agreement shall include:

(a) The failure to pay any amount when due;

(b) The failure to comply with any material term or condition of this Appendix 2 or of the other portions of the Interconnection Service Agreement, including but not limited to any material breach of a representation, warranty or covenant (other than in subsections (a) and (c)-(e) of this Section) made in this Appendix 2;

(c) Assignment of the Interconnection Service Agreement in a manner inconsistent with its terms;

(d) Failure of an Interconnection Party to provide access rights, or an Interconnection Party's attempt to revoke or terminate access rights, that are provided under this Appendix 2; or

(e) Failure of an Interconnection Party to provide information or data required to be provided under this Appendix 2 to another Interconnection Party for such other Interconnection Party to satisfy its obligations under this Appendix 2.

15.2 Continued Operation:

In the event of a Breach or Default by either Interconnected Entity, and subject to termination of the Interconnection Service Agreement under Section 16 of this Appendix 2, the Interconnected Entities shall continue to operate and maintain, as applicable, such DC power systems, protection and Metering Equipment, telemetering equipment, SCADA equipment, transformers, Secondary Systems, communications equipment, building facilities, software, documentation, structural components, and other facilities and appurtenances that are reasonably necessary for Transmission Provider and the Interconnected Transmission Owner to operate and maintain the Transmission System and the Transmission Owner Interconnection Facilities and for Interconnection Customer to operate and maintain the Customer Facility and the Customer Interconnection Facilities, in a safe and reliable manner.

15.3 Notice of Breach:

An Interconnection Party not in Breach shall give written notice of an event of Breach to the Breaching Party, to Transmission Provider and to other persons that the Breaching Party identifies in writing to the other Interconnection Party in advance. Such notice shall set forth, in reasonable detail, the nature of the Breach, and where known and applicable, the steps necessary to cure such Breach. In the event of a Breach by Interconnection Customer, Transmission Provider and the

Interconnected Transmission Owner agree to provide notice of such Breach, at the same time and in the same manner as its notice to Interconnection Customer, to any Project Finance Entity provided that the Interconnection Customer has provided the notifying Interconnection Party with notice of an assignment to such Project Finance Entity(ies) and identifies such Project Finance Entity(ies) as contacts for notice purposes pursuant to Section 21 of this Appendix 2.

15.4 Cure and Default:

An Interconnection Party that commits a Breach and does not take steps to cure the Breach pursuant to this Section 15.4 is in Default of this Appendix 2 and of the Interconnection Service Agreement.

15.4.1 Cure of Breach:

Except for the event of Breach set forth in Section 15.1(a) above, the Breaching Interconnection Party (a) may cure the Breach within thirty days from the receipt of such notice; or (b) if the Breach cannot be cured within thirty (30) days, may commence in good faith all steps that are reasonable and appropriate to cure the Breach within such thirty day time period and thereafter diligently pursue such action to completion. In an event of Breach set forth in Section 15.1(a), the Breaching Interconnection Party may cure the Breach within five (5) days from the receipt of notice of the Breach.

15.5 Right to Compel Performance:

Notwithstanding the foregoing, upon the occurrence of an event of Default, a non-Defaulting Interconnection Party shall be entitled to (a) commence an action to require the Defaulting Interconnection Party to remedy such Default and specifically perform its duties and obligations hereunder in accordance with the terms and conditions hereof, (b) withhold payments, (c) suspend performance hereunder, and (d) exercise such other rights and remedies as it may have in equity or at law; provided, however, that the Transmission Provider shall not terminate the Interconnection Service Agreement due to the failure of Interconnection Customer to make a payment hereunder unless such failure could reasonably be expected to have a material adverse effect on the Interconnected Transmission Owner.

15.6 Remedies Cumulative:

Subject to Section 20.1, no remedy conferred by any provision of this Appendix 2 is intended to be exclusive of any other remedy and each and every remedy shall be cumulative and shall be in addition to every other remedy given hereunder or now or hereafter existing at law or in equity or by statute or otherwise. The election of any one or more remedies shall not constitute a waiver of the right to pursue other available remedies.

16 Termination

16.1 Termination:

This Interconnection Service Agreement and Interconnection Service under this Interconnection Service Agreement may be terminated by the following means:

16.1.1 By Mutual Consent:

Interconnection Service may be terminated as of the date on which the Interconnection Parties mutually agree to terminate the Interconnection Service Agreement.

16.1.2 By Interconnection Customer:

Interconnection Customer may unilaterally terminate the Interconnection Service Agreement pursuant to Applicable Laws and Regulations upon providing Transmission Provider and the Interconnected Transmission Owner sixty (60) days prior written notice thereof, provided that Interconnection Customer is not then in Default under the Interconnection Service Agreement.

16.1.3 Upon Default of Interconnection Customer:

Transmission Provider may terminate the Interconnection Service Agreement upon the Default of Interconnection Customer of its obligations under the Interconnection Service Agreement by providing Interconnection Customer and the Interconnected Transmission Owner prior written notice of termination; provided, however, that Transmission Provider shall not terminate the Interconnection Service Agreement due to the failure of Interconnection Customer to make a payment hereunder unless such failure could reasonably be expected to have a material adverse effect on the Interconnected Transmission Owner.

16.2 Disposition of Facilities Upon Termination

16.2.1 Disconnection:

Upon termination of the Interconnection Service Agreement in accordance with this Section 16, Transmission Provider and/or the Interconnected Transmission Owner shall, in coordination with Interconnection Customer, physically disconnect the Customer Facility from the Transmission System, except to the extent otherwise allowed by this Appendix 2.

16.2.2 Network Facilities:

At the time of termination, the Transmission Provider and the Interconnected Entities shall keep in place any portion of the Interconnection Facilities that the Transmission Provider deems necessary for the safety, integrity and/or reliability of the Transmission System. Otherwise, Transmission Provider may, in its discretion, within 30 days following termination of Interconnection Service, require the removal of all or any part of the Interconnection Facilities.

16.2.2.1 In the event that (i) the Interconnection Service Agreement and Interconnection Service under this Appendix 2 are terminated and (ii) Transmission Provider determines that some or all of the Interconnection Facilities that are owned by the Interconnection Customer are necessary for the safety, integrity and/or reliability of the Transmission System,

Interconnection Customer, subject to Applicable Laws and Regulations, shall transfer to the Interconnected Transmission Owner title to the Interconnection Facilities that Transmission Provider has determined to be necessary for the safety, integrity and/or reliability of the Transmission System.

16.2.2.2 In the event that removal of some or all of the Interconnection Facilities is necessary to maintain compliance with Applicable Standards, Interconnection Customer shall be responsible for the costs of any such removal. Interconnection Customer shall have the right to take or retain title to equipment and/or facilities that are removed pursuant to this section; alternatively, in the event that the Interconnection Customer does not wish to retain title to removed equipment and/or facilities that it owns, the Interconnected Transmission Owner may elect to pay the Interconnection Customer a mutually agreed amount to acquire and own such equipment and/or facilities.

16.2.3 Request for Disposition Determination:

Interconnection Customer may request a determination from the Transmission Provider whether any Interconnection Facilities will be removed in the event of any termination of Interconnection Service to the Customer Facility within the following year. Transmission Provider shall respond to that request no later than sixty (60) days after receipt.

16.3 FERC Approval:

Notwithstanding any other provision of this Appendix 2, no termination hereunder shall become effective until the Interconnected Entities and/or Transmission Provider have complied with all Applicable Laws and Regulations applicable to such termination, including the filing with the FERC of a notice of termination of the Interconnection Service Agreement, and acceptance of such notice for filing by the FERC.

16.4 Survival of Rights:

Termination of this Interconnection Service Agreement shall not relieve any Interconnection Party of any of its liabilities and obligations arising under this Interconnection Service Agreement (including Appendix 2) prior to the date on which termination becomes effective, and each Interconnection Party may take whatever judicial or administrative actions it deems desirable or necessary to enforce its rights hereunder. Applicable provisions of this Appendix 2 will continue in effect after termination to the extent necessary to provide for final billings, billing adjustments, and the determination and enforcement of liability and indemnification obligations arising from events or acts that occurred while the Interconnection Service Agreement was in effect.

17 Confidentiality:

Information is Confidential Information only if it is clearly designated or marked in writing as confidential on the face of the document, or, if the information is conveyed orally or by inspection, if the Interconnection Party providing the information orally informs the Interconnection Party receiving the information that the information is confidential. If requested by any Interconnection

Party, the disclosing Interconnection Party shall provide in writing the basis for asserting that the information referred to in this section warrants confidential treatment, and the requesting Interconnection Party may disclose such writing to an appropriate Governmental Authority. Any Interconnection Party shall be responsible for the costs associated with affording confidential treatment to its information.

17.1 Term:

During the term of the Interconnection Service Agreement, and for a period of three (3) years after the expiration or termination of the Interconnection Service Agreement, except as otherwise provided in this Section 17, each Interconnection Party shall hold in confidence, and shall not disclose to any person, Confidential Information provided to it by any other Interconnection Party.

17.2 Scope:

Confidential Information shall not include information that the receiving Interconnection Party can demonstrate: (i) is generally available to the public other than as a result of a disclosure by the receiving Interconnection Party; (ii) was in the lawful possession of the receiving Interconnection Party on a non-confidential basis before receiving it from the disclosing Interconnection Party; (iii) was supplied to the receiving Interconnection Party without restriction by a third party, who, to the knowledge of the receiving Interconnection Party, after due inquiry, was under no obligation to the disclosing Interconnection Party to keep such information confidential; (iv) was independently developed by the receiving Interconnection Party without reference to Confidential Information of the disclosing Interconnection Party; (v) is, or becomes, publicly known, through no wrongful act or omission of the receiving Interconnection Party or breach of this Appendix 2; or (vi) is required, in accordance with Section 17.7 of this Appendix 2, to be disclosed to any Governmental Authority or is otherwise required to be disclosed by law or subpoena, or is necessary in any legal proceeding establishing rights and obligations under the Interconnection Service Agreement. Information designated as Confidential Information shall no longer be deemed confidential if the Interconnection Party that designated the information as confidential notifies the other Interconnection Parties that it no longer is confidential.

17.3 Release of Confidential Information:

No Interconnection Party shall disclose Confidential Information to any other person, except to its Affiliates (limited by the Commission's Standards of Conduct requirements), subcontractors, employees, consultants or to parties who may be or considering providing financing to or equity participation in Interconnection Customer or to potential purchasers or assignees of Interconnection Customer, on a need-to-know basis in connection with the Interconnection Service Agreement, unless such person has first been advised of the confidentiality provisions of this Section 17 and has agreed to comply with such provisions. Notwithstanding the foregoing, an Interconnection Party providing Confidential Information to any person shall remain primarily responsible for any release of Confidential Information in contravention of this Section 17.

17.4 Rights:

Each Interconnection Party retains all rights, title, and interest in the Confidential Information that it discloses to any other Interconnection Party. An Interconnection Party's disclosure to another Interconnection Party of Confidential Information shall not be deemed a waiver by any Interconnection Party or any other person or entity of the right to protect the Confidential Information from public disclosure.

17.5 No Warranties:

By providing Confidential Information, no Interconnection Party makes any warranties or representations as to its accuracy or completeness. In addition, by supplying Confidential Information, no Interconnection Party obligates itself to provide any particular information or Confidential Information to any other Interconnection Party nor to enter into any further agreements or proceed with any other relationship or joint venture.

17.6 Standard of Care:

Each Interconnection Party shall use at least the same standard of care to protect Confidential Information it receives as the Interconnection Party uses to protect its own Confidential Information from unauthorized disclosure, publication or dissemination. Each Interconnection Party may use Confidential Information solely to fulfill its obligations to the other Interconnection Parties under the Interconnection Service Agreement or to comply with Applicable Laws and Regulations.

17.7 Order of Disclosure:

If a Governmental Authority with the right, power, and apparent authority to do so requests or requires an Interconnection Party, by subpoena, oral deposition, interrogatories, requests for production of documents, administrative order, or otherwise, to disclose Confidential Information, that Interconnection Party shall provide the Interconnection Party that provided the information with prompt prior notice of such request(s) or requirement(s) so that the providing Interconnection Party may seek an appropriate protective order or waive compliance with the terms of this Appendix 2 or the Interconnection Service Agreement. Notwithstanding the absence of a protective order or agreement, or waiver, the Interconnection Party that is subjected to the request or order may disclose such Confidential Information which, in the opinion of its counsel, the Interconnection Party is legally compelled to disclose. Each Interconnection Party shall use Reasonable Efforts to obtain reliable assurance that confidential treatment will be accorded any Confidential Information so furnished.

17.8 Termination of Interconnection Service Agreement:

Upon termination of the Interconnection Service Agreement for any reason, each Interconnection Party shall, within ten (10) calendar days of receipt of a written request from another party, use Reasonable Efforts to destroy, erase, or delete (with such destruction, erasure and deletion certified in writing to the requesting party) or to return to the other party, without retaining copies thereof, any and all written or electronic Confidential Information received from the requesting party.

17.9 Remedies:

The Interconnection Parties agree that monetary damages would be inadequate to compensate an Interconnection Party for another Interconnection Party's Breach of its obligations under this Section 17. Each Interconnection Party accordingly agrees that the other Interconnection Parties shall be entitled to equitable relief, by way of injunction or otherwise, if the first Interconnection Party breaches or threatens to breach its obligations under this Section 17, which equitable relief shall be granted without bond or proof of damages, and the receiving Interconnection Party shall not plead in defense that there would be an adequate remedy at law. Such remedy shall not be deemed to be an exclusive remedy for the breach of this Section 17, but shall be in addition to all other remedies available at law or in equity. The Interconnection Parties further acknowledge and agree that the covenants contained herein are necessary for the protection of legitimate business interests and are reasonable in scope. No Interconnection Party, however, shall be liable for indirect, incidental or consequential or punitive damages of any nature or kind resulting from or arising in connection with this Section 17.

17.10 Disclosure to FERC or its Staff:

Notwithstanding anything in this Section 17 to the contrary, and pursuant to 18 C.F.R. § 1b.20, if FERC or its staff, during the course of an investigation or otherwise, requests information from one of the Interconnection Parties that is otherwise required to be maintained in confidence pursuant to this Interconnection Service Agreement, the Interconnection Party, shall provide the requested information to FERC or its staff, within the time provided for in the request for information. In providing the information to FERC or its staff, the Interconnection Party must, consistent with 18 C.F.R. § 388.122, request that the information be treated as confidential and non-public by FERC and its staff and that the information be withheld from public disclosure. Interconnection Parties are prohibited from notifying the other Interconnection Parties prior to the release of the Confidential Information to the Commission or its staff. An Interconnection Party shall notify the other Interconnection Parties to the Interconnection Service Agreement when it is notified by FERC or its staff that a request to release Confidential Information has been received by FERC, at which time any of the Interconnection Parties may respond before such information would be made public, pursuant to 18 C.F.R. § 388.112.

17.11

Subject to the exception in Section 17.10 of this Appendix 2, no Interconnection Party shall disclose Confidential Information of another Interconnection Party to any person not employed or retained by the Interconnection Party, except to the extent disclosure is (i) required by law; (ii) reasonably deemed by the disclosing Interconnection Party to be required in connection with a dispute between or among the Interconnection Parties, or the defense of litigation or dispute; (iii)_ otherwise permitted by consent of the Interconnection Party that provided such Confidential Information, such consent not to be unreasonably withheld; or (iv) necessary to fulfill its obligations under this Interconnection Service Agreement or as a transmission service provider or a Control Area operator including disclosing the Confidential Information to an RTO or ISO or to a regional or national reliability organization. Prior to any disclosures of another Interconnection Party's Confidential Information under this subparagraph, the disclosing Interconnection Party

shall promptly notify the other Interconnection Parties in writing and shall assert confidentiality and cooperate with the other Interconnection Parties in seeking to protect the Confidential Information from public disclosure by confidentiality agreement, protective order or other reasonable measures.

17.12

This provision shall not apply to any information that was or is hereafter in the public domain (except as a result of a Breach of this provision).

17.13 Return or Destruction of Confidential Information:

If an Interconnection Party provides any Confidential Information to another Interconnection Party in the course of an audit or inspection, the providing Interconnection Party may request the other party to return or destroy such Confidential Information after the termination of the audit period and the resolution of all matters relating to that audit. Each Interconnection Party shall make Reasonable Efforts to comply with any such requests for return or destruction within ten days of receiving the request and shall certify in writing to the other Interconnection Party that it has complied with such request.

18 Subcontractors

18.1 Use of Subcontractors:

Nothing in this Appendix 2 shall prevent the Interconnection Parties from utilizing the services of subcontractors as they deem appropriate to perform their respective obligations hereunder, provided, however, that each Interconnection Party shall require its subcontractors to comply with all applicable terms and conditions of this Appendix 2 in providing such services.

18.2 Responsibility of Principal:

The creation of any subcontract relationship shall not relieve the hiring Interconnection Party of any of its obligations under this Appendix 2. Each Interconnection Party shall be fully responsible to the other Interconnection Parties for the acts and/or omissions of any subcontractor it hires as if no subcontract had been made.

18.3 Indemnification by Subcontractors:

To the fullest extent permitted by law, an Interconnection Party that uses a subcontractor to carry out any of the Interconnection Party's obligations under this Appendix 2 shall require each of its subcontractors to indemnify, hold harmless and defend each other Interconnection Party, its representatives and assigns from and against any and all claims and/or liability for damage to property, injury to or death of any person, including the employees of any Interconnection Party or of any Affiliate of any Interconnection Party, or any other liability incurred by the other Interconnection Party or any of its Affiliates, including all expenses, legal or otherwise, to the extent caused by any act or omission, negligent or otherwise, by such subcontractor and/or its

officers, directors, employees, agents and assigns, that arises out of or is connected with the operation of the facilities of either Interconnected Entity described in this Appendix 2; provided, however, that no Interconnection Party or Affiliate thereof shall be entitled to indemnity under this Section 18.3 in respect of any injury, loss, or damage to the extent that such loss, injury, or damage results from the negligence or willful misconduct of the Interconnection Party or Affiliate seeking indemnity.

18.4 Subcontractors Not Beneficiaries:

No subcontractor is intended to be, or shall be deemed to be, a third-party beneficiary of an Interconnection Service Agreement.

19 Information Access And Audit Rights

19.1 Information Access:

Consistent with Applicable Laws and Regulations, each Interconnection Party shall make available such information and/or documents reasonably requested by another Interconnection Party that are necessary to (i) verify the costs incurred by the other Interconnection Party for which the requesting Interconnection Party is responsible under this Appendix 2 and (ii) carry out obligations and responsibilities under this Appendix 2, provided that the Interconnection Parties shall not use such information for purposes other than those set forth in this Section 19.1 and to enforce their rights under this Appendix 2.

19.2 Reporting of Non-Force Majeure Events:

Each Interconnection Party shall notify the other Interconnection Parties when it becomes aware of its inability to comply with the provisions of this Appendix 2 for a reason other than an event of force majeure as defined in Section 9.4 of this Appendix 2. The parties agree to cooperate with each other and provide necessary information regarding such inability to comply, including, but not limited to, the date, duration, reason for the inability to comply, and corrective actions taken or planned to be taken with respect to such inability to comply. Notwithstanding the foregoing, notification, cooperation or information provided under this Section shall not entitle the receiving Interconnection Party to allege a cause of action for anticipatory breach of the Interconnection Service Agreement.

19.3 Audit Rights:

Subject to the requirements of confidentiality under Section 17 of this Appendix 2, each Interconnection Party shall have the right, during normal business hours, and upon prior reasonable notice to the pertinent other Interconnection Party, to audit at its own expense the other Interconnection Party's accounts and records pertaining to such Interconnection Party's performance and/or satisfaction of obligations arising under this Appendix 2. Any audit authorized by this Section shall be performed at the offices where such accounts and records are maintained and shall be limited to those portions of such accounts and records that relate to obligations under this Appendix 2. Any request for audit shall be presented to the Interconnection Party to be audited

not later than twenty-four months after the event as to which the audit is sought. Each Interconnection Party shall preserve all records held by it for the duration of the audit period.

20 Disputes

20.1 Submission:

Any claim or dispute that any Interconnection Party may have against another arising out of the Interconnection Service Agreement may be submitted for resolution in accordance with the dispute resolution provisions of the Tariff.

20.2 Rights Under The Federal Power Act:

Nothing in this Section shall restrict the rights of any Interconnection Party to file a complaint with FERC under relevant provisions of the Federal Power Act.

20.3 Equitable Remedies:

Nothing in this Section shall prevent any Interconnection Party from pursuing or seeking any equitable remedy available to it under Applicable Laws and Regulations.

21 Notices

21.1 General:

Any notice, demand or request required or permitted to be given by any Interconnection Party to another and any instrument required or permitted to be tendered or delivered by any Interconnection Party in writing to another may be so given, tendered or delivered, by recognized national courier, or by depositing the same with the United States Postal Service with postage prepaid, for delivery by certified or registered mail, addressed to the Interconnection Party, or personally delivered to the Interconnection Party, at the address specified in the Interconnection Service Agreement. Such notices, if agreed to by the Interconnection Parties, may be made via electronic means, with e-mail confirmation of delivery.

21.2 Emergency Notices:

Moreover, notwithstanding the foregoing, any notice hereunder concerning an Emergency Condition or other occurrence requiring prompt attention, or as necessary during day-to-day operations, may be made by telephone or in person, provided that such notice is confirmed in writing promptly thereafter. Notice in an Emergency Condition, or as necessary during day-to-day operations, shall be provided (i) if by the Interconnected Transmission Owner, to the shift supervisor at, as applicable, a Generation Interconnection Customer's Customer Facility or a Transmission Interconnection Customer's control center; and (ii) if by the Interconnection Customer, to the shift supervisor at the Interconnected Transmission Owner's transmission control center.

21.3 Operational Contacts:

Each Interconnection Party shall designate, and provide to each other Interconnection Party contact information concerning, a representative to be responsible for addressing and resolving operational issues as they arise during the term of the Interconnection Service Agreement.

22 Miscellaneous

22.1 Regulatory Filing:

In the event that this Interconnection Service Agreement contains any terms that deviate materially from the form included in Attachment O of the Tariff, Transmission Provider shall file the Interconnection Service Agreement on behalf of itself and the Interconnected Transmission Owner with FERC as a service schedule under the Tariff within thirty days after execution. Interconnection Customer may request that any information so provided be subject to the confidentiality provisions of Section 17 of this Appendix 2. An Interconnection Customer shall have the right, with respect to any Interconnection Service Agreement tendered to it, to request (a) dispute resolution under Section 12 of the Tariff or, if concerning the Regional Transmission Expansion Plan, consistent with Schedule 5 of the Operating Agreement, or (b) that Transmission Provider file the agreement unexecuted with the Commission. With the filing of any unexecuted Interconnection Service Agreement, Transmission Provider may, in its discretion, propose to FERC a resolution of any or all of the issues in dispute between or among the Interconnection Parties.

22.2 Waiver:

Any waiver at any time by an Interconnection Party of its rights with respect to a Breach or Default under this Interconnection Service Agreement or with respect to any other matters arising in connection with this Appendix 2, shall not be deemed a waiver or continuing waiver with respect to any subsequent Breach or Default or other matter.

22.3 Amendments and Rights Under the Federal Power Act:

This Interconnection Service Agreement may be amended or supplemented only by a written instrument duly executed by all Interconnection Parties. An amendment to the Interconnection Service Agreement shall become effective and a part of this Interconnection Service Agreement upon satisfaction of all Applicable Laws and Regulations. Notwithstanding the foregoing, nothing contained in this Interconnection Service Agreement shall be construed as affecting in any way any of the rights of any Interconnection Party with respect to changes in applicable rates or charges under Section 205 of the Federal Power Act and/or FERC's rules and regulations thereunder, or any of the rights of any Interconnection Party under Section 206 of the Federal Power Act and/or FERC's rules and regulations thereunder. The terms and conditions of this Interconnection Service Agreement and every appendix referred to therein shall be amended, as mutually agreed by the Interconnection Parties, to comply with changes or alterations made necessary by a valid applicable order of any Governmental Authority having jurisdiction hereof.

22.4 Binding Effect:

This Interconnection Service Agreement, including this Appendix 2, and the rights and obligations thereunder shall be binding upon, and shall inure to the benefit of, the successors and assigns of the Interconnection Parties.

22.5 Regulatory Requirements:

Each Interconnection Party's performance of any obligation under this Interconnection Service Agreement for which such party requires approval or authorization of any Governmental Authority shall be subject to its receipt of such required approval or authorization in the form and substance satisfactory to the receiving Interconnection Party, or the Interconnection Party making any required filings with, or providing notice to, such Governmental Authorities, and the expiration of any time period associated therewith. Each Interconnection Party shall in good faith seek, and shall use Reasonable Efforts to obtain, such required authorizations or approvals as soon as reasonably practicable.

23 Representations And Warranties

23.1 General:

Each Interconnected Entity hereby represents, warrants and covenants as follows with these representations, warranties, and covenants effective as to the Interconnected Entity during the time the Interconnection Service Agreement is effective:

23.1.1 Good Standing:

Such Interconnected Entity is duly organized or formed, as applicable, validly existing and in good standing under the laws of its State of organization or formation, and is in good standing under the laws of the respective State(s) in which it is incorporated and operates as stated in the Interconnection Service Agreement.

23.1.2 Authority:

Such Interconnected Entity has the right, power and authority to enter into the Interconnection Service Agreement, to become a party hereto and to perform its obligations hereunder. The Interconnection Service Agreement is a legal, valid and binding obligation of such Interconnected Entity, enforceable against such Interconnected Entity in accordance with its terms, except as the enforceability thereof may be limited by applicable bankruptcy, insolvency, reorganization or other similar laws affecting creditors' rights generally and by general equitable principles (regardless of whether enforceability is sought in a proceeding in equity or at law).

23.1.3 No Conflict:

The execution, delivery and performance of the Interconnection Service Agreement does not violate or conflict with the organizational or formation documents, or bylaws or operating

agreement, of the Interconnected Entity, or with any judgment, license, permit, order, material agreement or instrument applicable to or binding upon the Interconnected Entity or any of its assets.

23.1.4 Consent and Approval:

Such Interconnected Entity has sought or obtained, or, in accordance with the Interconnection Service Agreement will seek or obtain, each consent, approval, authorization, order, or acceptance by any Governmental Authority in connection with the execution, delivery and performance of the Interconnection Service Agreement and it will provide to any Governmental Authority notice of any actions under this Appendix 2 that are required by Applicable Laws and Regulations.

24 Tax Liability

24.1 Safe Harbor Provisions:

This Section 24.1 is applicable only to Generation Interconnection Customers. Provided that Interconnection Customer agrees to conform to all requirements of the Internal Revenue Service ("IRS") (e.g., the "safe harbor" provisions of IRS Notice 2016-36, 2016-25 I.R.B. (6/20/2016)) that would confer nontaxable status on some or all of the transfer of property, including money, by Interconnection Customer to the Interconnected Transmission Owner for payment of the Costs of construction of the Transmission Owner Interconnection Facilities, the Interconnected Transmission Owner, based on such agreement and on current law, shall treat such transfer of property to it as nontaxable income and, except as provided in Section 24.4.2 below, shall not include income taxes in the Costs of Transmission Owner Interconnection Facilities that are payable by Interconnection Customer under the Interconnection Service Agreement or the Interconnection Construction Service Agreement. Interconnection Customer shall document its agreement to conform to IRS requirements for such non-taxable status in the Interconnection Service Agreement, the Interconnection Construction Service Agreement, and/or the Interim Interconnection Service Agreement.

24.2 Tax Indemnity:

Interconnection Customer shall indemnify the Interconnected Transmission Owner for any costs that Interconnected Transmission Owner incurs in the event that the IRS and/or a state department of revenue (State) determines that the property, including money, transferred by Interconnection Customer to the Interconnected Transmission Owner with respect to the construction of the Transmission Owner Interconnection Facilities is taxable income to the Interconnected Transmission Owner. Interconnection Customer shall pay to the Interconnected Transmission Owner, on demand, the amount of any income taxes that the IRS or a State assesses to the Interconnected Transmission Owner in connection with such transfer of property and/or money, plus any applicable interest and/or penalty charged to the Interconnected Transmission Owner. In the event that the Interconnected Transmission Owner chooses to contest such assessment, either at the request of Interconnection Customer or on its own behalf, and prevails in reducing or eliminating the tax, interest and/or penalty assessed against it, the Interconnected Transmission Owner shall refund to Interconnection Customer the excess of its demand payment made to the

Interconnected Transmission Owner over the amount of the tax, interest and penalty for which the Interconnected Transmission Owner is finally determined to be liable. Interconnection Customer's tax indemnification obligation under this section shall survive any termination of the Interconnection Service Agreement or Interconnection Construction Service Agreement.

24.3 Taxes Other Than Income Taxes:

Upon the timely request by Interconnection Customer, and at Interconnection Customer's sole expense, the Interconnected Transmission Owner shall appeal, protest, seek abatement of, or otherwise contest any tax (other than federal or state income tax) asserted or assessed against the Interconnected Transmission Owner for which Interconnection Customer may be required to reimburse Transmission Provider under the terms of this Appendix 2 or Part VI of the Tariff. Interconnection Customer shall pay to the Interconnected Transmission Owner on a periodic basis, as invoiced by the Interconnected Transmission Owner, the Interconnected Transmission Owner's documented reasonable costs of prosecuting such appeal, protest, abatement, or other contest. Interconnection Customer and the Interconnected Transmission Owner shall cooperate in good faith with respect to any such contest. Unless the payment of such taxes is a prerequisite to an appeal or abatement or cannot be deferred, no amount shall be payable by Interconnection Customer to the Interconnected Transmission Owner for such contested taxes until they are assessed by a final, non-appealable order by any court or agency of competent jurisdiction. In the event that a tax payment is withheld and ultimately due and payable after appeal, Interconnection Customer will be responsible for all taxes, interest and penalties, other than penalties attributable to any delay caused by the Interconnected Transmission Owner.

24.4 Income Tax Gross-Up

24.4.1 Additional Security:

In the event that Interconnection Customer does not provide the safe harbor documentation required under Section 24.1 prior to execution of the Interconnection Service Agreement, within 15 days after such execution, Transmission Provider shall notify Interconnection Customer in writing of the amount of additional Security that Interconnection Customer must provide. The amount of Security that a Transmission Interconnection Customer must provide initially pursuant to this Interconnection Service Agreement shall include any amounts described as additional Security under this Section 24.4 regarding income tax gross-up.

24.4.2 Amount:

The required additional Security shall be in an amount equal to the amount necessary to gross up fully for currently applicable federal and state income taxes the estimated Costs of Local Upgrades and Network Upgrades for which Interconnection Customer previously provided Security. Accordingly, the additional Security shall equal the amount necessary to increase the total Security provided to the amount that would be sufficient to permit the Interconnected Transmission Owner to receive and retain, after the payment of all applicable income taxes ("Current Taxes") and taking into account the present value of future tax deductions for depreciation that would be available as a result of the anticipated payments or property transfers (the "Present Value Depreciation

Amount"), an amount equal to the estimated Costs of Local Upgrades and Network Upgrades for which Interconnection Customer is responsible under the Interconnection Service Agreement. For this purpose, Current Taxes shall be computed based on the composite federal and state income tax rates applicable to the Interconnected Transmission Owner at the time the additional Security is received, determined using the highest marginal rates in effect at that time (the "Current Tax Rate"), and (ii) the Present Value Depreciation Amount shall be computed by discounting the Interconnected Transmission Owner's anticipated tax depreciation deductions associated with such payments or property transfers by its current weighted average cost of capital.

24.4.3 Time for Payment:

Interconnection Customer must provide the additional Security, in a form and with terms as required by Sections 212.4 of the Tariff, within 15 days after its receipt of Transmission Provider's notice under this section. The requirement for additional Security under this section shall be treated as a milestone included in the Interconnection Service Agreement pursuant to Section 217.5 of the Tariff.

24.5 Tax Status:

Each Party shall cooperate with the other to maintain the other Party's tax status. Nothing in this Interconnection Service Agreement or Part VI of the Tariff is intended to adversely affect any Interconnected Transmission Owner's tax exempt status with respect to the issuance of bonds including, but not limited to, local furnishing bonds.

SCHEDULE A

CUSTOMER FACILITY LOCATION/SITE PLAN

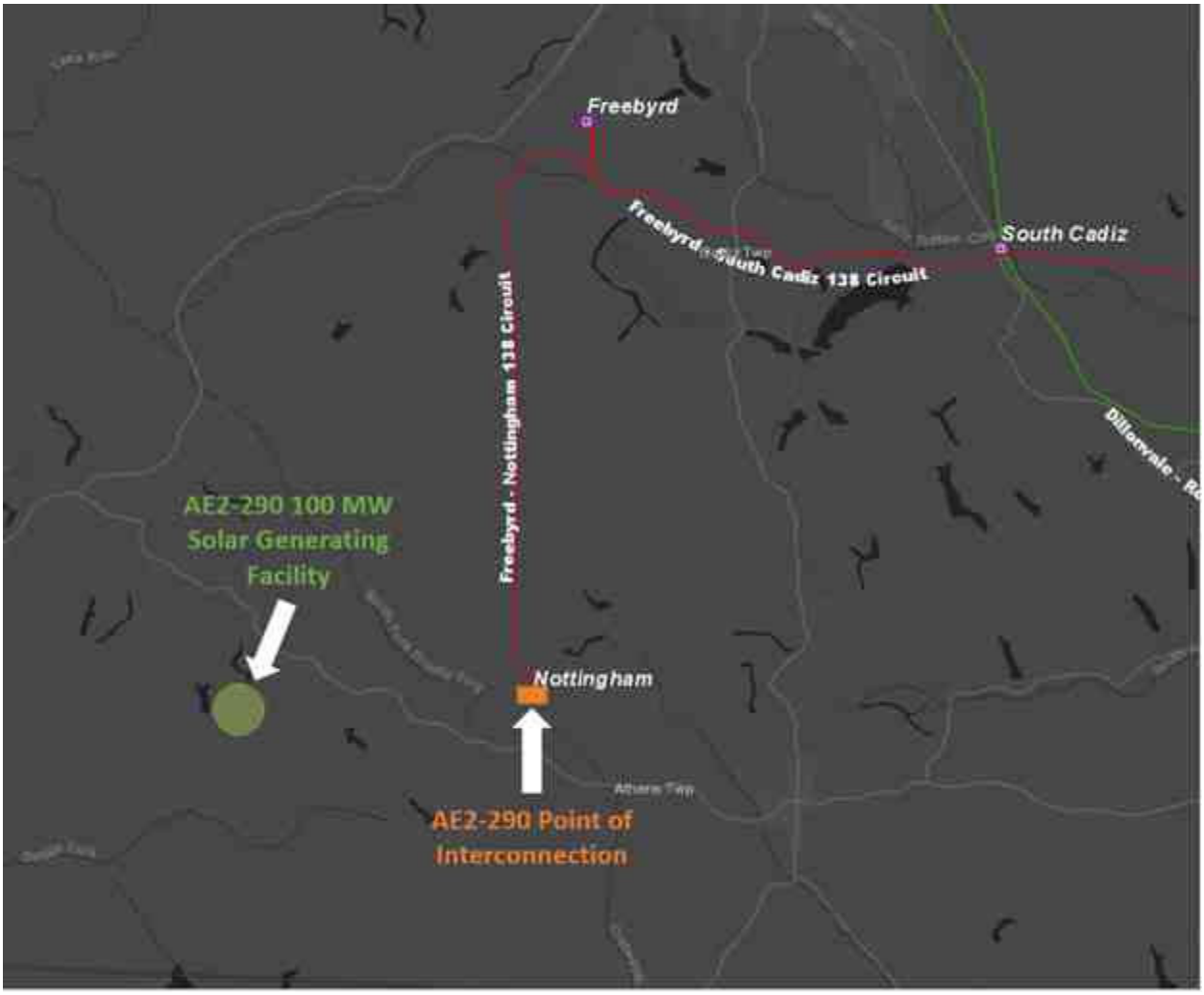

SCHEDULE B

SINGLE-LINE DIAGRAM

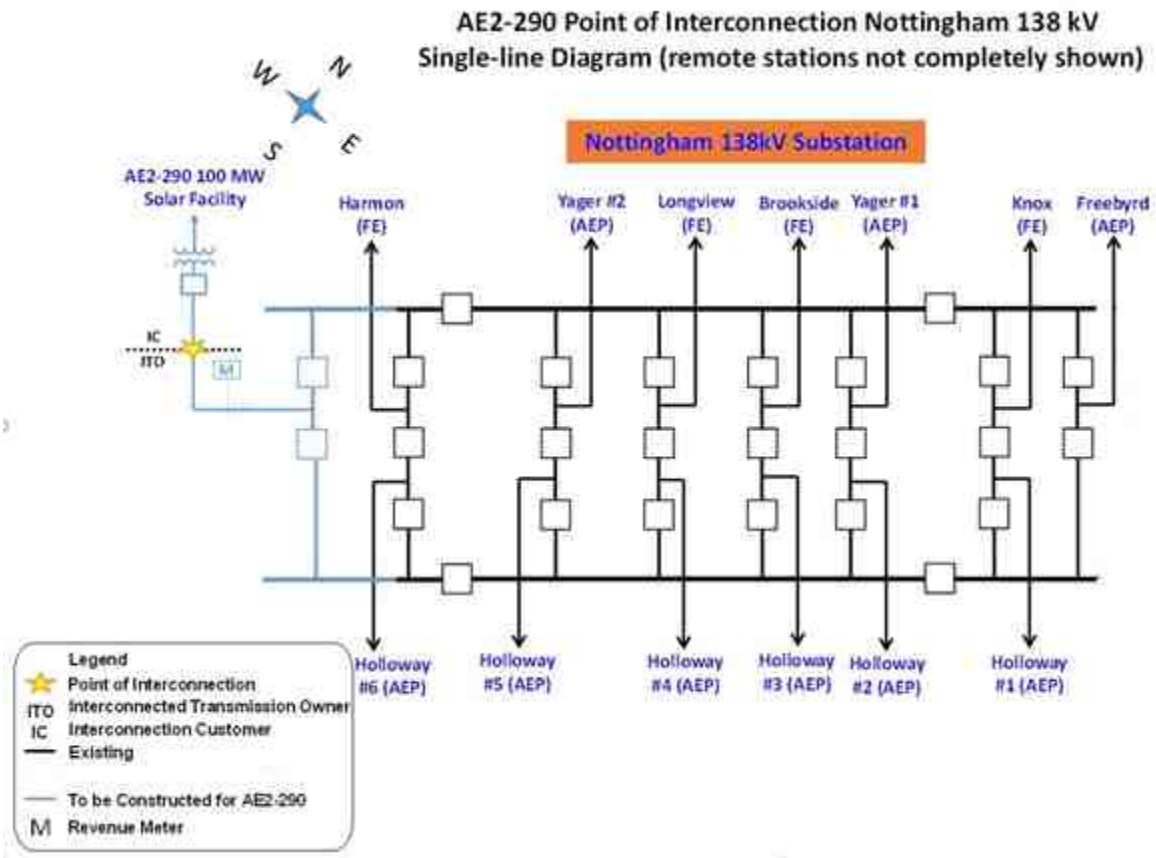

The Point of Interconnection is at the first (dead-end) structure outside (north-west) of the Nottingham 138 kV Station fence. Interconnected Transmission Owner owns the span from the Nottingham 138 kV Station to the dead-end, including the jumpers and structure at the dead-end. Interconnection Customer owns the span and structures from the dead-end to the AE2-290 generation collector station.

SCHEDULE C

LIST OF METERING EQUIPMENT

AEP will install and own primary and backup revenue metering at the Interconnection Customer's termination in the transmission switching substation as shown in Schedule B. AEP will submit all real and reactive power generation data to PJM as per PJM Manual 14 D.

The Interconnection Customer is responsible for installing equipment assuring that the following real time data is transmitted to PJM as per PJM Manual 14D:

a. Instantaneous net MW for the plant.
b. Instantaneous net MVAR for the plant.

The Interconnection Customer is responsible for installing equipment assuring the following non real-time data is transmitted to PJM as per PJM Manual 14D:

a. Hourly compensated MWh delivered by the plant.
b. Hourly compensated MWh received by the plant.
c. Hourly compensated MVARh delivered by the plant.
d. Hourly compensated MVARh received by the plant.

The Interconnection Customer will be required to install telemetry and communication equipment to provide real-time telemetry data to PJM as well as having the ability to receive and respond to PJM operational command and control signals. The requirements for this equipment are listed in Sections 8.1 through 8.5 of Appendix 2 of this ISA, as well as PJM Manuals 01 and 14D.

SCHEDULE D

APPLICABLE TECHNICAL REQUIREMENTS AND STANDARDS

Applicable Technical Requirements and Standards are set forth in the following documents that are posted on the PJM website:

- Requirements for Connection of New Facilities or Changes to Existing Facilities Connected to the AEP Transmission System, Revision 3 dated June 30, 2021;
- Standards and Expectations for Siting, Real Estate, Right-of-Way, and Environmental Permitting for Transmission Interconnection Projects, Version 2 dated August 20, 2020; and
- Independent Power Producer (IPP) Option to Build Guidelines, Revision 2 dated December 7, 2020.

To the extent that these Applicable Technical Requirements and Standards conflict with the terms and conditions of the Tariff or any other provision of this ISA, the Tariff and/or this ISA shall control.

SCHEDULE E

SCHEDULE OF CHARGES

None

SCHEDULE F

SCHEDULE OF NON-STANDARD TERMS & CONDITIONS

None

SCHEDULE G

INTERCONNECTION CUSTOMER'S AGREEMENT TO CONFORM WITH IRS SAFE HARBOR PROVISIONS FOR NON-TAXABLE STATUS

As provided in Section 24.1 of Appendix 2 to this ISA and subject to the requirements thereof, Interconnection Customer represents that it meets all qualifications and requirements as set forth in Section 118(a) and 118(b) of the Internal Revenue Code of 1986, as amended and interpreted by Notice 2016-36, 2016-25 I.R.B. (6/20/2016) (the "IRS Notice"). Interconnection Customer agrees to conform with all requirements of the safe harbor provisions specified in the IRS Notice, as they may be amended, as required to confer non-taxable status on some or all of the transfer of property, including money, by Interconnection Customer to Interconnected Transmission Owner with respect to the payment of the Costs of construction and installation of the Transmission Owner Interconnection Facilities specified in this ISA.

Nothing in Interconnection Customer's agreement pursuant to this Schedule G shall change Interconnection Customer's indemnification obligations under Section 24.2 of Appendix 2 to this ISA.

SCHEDULE H

INTERCONNECTION REQUIREMENTS FOR ALL WIND, SOLAR AND NON-SYNCHRONOUS GENERATION FACILITIES

A. Voltage Ride Through Requirements

The Customer Facility shall be designed to remain in service (not trip) for voltages and times as specified for the Eastern Interconnection in Attachment 1 of NERC Reliability Standard PRC-024-1, and successor Reliability Standards, for both high and low voltage conditions, irrespective of generator size,
subject to the permissive trip exceptions established in PRC-024-1 (and successor Reliability Standards).

B. Frequency Ride Through Requirements

The Customer Facility shall be designed to remain in service (not trip) for frequencies and times as specified in Attachment 2 of NERC Reliability Standard PRC-024-1, and successor Reliability Standards, for both high and low frequency condition, irrespective of generator size, subject to the permissive trip exceptions established in PRC-024-1 (and successor Reliability Standards).

C. Supervisory Control and Data Acquisition (SCADA) Capability

The wind, solar or non-synchronous generation facility shall provide SCADA capability to transmit data and receive instructions from the Transmission Provider to protect system reliability. The Transmission Provider and the wind, solar or non-synchronous generation facility Interconnection Customer shall determine what SCADA information is essential for the proposed wind, solar or non-synchronous generation facility, taking into account the size of the facility and its characteristics, location, and importance in maintaining generation resource adequacy and transmission system reliability in its area.

D. Meteorological Data Reporting Requirement (Applicable to wind generation facilities only)

The wind generation facility shall, at a minimum, be required to provide the Transmission Provider with site-specific meteorological data including:

- Temperature (degrees Fahrenheit)
- Wind speed (meters/second)
- Wind direction (degrees from True North)
- Atmosphere pressure (hectopascals)
- Forced outage data (wind turbine and MW unavailability)

E. Meteorological Data Reporting Requirement (Applicable to solar generation facilities

only)

The solar generation facility shall, at a minimum, be required to provide the Transmission Provider with site-specific meteorological data including:

- Temperature (degrees Fahrenheit)
- Irradiance
- Forced outage data

The Transmission Provider and Interconnection Customer may mutually agree to any additional meteorological data that are required for the development and deployment of a power production forecast. All requirements for meteorological and forced outage data must be commensurate with the power production forecasting employed by the Transmission Provider. Such additional mutually agreed upon requirements for meteorological and forced outage data are set forth below:
NOT APPLICABLE FOR THIS ISA

SCHEDULE I

INTERCONNECTION SPECIFICATIONS FOR AN ENERGY STORAGE RESOURCE

Not Required

SCHEDULE J

SCHEDULE OF TERMS AND CONDITIONS FOR SURPLUS INTERCONNECTION SERVICE

Not Required

SCHEDULE K

REQUIREMENTS FOR INTERCONNECTION SERVICE BELOW FULL ELECTRICAL GENERATING CAPABILITY

None

ATTACHMENT C

Executed Agreement to Amend

Docusign Envelope ID: 20116EC6-7419-8C48-83C5-096933BE45DA

AGREEMENT TO AMEND
By and Among
PJM Interconnection, L.L.C.
And
Nottingham Solar LLC
And
AEP Ohio Transmission Company, Inc.

PJM Queue No. AE2-290

This AGREEMENT TO AMEND ("Agreement to Amend") is entered into by and among PJM Interconnection, L.L.C. ("PJM" or "Transmission Provider") and the following entities (each, individually, a "Party," and collectively, the "Parties"):

Party Type	**Company Name**
Interconnection Customer	Nottingham Solar LLC
Party Type	**Company Name**
Interconnected Transmission Owner	AEP Ohio Transmission Company, Inc.

RECITALS

WHEREAS, the Service Agreements designated below have been entered into by and among the Parties listed above, and if a Federal Energy Regulatory Commission ("Commission") Docket No. is not listed below, the Service Agreement is conforming and reported to the Commission in PJM's Electric Quarterly Reports ("EQR").

Type of Service Agreement ("SA")	**SA No.**	**Effective Date**	**Docket No.**
Interconnection Service Agreement ("ISA")	6237	November 27, 2023	ER23-2931-000
Interconnection Construction Service Agreement ("ICSA")	6238	November 27, 2023	

WHEREAS, the following selected sections provide that the Service Agreements, or any part thereof, may not be amended, modified, or waived other than by a written document signed by all parties to the Service Agreements.

☐ Section 16.0 of the Generation Interconnection Agreement ("GIA")
☐ Section 2.4 of the Wholesale Market Participation Agreement ("WMPA")
X Section 16.0 of the Interconnection Service Agreement ("ISA")
☐ Section 5.2 of the Construction Service Agreement ("CSA")
X Section 12.0 of the Interconnection Construction Service Agreement ("ICSA")
☐ Section 13.0 of the Interim Interconnection Service Agreement ("IISA")
☐ Section 6.2 of the Upgrade Construction Service Agreement ("UCSA")
☐ Section 13.0 of the Engineering and Procurement Agreement ("E&P Agreement")
☐ Section 19 of the Cost Responsibility Agreement ("CRA")

Docusign Envelope ID: 20116EC6-7419-8C48-83C5-096933BE45DA

☐ Section 20 of the Necessary Studies Agreement ("NSA")
☐ Section 10.0 of the Network Upgrade Cost Responsibility Agreement ("NUCRA")

WHEREAS, by this Agreement to Amend, the Parties intend to amend the Service Agreements to reflect the changes listed in Appendix A hereto.

NOW, THEREFORE, for good and valuable consideration, the receipt of which is hereby acknowledged, and intending to be legally bound, the Parties hereby agree as follows:

1. Capitalized Terms.

   Capitalized terms not otherwise defined herein shall have the meaning assigned to such terms in the Service Agreements.

2. Authorization to Amend.

   The Parties acknowledge that PJM will utilize this Agreement to Amend to modify the aforementioned Service Agreements by making the changes listed herein. The Parties authorize PJM to file with the Commission or report into EQR, as applicable, the amended Service Agreements without the necessity of additional signatures from Interconnection Customer and Interconnected Transmission Owner.

3. Milestone Date Extension(s).

   Not Applicable

4. One-Time Option to Extend GIA Milestone.

   Not Applicable

5. Counterparts. This Agreement to Amend may be executed in one or more counterparts, each of which when so executed and delivered shall be an original but all of which shall together constitute one and the same instrument.

Except as set forth in this Agreement to Amend, the Service Agreements are unaffected and shall continue in full force and effect in accordance with their terms. In the event of conflict between this Agreement to Amend and the Service Agreements or any earlier amendments, the terms of this Agreement to Amend will prevail.

Docusign Envelope ID: 20116EC6-7419-8C48-83C5-096933BE45DA

IN WITNESS WHEREOF, the Parties' respective authorized representatives have executed this Agreement to Amend as of the date of the latest signature, and the amendments to the foregoing Service Agreements shall become effective as of the date established by the Commission.

PJM Queue No. AE2-290

Transmission Provider: PJM Interconnection, L.L.C.

By: Brent Reffner	Manager, Interconnection Construction Management	Sep 23, 2026
Name	Title	Date

Printed name of signer: Brent Reffner

Interconnection Customer: Nottingham Solar LLC

By: Zvi Tvizer	COO	Sep 22, 2026
Name	Title	Date

Printed name of signer: Zvi Tvizer

Interconnected Transmission Owner: AEP Ohio Transmission Company, Inc.

By: Kamran Ali	Vice President	Sep 23, 2026
Name	Title	Date

Printed name of signer: Kamran Ali

Docusign Envelope ID: 20116EC6-7419-8C48-83C5-096933BE45DA

APPENDIX A

Section Changed	Changed From	Changed To	Explanation
ISA, section 1.0 (Parties)	This ISA amends the Interconnection Service Agreement among the Parties, Service Agreement No. 6237, effective November 15, 2021, filed with and accepted by the Federal Energy Regulatory Commission in Docket No. ER22-658-000.	This ISA amends the Interconnection Service Agreement among the Parties, Service Agreement No. 6237, effective November 15, 2021, filed with and accepted by the Federal Energy Regulatory Commission in Docket No. ER22-658-000, as amended in Docket No. ER23-2931-000, effective November 27, 2023.	A sentence is modified to explain that this is an amended ISA.
ISA, section 6.1 (Site permits)	January 31, 2023	October 17, 2025	Revised to reflect suspension time and schedule.
ISA, section 6.2 (Acquisition of Major Electrical Equipment)	October 15, 2022	July 1, 2025	Revised to reflect suspension time and schedule.
ISA, section 6.3 (Substantial Site work completed)	June 30, 2023	March 16, 2026	Revised to reflect suspension time and schedule.
ISA, section 6.4 (Delivery of major electrical equipment)	September 30, 2023	June 16, 2026	Revised to reflect suspension time and schedule.
ISA, section 6.5	…	…	Delete duplicate section number.

Docusign Envelope ID: 20116EC6-7419-8C48-83C5-096933BE45DA

ISA, section 6.5 (Commercial Operation)	Commercial Operation. (i) On or before December 15, 2023, Interconnection Customer must demonstrate commercial operation of sixteen (16) generating units. (ii) On or before December 31, 2023, Interconnection Customer must demonstrate commercial operation of sixteen (16) generating units. Demonstrating commercial operation includes achieving Initial Operation in accordance with Section 1.4 of Appendix 2 to this ISA and making commercial sales or use of energy, as well as, if applicable, obtaining capacity qualification in accordance with the requirements of the Reliability Assurance Agreement Among Load Serving Entities in the PJM Region.	Commercial Operation. On or before December 15, 2026, Interconnection Customer must demonstrate commercial operation of all generating units. Demonstrating commercial operation includes achieving Initial Operation in accordance with Section 1.4 of Appendix 2 to this ISA and making commercial sales or use of energy, as well as, if applicable, obtaining capacity qualification in accordance with the requirements of the Reliability Assurance Agreement Among Load Serving Entities in the PJM Region.	Revised to reflect suspension time and schedule.
ISA, section 18.0 (Notices)	Interconnection Customer: Nottingham Solar LLC 400 Market Industrial Park, Suite 32 Wappinger Falls, NY 12590 alicia.scott@bqenergy.com Interconnected Transmission Owner: Robert Pennybaker, Director – System Interconnections American Electric Power Service Corporation 212 E 6th St. – 4th Floor Tulsa, OK 74119 rlpennybaker@aep.com	Interconnection Customer: Nottingham Solar LLC c/o Energix Renewables 1201 Wilson Blvd., Suite 2200 Arlington, VA 22209 Attn: Nottingham Development Team Wylie Levone - wylie.levone@energixrenewables.com Harshal Devani - harshal.devani@energixrenewables.com Notices-US@EnergixRenewables.com Legal-US@EnergixRenewables.com 703-373-7309 Interconnected Transmission Owner:	Interconnection Customer's contact information is modified to reflect an upstream ownership change. Interconnected Transmission Owner's contact information is updated.

Docusign Envelope ID: 20116EC6-7419-8C48-83C5-096933BE45DA

	Cc: John W. Seidensticker, Senior Counsel American Electric Power Service Corporation 1 Riverside Plaza – 29th Floor Columbus, OH 43215 jwseidensticker@aep.com	Interconnection Services American Electric Power Service Corporation 1 Riverside Plaza Columbus, OH 43215 Attn: Evan Wilcox - Managing Director, or successor Email: pjmrequest@aep.com Phone: 614-716-1000 With copies to: Assistant General Counsel – Transactions American Electric Power Service Corporation 1 Riverside Plaza Columbus, OH 43215 Email: legalnoticesinterconnections@aep.com	
ISA, Specifications, section 1.0(d)	100 MWac solar photovoltaic facility.	A solar Generating Facility consisting of 32 x 3.51 MW HEM FS3510M inverters, solar panels supporting 100 MWE. The Generating Facility will also include circuit breakers and/or switches required for the Generating Facility, protection and control relays and any associated enclosure and 1 x 75/105/125 MVA main power transformer with a high-side voltage of 138 kV.	The Customer Facility description is updated for better accuracy.
ICSA, section 1.0 (Parties)	…	This CSA amends the Interconnection Construction Service Agreement among PJM, Nottingham Solar LLC, and AEP Ohio	A sentence is added to explain that this

Docusign Envelope ID: 20116EC6-7419-8C48-83C5-096933BE45DA

		Transmission Company, Inc., Service Agreement No. 6238, effective November 27, 2023, and reported in PJM's Electric Quarterly Report.	is an amended ICSA.
ICSA, section 10.0 (Notices)	Interconnection Customer: Nottingham Solar LLC 400 Market Industrial Park, Suite 32 Wappinger Falls, NY 12590 alicia.scott@bqenergy.com Interconnected Transmission Owner: Robert Pennybaker, Director – System Interconnections American Electric Power Service Corporation 212 E 6th St. – 4th Floor Tulsa, OK 74119 rlpennybaker@aep.com Cc: John W. Seidensticker, Senior Counsel American Electric Power Service Corporation 1 Riverside Plaza – 29th Floor Columbus, OH 43215 jwseidensticker@aep.com	Interconnection Customer: Nottingham Solar LLC c/o Energix Renewables 1201 Wilson Blvd., Suite 2200 Arlington, VA 22209 Attn: Nottingham Development Team Wylie Levone - wylie.levone@energixrenewables.com Harshal Devani - harshal.devani@energixrenewables.com Notices-US@EnergixRenewables.com Legal-US@EnergixRenewables.com 703-373-7309 Interconnected Transmission Owner: Interconnection Services American Electric Power Service Corporation 1 Riverside Plaza Columbus, OH 43215 Attn: Evan Wilcox - Managing Director, or successor Email: pjmrequest@aep.com Phone: 614-716-1000 With copies to:	Interconnection Customer's contact information is modified to reflect an upstream ownership change. Interconnected Transmission Owner's contact information is updated.

Docusign Envelope ID: 20116EC6-7419-8C48-83C5-096933BE45DA

		Assistant General Counsel – Transactions American Electric Power Service Corporation 1 Riverside Plaza Columbus, OH 43215 Email: legalnoticesinterconnections@aep.com	